JSC–1117

Space Shuttle Systems Handbook

Volume I – Sections 1 through 9

Mission Operations Directorate
Systems Division

Revision E, DCN–6
August 14, 1996

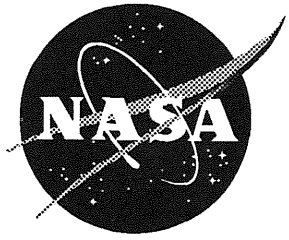

National Aeronautics and
Space Administration

Lyndon B. Johnson Space Center
Houston, Texas

SPACE SHUTTLE SYSTEMS HANDBOOK

REVISION E, DCN–6

PREFACE

This three–volume book contains systems level operational schematics for all of the space shuttle systems. These drawings were prepared by shuttle flight controllers in the Mission Operations Directorate, Systems Division, National Aeronautics and Space Administration, Lyndon B. Johnson Space Center, with the technical support of Integrated Documentation Services, Hernandez Engineering.

This document is intended to provide flight controllers and flight crews with reference material on shuttle systems operations during shuttle flight and simulation operations. It is also intended to be used as a training aid for shuttle hardware, software, and avionics systems operations. Caution should be exercised when using these systems drawings for other purposes. For detailed systems component and logic information, refer to the vendor drawing reference tables at the end of each handbook section.

The symbols and drawing layout standards used in this document are defined in the Mission Operations Directorate Drafting Standards, JSC–10506, Revision C, PCN–2, March 1991. The asterisks (*) that appear after some of the drawing numbers in the table of contents indicate that these schematics are carried onboard in the Systems Data Book during flight operations. Additionally, drawing numbers with letter designators should be used for specific vehicle references only as follows: B = 102, C = 103, D = 104, E = 105.

Comments regarding the contents of this document should be made to the book manager, DF52/Alan Simon, (713) 483–0158. Changes to the permanent distribution list may be made, and/or additional copies may be ordered by completing and returning the form on the following page.

Prepared by

Alan L. Simon
Book Manager, Systems Division

Approved

Jack Knight
Chief, Systems Division

ORDER/DISTRIBUTION CHANGE FORM

_____ Send all three baseline volumes of the SSSH, Revision E, dated December 21, 1990, to the individual/organizational title indicated below. (Note: DCN's are not included in the baseline volumes.)

_____ Send the indicated updates to the SSSH, Revision E, to the individual/ organizational title indicated below.

- _____ DCN–1, dated December 1, 1991
- _____ DCN–2, dated February 19, 1993
- _____ DCN–3, dated October 15, 1993
- _____ DCN–4, dated October 28, 1994
- _____ DCN–5, dated April 14, 1995
- _____ DCN–6, dated August 14, 1996

_____ Add the individual/organizational title indicated below to the distribution list. (This change will be effective with the next update of SSSH.)

_____ Change the number of copies sent to the individual/organizational title indicated below. (This change will be effective with the next update of SSSH.)

NASA Center or company name	Mail code	Title of individual or organizational title	Number of copies

Branch Chief's signature: _____

Branch Chief's name (print): _____

Branch Chief's phone number: _____

Branch Chief's mail code: _____

SPACE SHUTTLE SYSTEMS HANDBOOK

REV E–6

AUGUST 14, 1996

TABLE OF CONTENTS

Item	Title	Rev/DCN	Signoff date
Volume I – Sections 1 through 9			
Section 1 Bus Nomenclature			
Section 1 is reserved.			
Section 2 Electrical Power Distribution			
DWG 2.1* (Sheet 1 of 1)	EPS OVERVIEW	REV E–6	7/17/96
DWG 2.2 (Sheet 1 of 3)	MAIN BUS DC DISTRIBUTION	REV E–5	2/1/95
DWG 2.2 (Sheet 2 of 3)	MAIN BUS DC DISTRIBUTION	REV E–1	10/29/91
DWG 2.2 (Sheet 3 of 3)	AC/DC UTILITY OUTLETS	REV E–2	12/17/92
DWG 2.3 (Sheet 1 of 1)	AC GENERATION AND DISTRIBUTION	REV E–1	10/29/91
DWG 2.4 (Sheet 1 of 3)	MCA DISTRIBUTION	REV E	9/20/90
DWG 2.4 (Sheet 2 of 3)	MCA DISTRIBUTION	REV E–6	2/16/96
DWG 2.4 (Sheet 3 of 3)	MCA DISTRIBUTION	REV E–6	2/16/96
DWG 2.5* (Sheet 1 of 1)	EDO PALLET EPDC/HEATERS	REV E–1	11/8/91
DWG 2.6* (Sheet 1 of 1)	ORBITER DOCKING SYSTEM/POWER	REV E–4	9/21/94
DWG 2.7 (Sheet 1 of 1)	ASSEMBLY POWER CONVERTER UNIT (APCU)	REV E–6	8/13/96
TBL 2–I	VENDOR DRAWING REFERENCES	REV E–5	4/7/95

*Flown in Systems Data Book.

Item	Title	Rev/DCN	Signoff date
	Section 3 Electrical Power Generation		
DWG 3.1* (Sheet 1 of 2)	FUEL CELL/REACTANT STORAGE OVERVIEW	REV E	10/05/90
DWG 3.1* (Shet 2 of 2)	PALLET REACTANT STORAGE OVERVIEW	REV E–6	7/15/96
DWG 3.2* (Sheet 1 of 7)	O2 REACTANT STORAGE TANKS 1 & 2	REV E–1	11/13/91
DWG 3.2* (Shet 2 of 7)	O2 REACTANT STORAGE 4 TANK CONFIG	REV E–1	11/13/91
DWG 3.2* (Sheet 3 of 7)	O2 REACTANT STORAGE 3 TANK CONFIG	REV E–1	11/5/91
DWG 3.2* (Sheet 4 of 7)	O2 REACTANT STORAGE 5 TANK CONFIGURATION OV–102	REV E–1	11/5/91
DWG 3.2* (Sheet 5 of 7)	O2 REACTANT STORAGE 5 TANK CONFIGURATION OV–105	REV E	10/17/90
DWG 3.2* (Sheet 6 of 7)	PALLET O2 REACTANT TANKS 6 & 7	REV E–1	11/8/91
DWG 3.2* (Sheet 7 of 7)	PALLET O2 REACTANT TANKS 8 & 9	REV E–1	11/8/91
DWG 3.3* (Sheet 1 of 7)	H2 REACTANT STORAGE TANKS 1 & 2	REV E–1	11/5/91
DWG 3.3* (Sheet 2 of 7)	H2 REACTANT STORAGE 4 TANK CONFIG	REV E–1	11/15/91
DWG 3.3* (Sheet 3 of 7)	H2 REACTANT STORAGE 3 TANK CONFIGURATION	REV E–1	11/15/91
DWG 3.3* (Sheet 4 of 7)	H2 REACTANT STORAGE 5 TANK CONFIG OV–102 ONLY	REV E–1	11/5/91
DWG 3.3* (Sheet 5 of 7)	H2 REACTANT STORAGE 5 TANK CONFIGURATION OV–105	REV E	10/16/90
DWG 3.3* (Sheet 6 of 7)	PALLET H2 REACTANT TANKS 6 & 7	REV E–1	11/8/91
DWG 3.3* (Sheet 7 of 7)	PALLET H2 REACTANT TANKS 8 & 9	REV E–1	11/8/91
DWG 3.4* (Sheet 1 of 2)	FUEL CELL	REV E–6	5/13/96
DWG 3.4 (Sheet 2 of 2)	FUEL CELL AUTO PURGE AND CELL PERFORMANCE MONITOR	REV E	11/7/91
DWG 3.5* (Sheet 1 of 1)	EDO PALLET	REV E	10/17/90

*Flown in Systems Data Book.

Item	Title	Rev/DCN	Signoff date
	Section 3 Electrical Power Generation (concluded)		
DWG 3.6B (Sheet 1 of 1)	EDO CRYO PALLET PLUMBING	REV E–2	2/6/93
TBL 3–I	VENDOR DRAWING REFERENCES	REV E–2	2/19/93
	Section 4 Lighting		
DWG 4.1 (Sheet 1 of 1)	INTERIOR FLOOD LIGHTING	REV E	10/29/90
DWG 4.2 (Sheet 1 of 2)	INSTRUMENT/NUMERIC/EDGE PANEL LIGHTING	REV E	8/10/87
DWG 4.2 (Sheet 2 of 2)	INSTRUMENT/NUMERIC/EDGE PANEL LIGHTING	REV E–4	9/19/94
DWG 4.3 (Sheet 1 of 1)	ANNUNCIATOR LIGHTING	REV E	9/25/90
DWG 4.4 (Sheet 1 of 1)	EXTERIOR LIGHTING	REV E–6	3/4/96
DWG 4.5 (Sheet 1 of 1)	ORBITER DOCKING SYSTEM/AIRLOCK LIGHTS	REV E–4	8/5/94
TBL 4–I	ANNUNCIATOR CONTROL ASSEMBLY CHANNEL ASSIGNMENTS	REV E	10/18/90
TBL 4–II	VENDOR DRAWING REFERENCES	REV E–4	9/22/94
	Section 5 Sequential/C&W		
DWG 5.1 (Sheet 1 of 1)	SMOKE DETECTION AND FIRE SUPPRESSION	REV E	10/24/90
DWG 5.2 (Sheet 1 of 2)	CAUTION/WARNING OVERVIEW	REV E–3	9/10/93
DWG 5.2 (Sheet 2 of 2)	CAUTION/WARNING	REV E–1	10/21/91
DWG 5.3	(RESERVED)		
DWG 5.4 (Sheet 1 of 1)	SOLID ROCKET BOOSTER RECOVERY	REV E	11/7/90
DWG 5.5 (Sheet 1 of 2)	SRB/ET RANGE SAFETY SYSTEM	REV E	10/15/90
DWG 5.5 (Sheet 2 of 2)	SRB/ET RANGE SAFETY SYSTEM	REV E	10/11/90
TBL 5–I	PRIMARY C/W PARAMETER PROM LIMITS	REV E–3	9/7/93
TBL 5–II	SCHEDULED PRIMARY C/W PARAMETER INHIBIT AND LIMIT CHANGES	REV E–3	9/7/93
TBL 5–III	VENDOR DRAWING REFERENCES	REV E	10/29/90

Item	Title	Rev/DCN	Signoff date
	Section 6 Life Support System		
DWG 6.1* (Sheet 1 of 2)	PRESSURE CONTROL SYSTEM	REV E–1	11/19/91
DWG 6.1* (Sheet 2 of 2)	PRESSURE CONTROL SYSTEM	REV E–1	11/19/91
DWG 6.2* (Sheet 1 of 1)	ATMOSPHERE CIRCULATION	REV E	10/16/90
DWG 6.3 (Sheet 1 of 2)	AIRLOCK/ECLSS INTERFACES	REV E–3	10/6/93
DWG 6.3 (Sheet 2 of 2)	AIRLOCK/ECLSS INTERFACES	REV E–4	6/2/94
DWG 6.4* (Sheet 1 of 1)	SUPPLY WATER STORAGE	REV E–4	8/4/94
DWG 6.5* (Sheet 1 of 1)	WASTE MANAGEMENT SYSTEM	REV E–3	9/10/93
DWG 6.6 (Sheet 1 of 1)	REPACKAGED GALLEY	REV E–4	7/20/94
DWG 6.7	(RESERVED)		
DWG 6.8 (Sheet 1 of 1)	ECLSS INSTRUMENTATION	REV E	8/30/90
DWG 6.9* (Sheet 1 of 1)	EMU INTEGRATED SYSTEM SCHEMATIC	REV E–6	6/18/96
DWG 6.10 (Sheet 1 of 1)	EMU ELECTRICAL SCHEMATIC	REV E–2	12/30/92
DWG 6.11 (Sheet 1 of 1)	MMU & FSS PROPULSION SCHEMATIC	REV E	9/27/90
DWG 6.12* (Sheet 1 of 2)	EDO – CO2 REMOVAL SYSTEM	REV E–6	3/5/96
DWG 6.12* (Sheet 2 of 2)	RCRS MECHANICAL/FAULT LOGIC	REV E–1	11/15/91
DWG. 6.13* (Sheet 1 of 3)	EDO WASTE MANAGEMENT	REV E–3	9/7/93
DWG 6.13* (Sheet 2 of 3)	EDO WASTE MANAGEMENT	REV E–3	10/5/93
DWG 6.13* (Sheet 3 of 3)	EDO WASTE MANAGEMENT	REV E–3	10/6/93
DWG. 6.14* (Sheet 1 of 1)	EXTERNAL AIRLOCK ECLSS	REV E–6	5/29/96
TBL 6–I	VENDOR DRAWING REFERENCES	REV E–4	9/26/94

*Flown in Systems Data Book.

Item	Title	Rev/DCN	Signoff date
	Section 7 Thermal		
DWG 7.1* (Sheet 1 of 2)	ACTIVE THERMAL CONTROL SYSTEM – FREON COOLANT LOOP 1, 2	REV E–1	10/7/91
DWG 7.1* (Sheet 2 of 2)	ACTIVE THERMAL CONTROL SYSTEM – FREON COOLANT LOOP 1, 2 (PLUMBING LENGTHS)	REV E–1	10/7/91
DWG 7.2* (Sheet 1 of 1)	AMMONIA BOILER SYSTEM	REV E–1	10/7/91
DWG 7.3* (Sheet 1 of 2)	FLASH EVAPORATOR SUBSYSTEM	REV E–2	10/29/91
DWG 7.3* (Sheet 2 of 2)	FLASH EVAPORATOR SUBSYSTEM	REV E–2	1/4/93
DWG 7.4* (Sheet 1 of 1)	ARS H_2O COOLANT LOOPS	REV E–2	7/15/92
DWG 7.5 (Sheet 1 of 1)	THERMAL AFT FUSELAGE	REV E	8/21/90
DWG 7.6 (Sheet 1 of 1)	TCS – INSTRUMENTATION MID FUSELAGE	REV E	8/27/90
DWG 7.7 (Sheet 1 of 1)	TPS/STRUCTURE INSTRUMENTATION	REV E–5	1/17/95
DWG 7.8* (Sheet 1 of 4)	EXTERNAL SIDE VIEWS	REV E	8/31/90
DWG 7.8* (Sheet 2 of 4)	EXTERNAL VIEWS TOP/BOTTOM	REV E	8/23/90
DWG 7.8* (Sheet 3 of 4)	EXTERNAL PENETRATIONS/TILE (AFT)	REV E	9/21/90
DWG 7.8 (Sheet 4 of 4)	EXTERNAL POST TEMPERATURES	REV E	8/23/90
TBL 7–I	VENDOR DRAWING REFERENCES	REV E–5	4/7/95
	Section 8 Data Processing		
DWG 8.1 (Sheet 1 of 1)	COMPUTER INPUT/OUTPUT FUNCTION	REV E	8/23/96
DWG 8.2 (Sheet 1 of 1)	BACKUP FLIGHT CONTROLLER	REV E	9/4/90
DWG 8.3	(RESERVED)		
DWG 8.4	(RESERVED)		
DWG 8.5 (Sheet 1 of 1)	MASS MEMORY	REV E	8/28/90

*Flown in Systems Data Book.

Item	Title	Rev/DCN	Signoff date
	Section 8 Data Processing (concluded)		
DWG 8.6 (Sheet 1 of 1)	MULTIFUNCTION CRT DISPLAY SYSTEM	REV E–6	6/4/96
DWG 8.7* (Sheet 1 of 3)	DPS ELECTRICAL POWER LOSS	REV E–2	10/9/92
DWG 8.7 (Sheet 2 of 3)	DPS ELECTRICAL POWER LOSS	REV E–2	10/9/92
DWG 8.7 (Sheet 3 of 3)	DPS ELECTRICAL POWER LOSS	REV E	8/28/90
DWG 8.8 (Sheet 1 of 3)	MULTIPLEXER/DEMULTIPLEXER	REV E–6	5/15/96
DWG 8.8 (Sheet 2 of 3)	MULTIPLEXER/DEMULTIPLEXER	REV E	8/24/90
DWG 8.8 (Sheet 3 of 3)	MULTIPLEXER/DEMULTIPLEXER	REV E–5	1/17/95
DWG 8.9 (Sheet 1 of 1)	MASTER TIMING UNIT	REV E–6	1/31/96
DWG 8.10 (Sheet 1 of 1)	TIMERS	REV E–6	9/8/95
DWG 8.11 (Sheet 1 of 2)	PANEL O6 GPC SWITCHES	REV E–2	10/9/92
DWG 8.11 (Sheet 2 of 2)	PANEL O6 GPC SWITCHES	REV E–2	10/9/92
DWG 8.12 (Sheet 1 of 2)	GENERAL PURPOSE COMPUTER (I/O FUNCTIONS)	REV E–6	5/16/96
DWG 8.12 (Sheet 2 of 2)	GENERAL PURPOSE COMPUTER (AP101–S)	REV E–1	8/27/91
DWG 8.13 (Sheet 1 of 4)	ENHANCED MULTIPLEXER/DEMULTIPLEXER	REV E–6	5/15/95
DWG 8.13 (Sheet 2 of 4)	ENHANCED MULTIPLEXER/DEMULTIPLEXER	REV E–2	3/17/92
DWG 8.13 (Sheet 3 of 4)	ENHANCED MULTIPLEXER/DEMULTIPLEXER	REV E–2	2/9/93
DWG 8.13 (Sheet 4 of 4)	ENHANCED MULTIPLEXER/DEMULTIPLEXER	REV E–5	1/17/95
TBL 8–I	VENDOR DRAWING REFERENCES	REV E–4	9/27/94

*Flown in Systems Data Book.

Item	Title	Rev/DCN	Signoff date
	Section 9 GN&C		
DWG 9.1 (Sheet 1 of 2)	G&C DEDICATED DISPLAYS	REV E–6	7/3/96
DWG 9.1 (Sheet 2 of 2)	G&C DEDICATED DISPLAYS	REV E–6	7/3/96
DWG 9.2 (Sheet 1 of 2)	TACAN (GOULD)	REV E–6	6/3/96
DWG 9.2 (Sheet 2 of 2)	TACAN (COLLINS)	REV E–6	6/3/96
DWG 9.3 (Sheet 1 of 1)	RADAR ALTIMETER	REV E–5	2/1/95
DWG 9.4 (Sheet 1 of 1)	MICROWAVE SCANNING BEAM	REV E	9/4/90
DWG 9.5 (Sheet 1 of 1)	COAS	REV E	9/7/90
DWG 9.6 (Sheet 1 of 3)	STAR TRACKER	REV E–6	7/3/96
DWG 9.6 (Sheet 2 of 3)	IMAGE DISSECTOR TUBE (IDT) STAR TRACKER	REV E–3	10/5/93
DWG 9.6 (Sheet 3 of 3)	SOLID STATE STAR TRACKER (SSST)	REV E–5	2/13/95
DWG 9.7 (Sheet 1 of 1)	INERTIAL MEASUREMENT UNIT – HAINS	REV E–4	8/29/94
DWG 9.8 (Sheet 1 of 1)	RATE GYROS/BODY MOUNTED ACCELEROMETERS	REV E–6	7/26/96
DWG 9.9 (Sheet 1 of 1)	AIR DATA SYSTEM	REV E–4	8/8/94
DWG 9.10 (Sheet 1 of 1)	FCS MODE SWITCHES	REV E–1	10/21/91
DWG 9.11 (Sheet 1 of 1)	AERO SURFACE SIGNAL FLOW	REV E	8/27/90
DWG 9.12 (Sheet 1 of 1)	TRAJECTORY CONTROL SENSOR	REV E–5	1/30/95
DWG 9.13 (Sheet 1 of 1)	OMS/TVC SIGNAL FLOW AND DRIVERS	REV E–6	7/26/96
DWG 9.14 (Sheet 1 of 1)	ME AND SRB TVC ACTUATORS	REV E–6	7/3/96
DWG 9.15 (Sheet 1 of 1)	ME & SRB TVC SIGNAL FLOW	REV E–5	3/31/95
DWG 9.16 (Sheet 1 of 2)	AERO SURFACE ACTUATORS	REV E–4	8/8/94

Item	Title	Rev/DCN	Signoff date
	Section 9 GN&C (concluded)		
DWG 9.16 (Sheet 2 of 2)	AERO SURFACE ACTUATORS	REV E–4	8/8/94
DWG 9.17	RHC/SBTC/RPTA/THC	REV E	9/4/90
DWG 9.18 (Sheet 1 of 1)	GLOBAL POSITIONING SYSTEM (GPS) OI–25 AND OI–26A	REV E–6	7/30/96
DWG 9.19	(RESERVED)		
DWG 9.20 (Sheet 1 of 1)	HEADS UP DISPLAY	REV E–1	11/5/91
TBL 9–I	VENDOR DRAWING REFERENCES	REV E–5	4/7/95
	Volume II – Sections 10 through 15		
	Section 10 Main Propulsion		
DWG 10.1 (Sheet 1 of 4)	MEC COMMAND TABLE TABLE 10.I	REV E	9/7/90
DWG 10.1 (Sheet 2 of 4)	MASTER EVENTS CONTROLLER OVERVIEW	REV E	9/7/90
DWG 10.1 (Sheet 3 of 4)	MASTER EVENTS CONTROLLER	REV E–1	11/13/91
DWG 10.1 (Sheet 4 of 4)	MASTER EVENTS CONTROLLER	REV E	9/7/90
DWG 10.2 (Sheet 1 of 2)	SOLID ROCKET BOOSTER 1	REV E–4	9/27/94
DWG 10.2 (Sheet 2 of 2)	SOLID ROCKET BOOSTER 2	REV E	9/11/90
DWG 10.3 (Sheet 1 of 1)	ORBITER/ENGINE INTERFACE UNIT	REV E–6	1/31/96
DWG 10.4 (Sheet 1 of 1)	MAIN ENGINE BLOCK I CONTROLLER	REV E	9/7/90
DWG 10.5 (Sheet 1 of 1)	MAIN ENGINE BLOCK I CONTROLLER INTERFACE ELECTRONICS	REV E	9/11/90
DWG 10.6 (Sheet 1 of 1)	MAIN ENGINE BLOCK I INPUT ELECTRONICS	REV E	9/7/90
DWG 10.7 (Sheet 1 of 1)	MAIN ENGINE BLOCK I OUTPUT ELECTRONICS	REV E	9/11/90
DWG 10.8* (Sheet 1 of 1)	MPS HELIUM SUPPLY	REV E	9/7/90
DWG 10.9 (Sheet 1 of 1)	MECHANICAL HYDRAULICS AND PNEUMATICS	REV E–6	1/31/96

Item	Title	Rev/DCN	Signoff date
	Section 10 Main Propulsion (concluded)		
DWG 10.10 (Sheet 1 of 1)	EXTERNAL TANK	REV E–5	2/24/95
DWG 10.11 (Sheet 1 of 1)	MAIN ENGINE LO_2 SYSTEM	REV E–5	2/24/95
DWG 10.12 (Sheet 1 of 1)	MAIN ENGINE LH_2 SYSTEM	REV E–6	6/4/96
DWG 10.13 (Sheet 1 of 1)	MAIN ENGINE	REV E–6	1/31/96
DWG 10.14 (Sheet 1 of 1)	MAIN ENGINE BLOCK I FLIGHT ACCELEROMETER SAFETY CUTOFF SYSTEM	REV E–1	11/13/91
DDWG 10.15 (Sheet 1 of 1)	LO_2 AND LH_2 17–INCH DISCONNECT LATCH	REV E–6	1/30/96
DWG 10.16 (Sheet 1 of 1)	MAIN ENGINE BLOCK II CONTROLLER OVERVIEW	REV E–6	1/31/96
DWG 10.17 (Sheet 1 of 1)	MAIN ENGINE BLOCK II DIGITAL CONTROLLER UNIT	REV E–2	1/28/93
DWG 10.18 (Sheet 1 of 1)	MAIN ENGINE BLOCK II CONTROLLER INTERFACE ELECTRONICS	REV E–2	1/28/93
DWG 10.19 (Sheet 1 of 1)	MAIN ENGINE BLOCK II INPUT ELECTRONICS/FLIGHT ACCELEROMETER SAFETY CUTOFF SYSTEM	REV E–6	1/31/96
DWG 10.20 (Sheet 1 of 1)	MAIN ENGINE BLOCK II CONTROLLER OUTPUT ELECTRONICS	REV E–2	1/28/93
DWG 10.21 (Sheet 1 of 1)	MAIN ENGINE BLOCK II CONTROLLER POWER SUPPLY ELECTRONICS	REV E–2	2/4/93
DWG 10.22	(RESERVED)		
DWG 10.23 (Sheet 1 of 4)	ENHANCED MASTER EVENTS CONTROLLER OVERVIEW	REV E–4	9/27/94
DWG 10.23 (Sheet 2 of 4)	EMEC 1 AND 2 POWER ON	REV E–4	9/27/94
DWG 10.23 (Sheet 3 of 4)	ENHANCED MASTER EVENTS CONTROLLER	REV E–4	9/27/94
DWG 10.23 (Sheet 4 of 4)	EMEC COMMAND TABLE	REV E–4	9/27/94
TBL 10–I	(RESERVED)		
TBL 10–II	VENDOR DRAWING REFERENCES	REV E–6	8/14/96

Item	Title	Rev/DCN	Signoff date
	Section 11 OMS/RCS Propulsion		
DWG 11.1* (Sheet 1 of 2)	OMS/RCS INTERCONNECT LEFT POD	REV E–2	12/17/92
DWG 11.1* (Sheet 2 of 2)	OMS/RCS INTERCONNECT RIGHT POD	REV E–2	12/17/92
DWG 11.2 (Sheet 1 of 1)	OMS GAGING	REV E–1	10/1/91
DWG 11.3* (Sheet 1 of 2)	OMS/DRIVERS	REV E	9/4/90
DWG 11.3* (Sheet 2 of 2)	ORBITAL MANEUVERING SYSTEM	REV E	9/4/90
DWG 11.4* (Sheet 1 of 1)	AFT RCS/OMS INTERCONNECT	REV E	9/10/90
DWG 11.5* (Sheet 1 of 2)	AFT RCS MODULE	REV E–3	8/31/93
DWG 11.5* (Sheet 2 of 2)	AFT RCS MODULE	REV E–3	8/31/93
DWG 11.6 (Sheet 1 of 2)	FWD RCS MODULE	REV E–3	8/23/93
DWG 11.6* (Sheet 2 of 2)	FWD RCS MODULE	REV E–1	10/1/91
DWG 11.7 (Sheet 1 of 1)	HEATER CONTROL SYS FWD RCS	REV E	9/10/90
DWG 11.8 (Sheet 1 of 2)	HEATER CONTROL SYS OMS POD	REV E–2	1/11/93
DWG 11.8 (Sheet 2 of 2)	HEATER CONTROL SYSTEM POD HEATERS	REV E–2	1/11/93
DWG 11.9 (Sheet 1 of 1)	HEATER CONTROL SYS AFT OMS/RCS CROSSFEED	REV E–2	1/11/93
DWG 11.10 (Sheet 1 of 3)	RCS SIGNAL FLOW AND DRIVERS	REV E	9/4/90
DWG 11.10 (Sheet 2 of 3)	RCS SIGNAL FLOW AND DRIVERS	REV E	9/4/90
DWG 11.10 (Sheet 3 of 3)	RCS SIGNAL FLOW AND DRIVERS	REV E	9/11/90
DWG 11.11 (Sheet 1 of 2)	ORBITAL REFUELING SYSTEM	REV E	9/4/90
DWG 11.11 (Sheet 2 of 2)	ORBITAL REFUELING SYSTEM	REV E	9/4/90
TBL 11–I	VENDOR OR DRAWING REFERENCES	REV E–2	2/19/93

*Flown in Systems Data Book.

Item	Title	Rev/DCN	Signoff date
	Section 12 APU/Hydraulics Systems		
DWG 12.1* (Sheet 1 of 2)	AUXILIARY POWER UNIT (APU)	REV E–4	9/27/94
DWG 12.1* (Sheet 2 of 2)	AUXILIARY POWER UNIT (APU)	REV E–4	9/27/94
DWG 12.2 (Sheet 1 of 3)	HYDRAULIC/APU LINE SCHEMATIC	REV E–1	11/21/91
DWG 12.2 (Sheet 2 of 3)	HYDRAULIC LINE SCHEMATIC	REV E–1	11/21/91
DWG 12.2 (Sheet 3 of 3)	HYDRAULIC/IAPU LINE SCHEMATIC	REV E–3	9/28/93
DWG 12.3* (Sheet 1 of 3)	HYDRAULIC POWER SYSTEM	REV E–5	4/5/95
DWG 12.3* (Sheet 2 of 3)	HYDRAULIC POWER SYSTEM	REV E–2	2/2/93
DWG 12.3* (Sheet 3 of 3)	HYDRAULIC POWER SYSTEM	REV E–6	7/24/96
DWG 12.4* (Sheet 1 of 1)	APU/HYD WATER SPRAY BOILER	REV E–6	5/8/96
TBL 12–I	VENDOR DRAWING REFERENCES	REV E–2	2/19/93
	Section 13 Landing Gear		
DWG 13.1 (Sheet 1 of 2)	LANDING GEAR	REV E–2	11/4/92
DWG 13.1 (Sheet 2 of 2)	LANDING GEAR	REV E–2	1/29/93
DWG 13.2 (Sheet 1 of 1)	BRAKES/REDUNDANT WOW	REV E–5	2/23/95
DWG 13.3 (Sheet 1 of 1)	NOSE WHEEL STEERING	REV E–2	11/6/92
DWG 13.4 (Sheet 1 of 2)	DRAG CHUTE MECHANICAL	REV E–2	5/28/92
DWG 13.4 (Sheet 2 of 2)	DRAG CHUTE ELECTRICAL	REV E–2	5/28/92
TBL 13–I	VENDOR DRAWING REFERENCES	REV E–2	2/19/93

*Flown in Systems Data Book.

Item	Title	Rev/DCN	Signoff date
	Section 14 Payload Bay		
DWG 14.1* (Sheet 1 of 3)	PAYLOAD BAY DOORS/RADIATOR OVERVIEW	REV E	10/23/90
DWG 14.1* (Sheet 2 of 3)	PAYLOAD BAY DOOR LATCHES AND EVA SLIDEWIRE	REV E–6	8/22/96
DWG 14.1* (Sheet 3 of 3)	RADIATORS DEPLOY/STOW	REV E–6	5/20/96
DWG 14.2* (Sheet 1 of 2)	PLBD OPEN/CLOSE H/W OVERVIEW	REV E–4	7/7/94
DWG 14.2* (Sheet 2 of 2)	PLBD SOFTWARE OVERVIEW (PASS)	REV E–4	7/7/94
DWG 14.3 (Sheet 1 of 3)	PAYLOAD RETENTION LATCH ELECTRICAL	REV E–4	7/7/94
DWG 14.3 (Sheet 2 of 3)	PAYLOAD RETENTION LATCH–MECH	REV E	10/2/90
DWG 14.3 (Sheet 3 of 3)	PROTECTIVE COVER REMOVAL SYSTEM	REV E	10/12/90
DWG 14.4 (Sheet 1 of 8)	RMS D&C PANEL	REV E–2	12/18/92
DWG 14.4 (Sheet 2 of 8)	DIGITAL SPA	REV E–6	7/18/96
DWG 14.4 (Sheet 3 of 8)	RMS CONTROL SYSTEM (SPA AND MOTOR CONTROL)	REV E–1	10/22/91
DWG 14.4 (Sheet 4 of 8)	RMS CONTROL SYSTEM (BDA)	REV E	8/24/90
DWG 14.4 (Sheet 5 of 8)	RMS CONTROL SYSTEM (EEEU AND MOTOR CONTROL)	REV E–1	11/6/91
DWG 14.4 (Sheet 6 of 8)	RMS THERMOSTAT/HEATER ELEMENTS	REV E	8/31/90
DWG 14.4* (Sheet 7 of 8)	RMS MECHANICAL SYSTEM OVERVIEW	REV E	10/4/90
DWG 14.4* (Sheet 8 of 8)	RMS ELECTRICAL SYSTEM OVERVIEW	REV E	9/19/90
DWG 14.5 (Sheet 1 of 2)	RMS/SOFTWARE OVERVIEW	REV E–6	8/4/95
DWG 14.5 (Sheet 2 of 2)	RMS/SOFTWARE OVERVIEW	REV E–6	8/4/95
DWG 14.6 (Sheet 1 of 3)	PORT MANIPULATOR POSITIONING MECHANISM–MANIPULATOR RETENTION LATCHES ELECTRICAL	REV E	8/31/90

*Flown in Systems Data Book.

Item	Title	Rev/DCN	Signoff date
	Section 14 Payload Bay (continued)		
DWG 14.6 (Sheet 2 of 3)	PORT MANIPULATOR POSITIONING MECHANISM–MANIPULATOR RETENTION LATCHES MECHANICAL	REV E	8/31/90
DWG 14.6 (Sheet 3 of 3)	PORT RMS JETTISON ELECTRICAL	REV E	9/19/90
DWG 14.7 (Sheet 1 of 3)	FLIGHT RELEASABLE GRAPPLE FIXTURE	REV E–1	11/21/91
DWG 14.7 (Sheet 2 of 3)	RIGIDIZE SENSING GRAPPLE FIXTURE	REV E–1	11/21/91
DWG 14.7 (Sheet 3 of 3)	ELECTRICAL FLIGHT GRAPPLE FIXTURE	REV E–1	11/12/91
DWG 14.8 (Sheet 1 of 3)	MCIU FIRMWARE OVERVIEW	REV E	9/7/90
DWG 14.8 (Sheet 2 of 3)	MCIU FIRMWARE SYNCIR ROUTINE	REV E	9/7/90
DWG 14.8 (Sheet 3 of 3)	MCIU FIRMWARE MEMORY MAP	REV E	9/7/90
DWG 14.9 (Sheet 1 of 5)	SPDS Y_0 ELECTRICAL	REV E	8/31/90
DWG 14.9 (Sheet 2 of 5)	SPDS RDU ELECTRICAL	REV E	8/31/90
DWG 14.9 (Sheet 3 of 5)	SPDS PAYLOAD RELEASE SYSTEM AND PEDESTAL DRIVE TRANSFER SYSTEM	REV E	9/10/90
DWG 14.9 (Sheet 4 of 5)	STABILIZED PAYLOAD DEPLOYMENT SYSTEM MECHANICAL OVERVIEW	REV E	9/10/90
DWG 14.9 (Sheet 5 of 5)	STABILIZED PAYLOAD DEPLOYMENT SYSTEM MECHANICAL OVERVIEW	REV E	9/10/90
DWG 14.10 (Sheet 1 of 1)	NEW RMS MCIU (–5 MCIU)	REV E–1	8/27/91
DWG 14.11 (Sheet 1 of 4)	NEW MCIU FIRMWARE OVERVIEW	REV E–1	8/27/91
DWG 14.11 (Sheet 2 of 4)	NEW MCIU DETAILED FIRMWARE	REV E–1	8/27/91
DWG 14.11 (Sheet 3 of 4)	NEW MCIU DETAILED FIRMWARE	REV E–1	8/27/91
DWG 14.11 (Sheet 4 of 4)	NEW MCIU FIRMWARE MEMORY MAP	REV E–1	8/27/91
DWG 14.12 (Sheet 1 of 3)	ROEU ELECTRICAL	REV E–1	11/14/91
DWG 14.12 (Sheet 2 of 3)	REMOTELY OPERATED ELECTRICAL UMBILICAL MECHANICAL OVERVIEW	REV E–1	11/14/91

Item	Title	Rev/DCN	Signoff date
	Section 16 Communications Systems (continued)		
DWG 16.1 (Sheet 6 of 6)	PAYLOAD SYSTEM OVERVIEW	REV E–6	4/11/96
DWG 16.2 (Sheet 1 of 3)	S–BAND PM TRANSPONDER	REV E–4	8/2/94
DWG 16.2 (Sheet 2 of 3)	S–BAND PM AMPLIFIER SYSTEM	REV E–6	2/14/96
DWG 16.2 (Sheet 3 of 3)	S–BAND PM/FM SWITCH BEAM ANTENNA SYSTEM	REV E–4	8/2/94
DWG 16.3 (Sheet 1 of 3)	NETWORK SIGNAL PROCESSOR RETURN LINK	REV E–6	7/22/96
DWG 16.3 (Sheet 2 of 3)	NETWORK SIGNAL PROCESSOR FORWARD LINK	REV E	11/2/90
DWG 16.3 (Sheet 3 of 3)	COMSEC 1/2	REV E–6	7/26/96
DWG 16.4 (Sheet 1 of 2)	TEXT AND GRAPHICS SYSTEM	REV E–2	11/4/92
DWG 16.4 (Sheet 2 of 2)	SECURE TEXT & GRAPHICS SYSTEM TELEVISION INTERFACES	REV E–2	12/18/92
DWG 16.5 (Sheet 1 of 2)	KU BAND SYSTEM	REV E–3	9/27/93
DWG 16.5 (Sheet 2 of 2)	KU BAND SYSTEM	REV E–6	7/16/96
DWG 16.6 (Sheet 1 of 1)	PAYLOAD DATA INTERFACE PANEL (PDIP)	REV E–6	3/18/96
DWG 16.7 (Sheet 1 of 1)	VHF RADIO AND AUDIO RADIO INTERFACE UNIT (ARIU)	REV E–6	5/31/96
DWG 16.8 (Sheet 1 of 1)	S–BAND FM SYSTEM	REV E	10/10/90
DWG 16.9 (Sheet 1 of 2)	UHF ORBITER TRANSCEIVER	REV E–6	7/19/96
DWG 16.9 (Sheet 2 of 2)	OPERATIONAL UHF EVC BACKPACK TRANSCEIVER	REV E–6	7/19/96
DWG 16.10 (Sheet 1 of 7)	AUDIO PANEL/ATU PLT, CDR	REV E–6	7/16/96
DWG 16.10 (Sheet 2 of 7)	AUDIO PANEL/ATU MS, PS, AND OS SU	REV E–6	7/15/96
DWG16.10C,D,E (Sheet 3 of 7)	AUDIO PANEL/ATU MID DECK SU AND CCU	REV E–6	7/16/96
DWG 16.10 (Sheet 4 of 7)	AUDIO PANEL/ATU AIRLOCK	REV E–6	5/29/96

Item	Title	Rev/DCN	Signoff date
	Section 16 Communications Systems (continued)		
DWG 16.10B (Sheet 5 of 7)	AUDIO PANEL/ATU AIRLOCK 1 BACKUP	REV E–6	4/5/96
DWG16.10B (Sheet 6 of 7)	AUDIO PANEL/ATU MID DECK AUDIO/AIRLOCK 2 BACKUP	REV E–6	7/16/96
DWG 16.10B (Sheet 7 of 7)	AUDIO PANEL/ATU OS AND OS SU	REV E–6	7/16/96
DWG 16.11 (Sheet 1 of 2)	AUDIO/ACCU	REV E–6	7/22/96
DWG 16.11 (Sheet 2 of 2)	AUDIO/ACCU	REV E	10/26/90
DWG 16.12 (Sheet 1 of 1)	TV CONTROL	REV E–6	7/16/96
DWG 16.13 (Sheet 1 of 5)	TV/CAMERA POWER	REV E–6	5/29/96
DWG 16.13 (Sheet 2 of 5)	TV/CAMERA – SIT MONITOR	REV E–6	3/15/96
DWG 16.13 (Sheet 3 of 5)	TV/EMU	REV E–1	10/2/90
DWG 16.13 (Sheet 4 of 5)	AIRBORNE DIGITIZER UNIT SECURE TELEVISION SYSTEM	REV E–1	10/23/90
DWG 16.13 (Sheet 5 of 5)	COLOR TV MONITOR (CTVM)	REV E–1	11/20/91
DWG 16.14 (Sheet 1 of 2)	S–BAND PAYLOAD INTERROGATOR	REV E	10/26/90
DWG 16.14 (Sheet 2 of 2)	S–BAND PAYLOAD INTERROGATOR	REV E–6	7/19/96
DWG 16.15 (Sheet 1 of 1)	PAYLOAD SIGNAL PROCESSOR	REV E–6	7/19/96
DWG 16.16 (Sheet 1 of 1)	SRB DFI FLIGHT RECORDER	REV E	9/12/90
DWG 16.17 (Sheet 1 of 1)	GROUND COMMAND INTERFACE LOGIC (GCIL) CONTROLLER	REV E–6	3/11/96
DWG 16.18 (Sheet 1 of 1)	OPS RECORDERS	REV E–6	4/1/96
DWG 16.19 (Sheet 1 of 1)	P/L RECORDER	REV E–6	4/1/96
DWG 16.20 (Sheet 1 of 2)	WIRELESS CREW COMM SYS AUDIO INTERFACE UNIT	REV E–6	3/11/96
DWG 16.20 (Sheet 2 of 2)	WIRELESS CREW COMM SYS CREW REMOTE UNIT	REV E–6	5/6/96

Item	Title	Rev/DCN	Signoff date
	Section 16 Communications Systems (concluded)		
DWG 16.21	(RESERVED)		
DWG 16.22	(RESERVED)		
DWG 16.23 (Sheet 1 of 1)	EXTENDED RANGE PAYLOAD COMM LINK	REV E–3	9/27/93
DWG 16.24 (Sheet 1 of 1)	8MM VIDEO TAPE RECORDER	REV E–6	5/29/96
DWG 16.25 (Sheet 1 of 1)	COMM SYSTEM POWER DISTRIBUTION	REV E–6	5/1/96
DWG 16.26 (Sheet 1 of 1)	COMM MDM I/F	REV E–6	3/11/96
TBL 16–I	VENDOR DRAWING REFERENCES	REV E–3	10/15/93
	Section 17 Instrumentation		
DWG 17.1 (Sheet 1 of 3)	OPERATIONAL INSTRUMENTATION DSC'S AND MDM'S	REV E–1	11/4/91
DWG 17.1 (Sheet 2 of 3)	OI DEDICATED SIGNAL CONDITIONERS	REV E–2	11/4/92
DWG 17.1 (Sheet 3 of 3)	OI INST MDM	REV E	10/23/90
DWG 17.2 (Sheet 1 of 1)	OI PCM MASTER UNIT	REV E–6	7/16/96
DWG 17.3 (Sheet 1 of 1)	PAYLOAD DATA INTERLEAVER	REV E–6	7/26/96
DWG 17.4	(RESERVED)		
DWG 17.5	(RESERVED)		
DWG 17.6	(RESERVED)		
DWG 17.7	(RESERVED)		
DWG 17.8 (Sheet 1 of 1)	THERMAL IMPULSE PRINTER SYSTEM (TIPS)	REV E–6	3/11/96
DWG 17.9	(RESERVED)		
DWG 17.10 (Sheet 1 of 1)	BIO MEDICAL INSTRUMENTATION	REV E	10/10/90
DWG 17.11 (Sheet 1 of 1)	MADS EQUIP	REV E–6	7/25/96
DWG 17.12C,D (Sheet 1 of 1)	MODULE AUXILIARY DATA SYSTEM RECORDER/ CONTROLLER SUBSYSTEM	REV E–6	7/29/96

Item	Title	Rev/DCN	Signoff date
	Section 17 Instrumentation (concluded)		
DWG 17.13 (Sheet 1 of 1)	ORBITER EXPERIMENTS SUPPORT SYSTEM FOR OEX	REV E–6	4/11/96
TBL 17–I	VENDOR DRAWING REFERENCES	REV E	11/2/90
	Section 18 Escape System		
DWG 18.1* (Sheet 1 of 1)	ESCAPE PANEL	REV E–4	7/15/94
DWG 18.2* (Sheet 1 of 1)	POLE CREW ESCAPE SYSTEM	REV E–4	7/7/94
DWG 18.3* (Sheet 1 of 1)	EMERGENCY EGRESS SLIDE/SKYGENIE	REV E–4	7/7/94
DWG 18.4 (Sheet 1 of 1)	LAUNCH/ENTRY SUIT AND QUICK–DON MASK	REV E–6	5/10/96
DWG 18.5 (Sheet 1 of 3)	SURVIVAL GEAR RAFT/HARNESS/PARACHUTE	REV E–6	5/10/96
DWG 18.5 (Sheet 2 of 3)	SURVIVAL GEAR	REV E–6	5/20/96
DWG 18.5 (Sheet 3 of 3)	LES/ACES COMPONENTS AND SEAT INTERFACE	REV E–6	5/20/96
DWG 18.6 (Sheet 1 of 1)	PERSONAL PARACHUTE ASSEMBLY (PPA)	REV E–4	8/4/94
DWG 18.7 (Sheet 1 of 1)	SIDE HATCH JETTISON	REV E–1	11/18/91
DWG 18.8 (Sheet 1 of 1)	ADVANCED CREW ESCAPE SUIT & THERMAL ELECTRIC LIQUID COOLING UNIT & QUICK DON MASK	REV E–6	5/20/96
TBL 18–I	VENDOR DRAWING REFERENCES	REV E	11/25/91
	Section 19 Structures		
DWG 19.1 (Sheet 1 of 6)	PAYLOAD BAY OVERVIEW 1307 BULKHEAD LOOKING AFT	REV E	9/7/90
DWG 19.1 (Sheet 2 of 6)	PAYLOAD BAY OVERVIEW 582/576 BULKHEAD LOOKING AFT	REV E	9/7/90
DWG 19.1* (Sheet 3 of 6)	STRUCTURES AND SYSTEMS LOCATION	REV E	9/26/90
DWG 19.1* (Sheet 4 of 6)	STRUCTURES AND SYSTEMS LOCATIONS	REV E	10/17/90
DWG 19.1* (Sheet 5 of 6)	STRUCTURES AND SYSTEMS LOCATIONS	REV E	10/3/90

*Flown in Systems Data Book.

Item	Title	Rev/DCN	Signoff date
	Section 19 Structure (concluded)		
DWG 19.1* (Sheet 6 of 6)	STRUCTURES AND SYSTEMS LOCATIONS	REV E	9/7/90
DWG 19.2 (Sheet 1 of 1)	SRB/ET CONFIGURATION	REV E	8/24/90
DWG 19.3 (Sheet 1 of 3)	PAYLOAD BAY OVERVIEW (LOOKING INBOARD AND DOWN)	REV E	9/6/90
DWG 19.3 (Sheet 2 of 3)	PAYLOAD BAY OVERVIEW PORT SIDE	REV E	9/6/90
DWG 19.3 (Sheet 3 of 3)	PAYLOAD BAY OVERVIEW STARBOARD SIDE	REV E	9/6/90
DWG 19.4* (Sheet 1 of 3)	EXTERNAL SIDE VIEWS	REV E	9/6/90
DWG 19.4* (Sheet 2 of 3)	EXTERNAL VIEWS TOP/BOTTOM	REV E	9/6/90
DWG 19.4* (Sheet 3 of 3)	EXTERNAL PENETRATIONS/TILE (AFT)	REV E	9/6/90
	Section 20 Displays and Controls		
DWG 20.1 (Sheet 1 of 4)	DISPLAYS AND CONTROLS FORWARD STATIONS	REV E–3	9/9/93
DWG 20.1 (Sheet 2 of 4)	DISPLAYS AND CONTROLS FORWARD STATIONS	REV E–2	1/28/93
DWG 20.1 (Sheet 3 of 4)	DISPLAYS AND CONTROLS FORWARD STATIONS	REV E–1	11/14/91
DWG 20.1 (Sheet 4 of 4)	DISPLAYS AND CONTROLS FORWARD STATIONS	REV E	10/9/90
DWG 20.2 (Sheet 1 of 3)	DISPLAYS AND CONTROLS AFT STATIONS	REV E–2	2/1/93
DWG 20.2 (Sheet 2 of 3)	DISPLAYS AND CONTROLS AFT STATIONS AND MISSION UNIQUE PANELS	REV E–1	11/8/91
DWG 20.2 (Sheet 3 of 3)	DISPLAYS AND CONTROLS AFT STATIONS	REV E–1	11/14/91
DWG 20.3 (Sheet 1 of 1)	DISPLAYS AND CONTROLS MID DECK STATIONS	REV E–2	2/1/93
DWG 20.4 (Sheet 1 of 1)	DISPLAYS AND CONTROLS AIRLOCK	REV E–4	8/1/94
TBL 20–I	VENDOR DRAWING REFERENCES	REV E	11/5/90

*Flown in Systems Data Book.

J I H G F E D C B A

ESS BUSES — PRFLT BUSES — PAYLOAD BUSES

DATE: 02/12/96	NAME: LAM	VERSION: BPT: 17
DATE: 03/08/96	NAME: JMB	VERSION: BPT: 18
DATE: 03/21/96	NAME: MDU	VERSION: INK: 6

FC1 — MNA MPC1 — MNB MPC2 — FC2 — MNC MPC3 — FC3

$V_{CNTLAB1}$ $V_{CNTLAB2}$ $V_{CNTLAB3}$ $V_{CNTLBC1}$ $V_{CNTLBC2}$ $V_{CNTLBC3}$ $V_{CNTLCA1}$ $V_{CNTLCA2}$ $V_{CNTLCA3}$

F29 10A, F30 10A — FC1 TO ESS1BC — V_{ESS1BC} DA1 — F7 10A — V_{ESS1BC} FP&LC1

V_{ESS1BC} FD — FLIGHT DECK PANELS 1A — F9 ESS1BC VOLTS V — FC1 TO ESS1BC OFF S — V_{ESS1BC} FD

F2 7.5A — F3 15A — V_{ESS1BC} MPC1

MNB/C TO ESS1BC — F4 7.5A — V_{ESS1BC} APC4 — F8 15A — F10 7.5A — V_{ESS1BC} ALC1

MNB TO ESS1BC ON X — RPC 10A — F10 10A — V_{ESS1BC} 013&R14

MNB/C TO ESS1BC ON S — RPC 10A — F9 10A — V_{ESS1BC} ML86B

MNC TO ESS1BC ON X — RPC 10A — ESS1BC VOLTS V — F6 5A — V_{ESS1BC} CRYO 2

F5 5A — V_{ESS1BC} CRYO 4

V_{PRFLT1} M1A1A4&A14 — F9 15A — V_{PRFLT1} FP&LC1 — F10 5A — V_{PRFLT1} FNC1

F10 5A — V_{PRFLT1} MMC2&CRYO1&4

V_{PRFLT1} GSE — T-0 UMB — F7 10A — V_{PRFLT1} ALC1

RPC 15A

V_{MNA} MPC1 — RPC 15A — CAB PLA ON S — RPC 15A — AUXPLA ON X — RPC 20A — AUX PL ON S

V_{CABPL1} V_{CABPL2} V_{CABPL3}

ORB — V_{AUXPLA} — PL BAY — V_{AUXPLB}

V_{MNB} MPC2 — AUXPLB ON X — RPC 20A — CAB PLB ON S — RPC 15A — RPC 15A — RPC 15A — RPC 15A

F32 10A, F33 10A — FC2 TO ESS2CA — V_{ESS2CA} DA2 — F7 10A — V_{ESS2CA} FP&LC2

V_{ESS2CA} FD — FLIGHT DECK PANELS 1A — F9 ESS2CA VOLTS V — FC2 TO ESS2CA OFF S — V_{ESS2CA} FD

F2 7.5A — F3 15A — V_{ESS2CA} MPC2

MNC/A TO ESS2CA — F4 7.5A — V_{ESS2CA} APC5 — F8 15A — F10 7.5A — V_{ESS2CA} AP&LC2

MNC TO ESS2CA ON X — RPC 10A — F10 10A — V_{ESS2CA} 013&R14

MNC/A TO ESS2CA ON S — RPC 10A — F9 10A — V_{ESS2CA} ML86B

MNA TO ESS2CA ON X — RPC 10A — ESS2CA VOLTS V — F6 5A — V_{ESS2CA} CRYO 1

V_{PRFLT2} H23A2356 — F9 15A — V_{PRFLT2} FP&LC2 — F19 5A — V_{PRFLT2} FMC2

V_{PRFLT2} FP&LC3 — F10 5A — V_{PRFLT2} FMC3

V_{PRFLT2} GSE — T-0 UMB — F11 5A — V_{PRFLT2} MMC4&CRYO2&3

F7 10A — V_{PRFLT2} ALC2

F7 10A — V_{PRFLT2} ALC3

RPC 15A

V_{MNA} APC2 — F26 80A — AFT PL MNB ON X — C AFT PLB CURRENT — ORB — V_{AFTPLB} — PL BAY — V_{AFTPLC}

V_{MNC} APC3 — F13 80A — AFT PL MNC ON X — C AFT PLC CURRENT

V_{MNB} DA2 — MNB TO PRIPL ON X — (2 WIRES) — F39(40) 1504I 21 — F41(42) 1504I 21 — V_{PRIPL}

FC3 — FC3 TO PRIPL ON X

FC3 TO MNC ON & FC3 STRUCT RET ON X — V_{MNC} DA3 — MNC TO PRIPL ON X

FC3 STRUCTURE RET ON X

V_{MNC} RTN — V_{FC3} RTN — FC3

V_{PL} RTN

BUS NOMENCLATURE DEFINITION

DA	DISTRIBUTION ASSEMBLY
GSE	GROUND SUPPORT EQUIPMENT
FPC	FORWARD POWER CONTROLLER
MPC	MID POWER CONTROLLER
APC	AFT POWER CONTROLLER
FLC	FORWARD LOAD CONTROLLER
ALC	AFT LOAD CONTROLLER
FMC	FORWARD MOTOR CONTROL
MMC	MID MOTOR CONTROL
AMC	AFT MOTOR CONTROL
FP&LC	FORWARD POWER AND FORWARD LOAD CONTROLLERS
AP&LC	AFT POWER AND AFT LOAD CONTROLLERS
MA73C	MID DECK PANEL MA73C
ML86B	MID DECK PANEL ML86B
FD	FLIGHT DECK
M1A1A4&A14	MPC1, APC1, APC4 AND PANEL A14
M23A2356	MPC2, MPC3, APC2, APC3, APC5 AND APC6
LSRB	LEFT SOLID ROCKET BOOSTER
RSRB	RIGHT SOLID ROCKET BOOSTER
R14	PANEL R14
013	PANEL 013
013&R14	PANELS 013 AND R14
014&AB	PANELS 014 (RMS) AND AB (RMS)
015&A8&A8(OV-102)	PANELS 015 (RMS) AND A8 (RMS)
015&A7&A8(OV103, 104)	PANELS 015 (RMS), A7 (MADS) AND A8 (RMS)
016&RJD	PANEL 016 (RMS)
014	PANEL 014
015	PANEL 015
016	PANEL 016
R1A1	PANEL R1A1
A6&A14	PANEL A14 AND A6
A14	PANEL A14
PRIPL	PRIMARY PAYLOAD BUS
SECPL	SECONDARY PAYLOAD BUS
AUXPL	AUXILIARY PAYLOAD BUS
AFTPL	AFT PAYLOAD BUS
CABPL	ORBITER CABIN PAYLOAD BUS
CRYO1(2,3,4)	H_2/O_2 CRYO CONTROL BOX 1 (2,3,4)
MMC2&CRYO1&4	BUS THAT IS DISTRIBUTED TO BOTH THE MID MOTOR CONTROLLER 2 AND THE H_2/O_2 CRYO CONTROL BOX NO. 1 & 4
MMC4&CRYO2&3	BUS THAT IS DISTRIBUTED TO BOTH THE MID MOTOR CONTROLLER 4 AND THE H_2/O_2 CRYO CONTROL BOX NO. 2 & 3
POD/AMC1(2,3)	AC AND DC BUSES LOCATED IN THE AMC1(2,3) THAT ARE GENERATED SPECIFICALLY FOR THE OMS AND AFT RCS SYSTEMS
RCS/FMC1(2,3)	AC BUSES LOCATED IN THE FMC1(2,3) THAT ARE GENERATED SPECIFICALLY FOR THE FWD RCS SYSTEMS

CONTROL BUS-PANEL WIRING MATRIX

PANEL \ CNTL BUS	AB1	AB2	AB3	BC1	BC2	BC3	CA1	CA2	CA3
O6	X	X	X	X	X	X	X	X	X
O14	X	X	X				X	X	X
L2A1	X	X	X				X		
L1A2	X	X	X	X	X	X	X	X	X
L1A1							X		
F6	X		X		X		X	X	X
F2 (OV102)	X			X			X		
C3A7	X			X			X		
C3A1	X	X	X		X	X	X	X	X
C3A5	X	X	X	X	X	X	X	X	X
C3A6				X	X	X	X		
C2A2	X			X			X		
F4 (OV102)					X				
F8	X	X	X	X	X	X	X	X	X
O7	X	X	X	X	X	X	X	X	X
O15	X	X	X	X	X	X	X	X	X
R1A2	X	X	X	X	X	X	X	X	X
R2	X	X	X	X	X	X	X	X	X
R4	X	X	X	X	X	X	X	X	X
O16				X	X	X	X	X	X
O8	X	X	X	X	X	X	X	X	X
O17	X	X	X	X	X	X	X	X	X
R11A1	X	X	X	X	X	X			
R11A2				X	X	X	X	X	X
R13A2	X	X	X	X	X	X	X	X	X
A1A2	X	X	X	X	X	X	X	X	X
A1A3	X	X	X	X	X	X	X	X	X
A11A1				X	X	X	X		
A11A1 EDO UPPER (OV105)	X			X	X	X			X
A11A1 EDO LOWER (OV105)	X			X	X	X			X
A12	X	X	X	X	X	X	X	X	X
A6A1	X	X	X	X	X	X	X	X	X
A7A1	X	X	X	X	X	X	X	X	X
A8A2	X	X	X	X	X	X	X	X	X
A7A2 (OV102)									X
A13	X	X	X	X	X	X	X	X	X
A14	X	X	X	X	X	X	X	X	X
A15 TA5 (OV105)				X	X	X	X	X	X
A15 EDO (OV105)				X	X	X	X	X	X
MA73C	X	X	X	X	X	X	X	X	X

1. INSTALLED WITH MISSION KIT, FOR ORBITER DOCKING SYSTEM FLIGHTS. SEE DRAWING 2.6-1 FOR MORE DETAIL
2. FOR EDO PALLET POWER CONTROLLER BUSES (EDO MISSIONS ONLY, ALL VEHICLES EXCEPT OV-103), SEE DRAWING 2.5-1 FOR MORE DETAIL
3. ON OV-103 AND OV-104 ONLY, MISSION DEPENDENT
4. BUS IS 'DAISY-CHAINED' THROUGH A SERIES OF PANELS CNTL BUSES ARE FED BY THREE SOURCES, ONE RPC AT EACH END OF THE DAISY CHAIN (PANELS O6 & MA73C) AND A CIRCUIT BREAKER FEED AT THE MID-POINT (PANEL R2). THE BUS NOMENCLATURE IDENTIFIES WHICH MAIN BUS IS PROVIDING THE POWER. EXAMPLE: CNTLAB1-A MNA RPC FEEDS PANEL O6, A MNB RPC FEEDS MA73C, AND MNC FEEDS PANEL R2 THROUGH A CIRCUIT BREAKER SEE DRAWING 2.2-1 FOR MORE DETAIL
11. SEE TABLE 2-1 FOR DRAWING REFERENCES
10. NOT ON OV102
5. OV102 ONLY
8. FOR READABILITY, ON THIS DRAWING, RPC'S ARE SHOWN WITH POWER LEAD AT LEFT RATHER THAN THE TOP
6. PLACING FC3 TO MNC SW TO ON CAUSES FC3 STRUCT RET CONTACTOR TO CLOSE, ENSURING RETURN PATH FOR MNC CURRENT. PLACING FC3 TO MNC SW TO OFF DOES NOT AFFECT FC3 STRUCT RET CONTACTOR, THE 'OPEN' FUNCTION OF THIS MOTOR SWITCH HAS BEEN DISABLED
9. BUS IS 'DAISY-CHAINED' THROUGH A SERIES OF PANELS SEE DRAWING 2.2-1 FOR MORE DETAIL
7. VOLTAGE SENSING AND SWITCHOVER CIRCUITS. SRB POWER SOURCE TRANSFER TO MNC OCCURS AT <22 VDC FOR 40MS
4. FOR A LISTING OF DAC PANELS RECEIVING POWER FROM THE FOLLOWING BUSES, REFER TO TABLE 1-II-AC1(2,3), ALL CNTL BUSES, AND ESS1BC(2CA, 3AB) FD
1. SWITCHING AND CONTROL POWER - GSE ONLY
2. SWITCHING AND CONTROL POWER - ONBOARD OR GSE
3. SWITCHING AND CONTROL POWER - ONBOARD ONLY

NOTES:

* 1 EPS O/V

SIGNATURE		DATE
DSGN	L. DUMIS	10/2/78
DR	L. KEESLER	1/2/79
ENGR	M. MAHER	
ENGR		
APP		
APP		7/15/96
CADS		7/23/96

NATIONAL AERONAUTICS AND SPACE ADMINISTRATION LYNDON B. JOHNSON SPACE CENTER HOUSTON, TEXAS

EPS OVERVIEW

SPACE SHUTTLE — DWG NO 2.1

ALL — SHEET 1 OF 1

LTR E — PCN 6 — 126.5 X 34

BASIC REV E-6

8 7 6 5 4 3 2 1

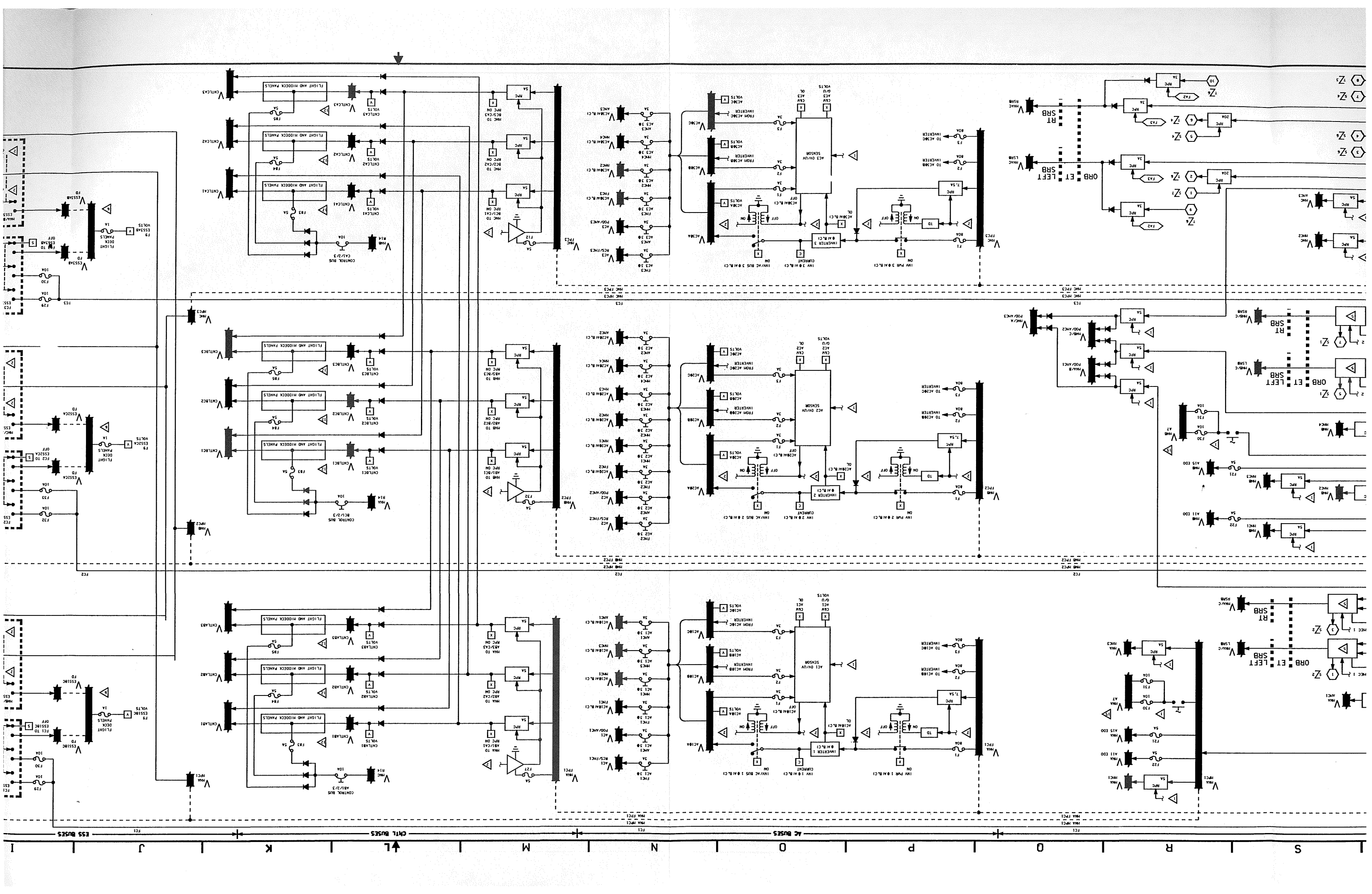
S
R
Q
P
O
N
M
L
K
J
I
AC BUSES
CNTL BUSES
ESS BUSES
FLIGHT AND HIDDECK PANELS
CONTROL BUS
INVERTER 1
INVERTER 2
INVERTER 3
ORB LEFT SRB
RT SRB

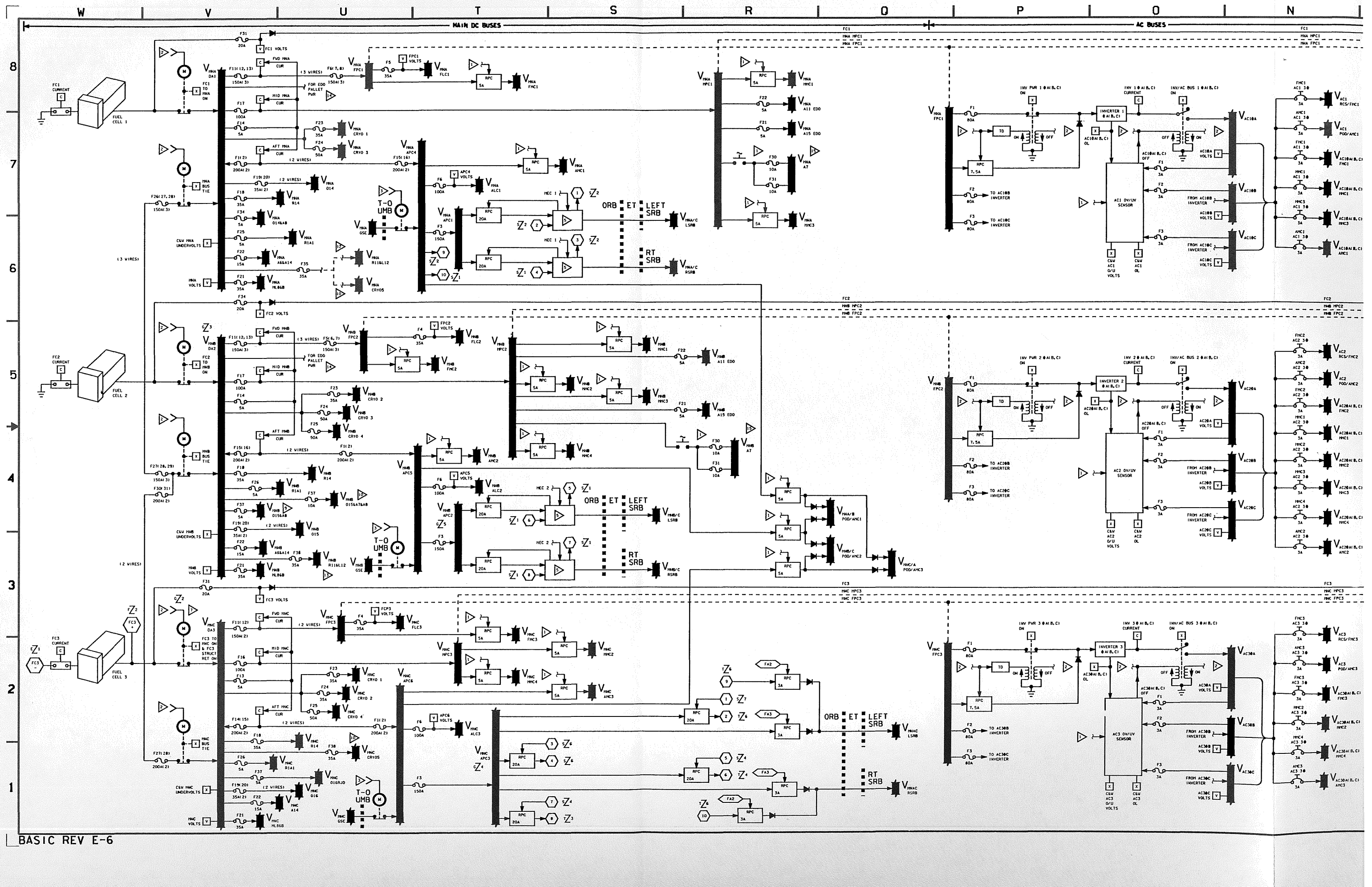
W
V
U
T
S
R
Q
P
O
N
MAIN DC BUSES
AC BUSES
8
7
6
5
4
3
2
1
FUEL CELL 1
FUEL CELL 2
FUEL CELL 3
FC1 CURRENT
FC2 CURRENT
FC3 CURRENT
FC1 VOLTS
FC2 VOLTS
FC3 VOLTS
FWD HNA CUR
MID HNA CUR
AFT HNA CUR
FWD HNB CUR
MID HNB CUR
AFT HNB CUR
FWD HNC CUR
MID HNC CUR
AFT HNC CUR
FC1 TO HNA ON
FC2 TO HNB ON
FC3 TO HNC ON & FC3 STRUCT RET ON
HNA BUS TIE
HNB BUS TIE
HNC BUS TIE
C&W HNA UNDERVOLTS
C&W HNB UNDERVOLTS
C&W HNC UNDERVOLTS
HNA VOLTS
HNB VOLTS
HNC VOLTS
FOR EDO PALLET PWR
T-0 UMB
ORB ET LEFT SRB
RT SRB
APC4 VOLTS
APC5 VOLTS
APC6 VOLTS
INV PWR 1 ØA(B,C) ON
INV PWR 2 ØA(B,C) ON
INV PWR 3 ØA(B,C) ON
INV 1 ØA(B,C) CURRENT
INV 2 ØA(B,C) CURRENT
INV 3 ØA(B,C) CURRENT
INV/AC BUS 1 ØA(B,C) ON
INV/AC BUS 2 ØA(B,C) ON
INV/AC BUS 3 ØA(B,C) ON
INVERTER 1 ØA(B,C)
INVERTER 2 ØA(B,C)
INVERTER 3 ØA(B,C)
TO AC1ØB INVERTER
TO AC1ØC INVERTER
TO AC2ØB INVERTER
TO AC2ØC INVERTER
TO AC3ØB INVERTER
TO AC3ØC INVERTER
FROM AC1ØB INVERTER
FROM AC1ØC INVERTER
FROM AC2ØB INVERTER
FROM AC2ØC INVERTER
FROM AC3ØB INVERTER
FROM AC3ØC INVERTER
AC1 DV/UV SENSOR
AC2 DV/UV SENSOR
AC3 DV/UV SENSOR
C&W AC1 O/U VOLTS
C&W AC2 O/U VOLTS
C&W AC3 O/U VOLTS
C&W AC1 OL
C&W AC2 OL
C&W AC3 OL
AC1ØA VOLTS
AC1ØB VOLTS
AC1ØC VOLTS
AC2ØA VOLTS
AC2ØB VOLTS
AC2ØC VOLTS
AC3ØA VOLTS
AC3ØB VOLTS
AC3ØC VOLTS
(3 WIRES)
(2 WIRES)
FC1 HNA MPC1
FC1 HNA FPC1
FC2 HNB MPC2
FC2 HNB FPC2
FC3 HNC MPC3
FC3 HNC FPC3

BASIC REV E-6

DATE: 10-12-91	NAME: SKK	VERSION: BPT: 14
DATE: 10/19/91	NAME: MDU	VERSION: INK: 10
DATE: 10/30/91	NAME: MAG	VERSION: INK: 11

FWD POWER CONTROLLER NO 1 (FPC 1)

FWD POWER CONTROLLER NO 2 (FPC 2)

FWD POWER CONTROLLER NO 3 (FPC 3)

AFT POWER CONTROLLER NO 4 (APC 4)

AFT POWER CONTROLLER NO 5 (APC 5)

AFT POWER CONTROLLER NO 6 (APC 6)

AFT PWR CNTLR NO 1 (APC 1)

AFT PWR CNTLR NO 2 (APC 2)

AFT PWR CNTLR NO 3 (APC 3)

AFT LOAD CONTROLLER NO 1 (ALC 1)

AFT LOAD CONTROLLER NO 2 (ALC 2)

AFT LOAD CONTROLLER NO 3 (ALC 3)

14. CONTROL POWER FOR LO2 AND LH2 17-INCH DISCONNECT LATCH INDICATION. SEE DRAWING VS70-410129

13. FOR OV105 ONLY, ESS3AB FD IS WIRED AS FOLLOWS:

12. FOR OV105 ONLY, ESS2CA FD IS WIRED AS FOLLOWS:

11. FOR OV105 ONLY, ESS1BC FD IS WIRED AS FOLLOWS:

10. TWO FUSED FEEDERS FROM MAIN DA2. FUSE NUMBER 41 AND 42 BOTH 35 AMPS AND ARE USED FOR MIDDECK ACCOMODATIONS RACK (MAR/MEP)

9. ON OV105 ONLY

8. ON OV103 AND OV104 ONLY, MISSION DEPENDENT

7. NOT ON OV102

6. SEE TABLE 2-I FOR DRAWING REFERENCES

5. FOR OV102, BUS NOMENCLATURE IS 'O15 & A8'

4. THE CONTROL BUS GOES THRU THIS PANEL ONLY ON OV102

3. (5A) OV102 ONLY

2. ALL FUSES ARE ASSUMED TO BE FAST-BLOW TYPE FUSES UNLESS OTHERWISE INDICATED. SLOW-BLOW FUSES ARE INDICATED WITH AN 'I.S1' FOLLOWING THE FUSE RATING. I.E., 35A (S)

NOTES: 1. FOR DWG CLARITY, RPC'S ARE DRAWN AS SHOWN

2 MN DC DIST 1

SIGNATURE	DATE	NATIONAL AERONAUTICS AND SPACE ADMINISTRATION LYNDON B. JOHNSON SPACE CENTER HOUSTON, TEXAS
DSGN THERESA M WISONG	9/21/87	
DR		
ENGR R. AL-AYOUBI		MAIN BUS DC DISTRIBUTION
ENGR	11/4/91	
APC	11/5/91	
APP		SPACE SHUTTLE / DWG NO 2.2
OMNIPLAN	11-12-91	ALL
LTR E PCN 1		126.5 X 34 / PAGE / SHEET 1 OF 3

BASIC REV E-1

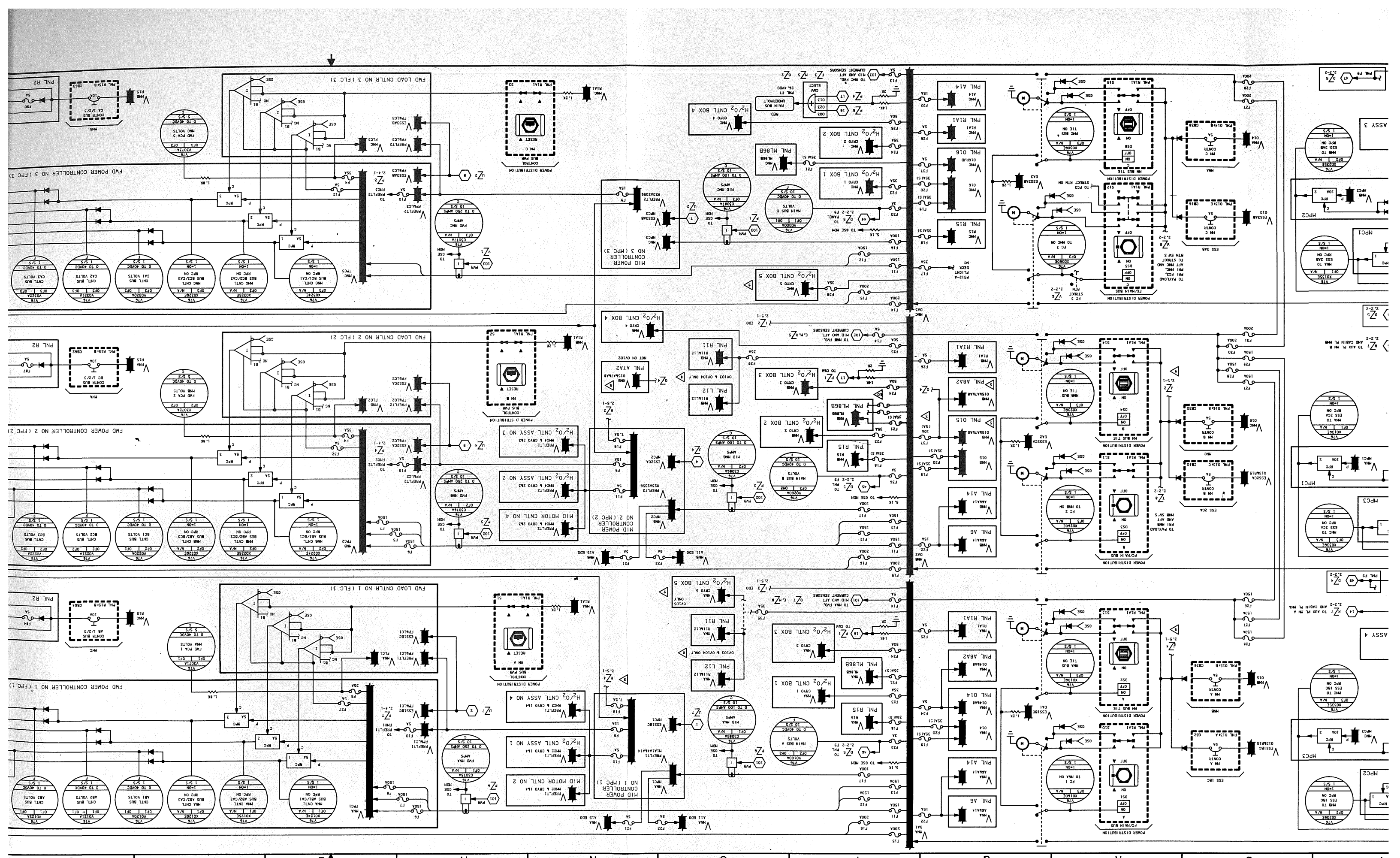
FWD LOAD CNTLR NO 3 (FLC 3)
FWD POWER CONTROLLER NO 3 (FPC 3)
FWD LOAD CNTLR NO 2 (FLC 2)
FWD POWER CONTROLLER NO 2 (FPC 2)
FWD LOAD CNTLR NO 1 (FLC 1)
FWD POWER CONTROLLER NO 1 (FPC 1)
MID POWER CONTROLLER NO 3 (MPC 3)
MID POWER CONTROLLER NO 2 (MPC 2)
MID POWER CONTROLLER NO 1 (MPC 1)
POWER DISTRIBUTION
FC/MAIN BUS
MAIN BUS TIE
PNL R1A1
PNL R1A2
PNL R1A3
PNL R1A4
PNL R1B1
PNL R1B2
PNL R1B3
PNL R1B4
PNL A14
PNL A46
PNL A68
PNL A8A2
PNL A4A3
PNL A2A4
PNL 016
PNL 015
PNL 014
PNL 013
PNL 012
PNL 011
PNL R15
PNL R2
PNL ML868
PNL L12
PNL R11
H2O2 CNTL BOX 1
H2O2 CNTL BOX 2
H2O2 CNTL BOX 3
H2O2 CNTL BOX 4
H2O2 CNTL BOX 5
H2O2 CNTL ASSY NO 1
H2O2 CNTL ASSY NO 2
H2O2 CNTL ASSY NO 3
H2O2 CNTL ASSY NO 4
MID MOTOR CNTL NO 2
MID MOTOR CNTL NO 4
MAIN BUS A VOLTS
MAIN BUS B VOLTS
MAIN BUS C VOLTS
FWD PCA 1 MAIN VOLTS
FWD PCA 2 MAIN VOLTS
FWD PCA 3 MAIN VOLTS
CONTR BUS CA 1/2/3
CONTR BUS BC 1/2/3
CONTR BUS AB 1/2/3
CNTL BUS CA1 VOLTS
CNTL BUS CA2 VOLTS
CNTL BUS CA3 VOLTS
CNTL BUS BC1 VOLTS
CNTL BUS BC2 VOLTS
CNTL BUS BC3 VOLTS
CNTL BUS AB1 VOLTS
CNTL BUS AB2 VOLTS
CNTL BUS AB3 VOLTS
MAIN CNTL BUS CA1/CA2 REF ON
MAIN CNTL BUS CA2/CA3 REF ON
MAIN CNTL BUS BC1/BC2 REF ON
MAIN CNTL BUS BC2/BC3 REF ON
MAIN CNTL BUS AB1/AB2 REF ON
MAIN CNTL BUS AB2/AB3 REF ON
MID MAIN AMPS
FWD MAIN AMPS
MID MAIN VOLTS
MAIN CNTL BUS CA1/CA2 REF ON
MAIN CNTL BUS CA2/CA3 REF ON
MAIN CNTL BUS BC1/BC2 REF ON
MAIN CNTL BUS BC2/BC3 REF ON
MAIN CNTL BUS AB1/AB2 REF ON
MAIN CNTL BUS AB2/AB3 REF ON
MAIN BUS TIE ON
MAIN BUS TIE OFF
MAIN BUS TIE 1-ON
FC 1 TO MAIN ON
FC 2 TO MAIN ON
FC 3 TO MAIN ON
FC 1 TO MAIN OFF
FC 2 TO MAIN OFF
FC 3 TO MAIN OFF
FC 1 TO PNL 1 ON
FC 2 TO PNL 2 ON
FC 3 TO PNL 3 ON
FC 1 TO PNL 1 OFF
FC 2 TO PNL 2 OFF
FC 3 TO PNL 3 OFF
MAIN TO ESS 1AB REF ON
MAIN TO ESS 2AB REF ON
MAIN TO ESS 3AB REF ON
MAIN TO ESS 1BC REF ON
MAIN TO ESS 2BC REF ON
MAIN TO ESS 3BC REF ON
MAIN TO ESS 1AB REF OFF
MAIN TO ESS 2AB REF OFF
MAIN TO ESS 3AB REF OFF
MAIN TO ESS 1BC REF OFF
MAIN TO ESS 2BC REF OFF
MAIN TO ESS 3BC REF OFF
PNL BUS TIE ON
PNL BUS TIE OFF
PNL BUS TIE 1-ON
PNL 1 TO MAIN ON
PNL 2 TO MAIN ON
PNL 3 TO MAIN ON
PNL 1 TO MAIN OFF
PNL 2 TO MAIN OFF
PNL 3 TO MAIN OFF
PNL 1 TO PNL 2 ON
PNL 2 TO PNL 3 ON
PNL 1 TO PNL 2 OFF
PNL 2 TO PNL 3 OFF
MAIN TO ESS 1AB REF ON
MAIN TO ESS 2AB REF ON
MAIN TO ESS 3AB REF ON
MAIN TO ESS 1BC REF ON
MAIN TO ESS 2BC REF ON
MAIN TO ESS 3BC REF ON
MAIN TO ESS 1AB REF OFF
MAIN TO ESS 2AB REF OFF
MAIN TO ESS 3AB REF OFF
MAIN TO ESS 1BC REF OFF
MAIN TO ESS 2BC REF OFF
MAIN TO ESS 3BC REF OFF
PNL BUS TIE ON
PNL BUS TIE OFF
PNL BUS TIE 1-ON
PNL 1 TO MAIN ON
PNL 2 TO MAIN ON
PNL 3 TO MAIN ON
PNL 1 TO MAIN OFF
PNL 2 TO MAIN OFF
PNL 3 TO MAIN OFF
PNL 1 TO PNL 2 ON
PNL 2 TO PNL 3 ON
PNL 1 TO PNL 2 OFF
PNL 2 TO PNL 3 OFF
MAIN TO ESS 1AB REF ON
MAIN TO ESS 2AB REF ON
MAIN TO ESS 3AB REF ON
MAIN TO ESS 1BC REF ON
MAIN TO ESS 2BC REF ON
MAIN TO ESS 3BC REF ON
MAIN TO ESS 1AB REF OFF
MAIN TO ESS 2AB REF OFF
MAIN TO ESS 3AB REF OFF
MAIN TO ESS 1BC REF OFF
MAIN TO ESS 2BC REF OFF
MAIN TO ESS 3BC REF OFF
PAYLOAD AND FWD MAIN SW'S
PAYLOAD AND AFT MAIN SW'S
FC STRICT MAIN ON
FC STRICT MAIN OFF
10 FC 3 STRICT MAIN ON
FC 3 STRICT MAIN
10 MAIN AFT CURRENT SENSORS
10 MAIN FWD CURRENT SENSORS
10 AUX PL MAIN
AUX CABIN PL MAIN
ASSY 3
ASSY 4
MPC1
MPC2
MPC3
MAIN CONTR
MAIN A CONTR
MAIN B CONTR
MAIN C CONTR
ESS 1AB
ESS 2AB
ESS 3AB
ESS 1BC
ESS 2BC
ESS 3BC
RESET
POWER DISTRIBUTION CONTROL BUS PWR
MAIN BUS PWR
MAIN C
MAIN A
MAIN B
MAIN LOADSWOLT
MAIN BUS LOADSWOLT
CWA ELECT
CWA
10 MAIN FWD CURRENT SENSORS
10 MAIN AFT CURRENT SENSORS
10 MAIN FWD MID AFT CURRENT SENSORS
10 MAIN AFT MID AFT CURRENT SENSORS
10 OSE MDM
10 OSE MDM
10 OAW
10 OAW
10 PAYLOAD
10 PAYLOAD
10 PAYLOAD

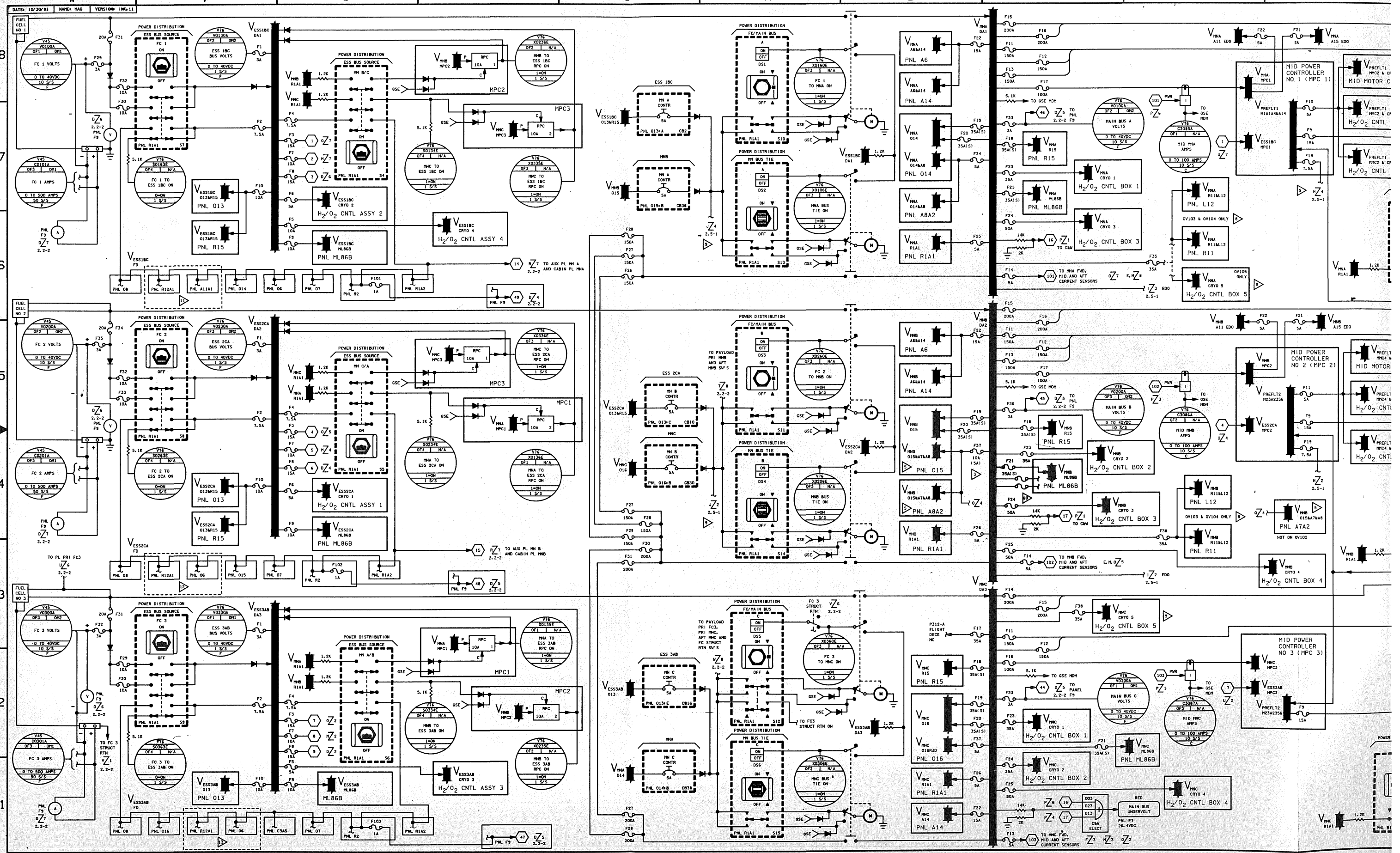
W
V
U
T
S
R
Q
P
O
N
8
7
6
5
4
3
2
1
DATE: 10/30/91
NAME: MAG
VERSION: INK,11
FUEL CELL NO 1
FUEL CELL NO 2
FUEL CELL NO 3
POWER DISTRIBUTION
ESS BUS SOURCE
FC 1 VOLTS
FC 1 AMPS
FC 2 VOLTS
FC 2 AMPS
FC 3 VOLTS
FC 3 AMPS
ESS 1BC
ESS 2CA
ESS 3AB
MPC1
MPC2
MPC3
H2/O2 CNTL ASSY 1
H2/O2 CNTL ASSY 2
H2/O2 CNTL ASSY 3
H2/O2 CNTL ASSY 4
H2/O2 CNTL BOX 1
H2/O2 CNTL BOX 2
H2/O2 CNTL BOX 3
H2/O2 CNTL BOX 4
H2/O2 CNTL BOX 5
MID POWER CONTROLLER NO 1 (MPC 1)
MID POWER CONTROLLER NO 2 (MPC 2)
MID POWER CONTROLLER NO 3 (MPC 3)
MAIN BUS A VOLTS
MAIN BUS B VOLTS
MAIN BUS C VOLTS
MID MNA AMPS
MID MNB AMPS
MID MNC AMPS
MAIN BUS UNDERVOLT
PNL R15
PNL ML86B
PNL L12
PNL R11
PNL A6
PNL A14
PNL A8A2
PNL R1A1
PNL 013
PNL 015
PNL 016
PNL A7A2
TO PAYLOAD PRI MNB AND AFT MNB SW'S
TO PAYLOAD PRI FC3, PRI MNC, AFT MNC AND FC STRUCT RTN SW'S
TO FC3 STRUCT RTN ON
TO MNA FWD, MID AND AFT CURRENT SENSORS
TO MNC FWD, MID AND AFT CURRENT SENSORS
TO AUX PL MN A AND CABIN PL MNA
TO AUX PL MN B AND CABIN PL MNB
TO PL PRI FC3
TO FC 3 STRUCT RTN
P312-A FLIGHT DECK NC
NOT ON OV102
OV103 & OV104 ONLY
OV105 ONLY

BASIC REV E-1

DATE= 9/18/90	NAME= VSH	VERSION= INK= 2
DATE= 10-12-91	NAME= SKK	VERSION= BPT= 5
DATE= 10/19/91	NAME= MDU	VERSION= INK= 3

ORB ET SRB

LSRB

RSRB

AFT LOAD CONTROLLER NO 3 (ALC 3)

AFT LOAD CONTROLLER NO 1 (ALC 1)

AFT LOAD CONTROLLER NO 2 (ALC 2)

AFT POWER CONTROLLER NO 1 (APC 1)

AFT POWER CONTROLLER NO 2 (APC 2)

AFT POWER CONTROLLER NO 3 (APC 3)

V76 X4395E OA1 N/A LSRB BUS C RPC A 1=ON 1 S/S

V76 X4395E OA3 N/A LSRB BUS C RPC C 1=ON 1 S/S

V76 X4394E OA3 N/A RSRB BUS C RPC C 1=ON 1 S/S

V76 X4394E OA1 N/A RSRB BUS C RPC A 1=ON 1 S/S

V76K6945X FA 3 V MNC APC3 C P RPC 3A 3

V76K6941X FA 4 V MNA APC4 C P RPC 3A 48

V76K6946X FA 3 V MNC APC3 C P RPC 3A 4

V76K6942X FA 4 V MNA APC4 C P RPC 3A 50

V MNA ALC 1 B1 N.C. I

V MNC ALC 3 E+ S- S+ II

V MNB ALC 2 B1 N.C. I

LSRB BUS A/C MNA PWR ON V76K7002B MEC 1

LSRB BUS A/C MNC PWR ENABLE V76K7011B MEC 1

LSRB BUS A/C MNC PWR INH V76K6755N LA-1

LSRB BUS B/C MNB PWR ON V76K7102B MEC 2

LSRB BUS B/C MNC PWR ENABLE V76K7111B MEC 2

LSRB BUS B/C MNC PWR INH V76K6757N LA-1

RSRB BUS A/C MNA PWR ON V76K7003B MEC 1

RSRB BUS A/C MNC PWR ENABLE V76K7012B MEC 1

RSRB BUS A/C MNC PWR INH V76K6756N LA-1

RSRB BUS B/C MNB PWR ON V76K7103B MEC 2

RSRB BUS B/C MNC PWR ENABLE V76K7112B MEC-2

RSRB BUS B/C MNC PWR INH V76K6758N LA-1

V ESS3AB AP&LC 3 A1 A2 T1 T2 N.S.

V76 X6775E OA1 N/A LSRB BUS A/C BU PWR ON 1=MNC ON 1 S/S

V76 X6776E OA1 N/A RSRB BUS A/C BU PWR ON 1=MNC ON 1 S/S

V76 X6777E OA2 N/A LSRB BUS B/C BU PWR ON 1=MNC ON 1 S/S

V76 X6778E OA2 N/A RSRB BUS B/C BU PWR ON 1=MNC ON 1 S/S

15K 20A 3 20A 5 20A 4 20A 2 20A 27 20A 25 20A 26 20A 24

V MNAC LSRB

V MNA/C LSRB

V MNB/C LSRB

V MNAC RSRB

V MNA/C RSRB

V MNB/C RSRB

5.1K

B76 V16600C LL1 N/A LSRB BUS A/C VOLTS 0 TO 40 VDC 10 S/S

B76 V16601C LL1 N/A LSRB BUS B/C VOLTS 0 TO 40 VDC 10 S/S

B76 V26600C LR1 N/A RSRB BUS A/C VOLTS 0 TO 40 VDC 10 S/S

B76 V26601C LR1 N/A RSRB BUS B/C VOLTS 0 TO 40 VDC 10 S/S

TO GSE

7.5K

STRIBUTION

Xo=1307 A C J498

Xo=1307 A C J499

PNL F9 METER

FC 3 AMPS
FC 2 AMPS
FC 1 AMPS
SIGNAL STRENGTH INPUTS
FC 3 RTN
FC 2 RTN
FC 1 RTN
SIGNAL STRENGTH RTN

DC AMPS SIG STR 0 90 100 200 300 400 500 350

MAIN VOLTS A B C
SIGNAL STRENGTH
ESS 3AB VOLTS
ESS 2CA VOLTS
ESS 1BC VOLTS
1 FUEL CELL VOLTS/AMP 2 3 (S2)

FC 3 VOLTS
FC 2 VOLTS
FC 1 VOLTS
MN C VOLTS
MN B VOLTS
MN A VOLTS
ESS 3AB VOLTS
ESS 2CA VOLTS
ESS 1BC VOLTS

DC VOLTS 20 25 30 35 40 45 28 26.4 32

MAIN DISTRIBUTION ASSY NO. 3
MAIN DISTRIBUTION ASSY NO. 2
MAIN DISTRIBUTION ASSY NO. 1

RPC FUNCTIONAL DIAGRAM

POWER IN
POWER TO ALL COMPONENTS
POWER ON PULSE GENERATOR
SET PULSE
CURRENT SHUNT
OVER CURRENT DETECTOR
>150% RATED LOAD
LOAD POWER OUT
DRIVE AMPL
CNTL INPUT
4K
THRESHOLD DETECTOR
>10.5±1.5VDC
0.6±1VDC
S Q FF R Q̄
>0.35VDC TURN ON
DELTA VOLTS DETECTOR
TD 2-3 SEC
GND
OPERATE POWER
CONTROL SIGNAL
RPC XXA LOAD

TYPE II DRIVER FUNCTIONAL SCHEMATIC

POWER
3A
REFERENCE VOLTAGE GENERATOR
E+
S-
S+
OUTPUT
GROUND

TYPE II DRIVER LOGIC INPUT TRUTH TABLE

A1	A2	N	T1	T2	SWITCH STATE
1	1	0	GND	X	ON (40 ms DELAY)
1	1	0	OPEN	GND	ON (1 sec DELAY)
1	1	0	OPEN	OPEN	ON (4 sec DELAY)
0	X	X	X	X	OFF
X	0	X	X	X	OFF
X	X	1	X	X	OFF

13. WIRE CUT AND CAPPED ON ALL VEHICLES
12. RESERVED
11. GREEN= RED=
10. THE OPEN FUNCTION OF THIS SWITCH HAS BEEN DISABLED. (MCR-11945)
9. SEE TABLE 2-I FOR DRAWING REFERENCES
8. A SRB POWER SOURCE TRANSFER TO MNC OCCURS AT (22.0 VDC FOR 40 MILLISECONDS
7. PWR FROM VMNC APC6 VIA RPC POWERING OA2 AND OA3 DSC'S. SEE DRAWING 17.1 ZONE N2
6. PWR FROM VMNB APC5 VIA RPC POWERING OA1 AND OA2 MDM'S. SEE DRAWING 17.1 ZONE M6
5. THE SRB BUSES ARE ACTIVATED DURING PRE-LAUNCH BY LPS COMMANDS TO THE GND MDM'S, TO THE GPC'S TO THE MEC'S TO THE RPC'S. (THE MEC LATCHES THE CONTROL SIGNALS ON UNTIL POWER IS REMOVED FROM THE MEC)
4. ALL FUSES ARE OF THE FAST-BLOW TYPE UNLESS INDICATED BY AN "(S)" FOLLOWING THE FUSE RATING, E.G. 3A(S)
3. OUTPUT POWER TRANSISTOR REPRESENT SEVERAL TRANSISTORS IN PARALLEL (ONE FOR EACH AMP OF RPC RATING)
2. CONTROL SIGNAL INPUT (6± VDC OR APPLICATION OF LINE VOLTAGE SETS FLIP FLOP
NOTES: 1. TIME DELAY IS RESET AT A 10 TO 1 RATIO (1m AFTER TRIP-OFF, OVERCURRENT SIGNAL MUST REMAIN OFF 20 SEC FOR A TD RESET TO 2 SEC)

2 DC 2

SIGNATURE		DATE
DSGN	K. CHARLSON	3/20/79
DR	MELVIN JAMES	3/21/79
ENGR	R. AL-AYOUBI	
ENGR		10/23/91
APE		10/24/91
APP		
OMNIPLAN	S.K. Endres	11-1-91
LTR	E	PCN 1

NATIONAL AERONAUTICS AND SPACE ADMINISTRATION LYNDON B. JOHNSON SPACE CENTER HOUSTON, TEXAS

MAIN BUS DC DISTRIBUTION

SPACE SHUTTLE | DWG NO 2.2

ALL

121 X 34 | PAGE | SHEET 2 OF 3

BASIC REV E-1

PAYLOAD POWER DISTRIBUTION

AFT POWER CONTROLLER NO 3 (APC3)

AFT POWER CONTROLLER NO 2 (APC2)

MID POWER CONTROLLER NO 2 (MPC2)

MID POWER CONTROLLER NO 1 (MPC1)

POWER DISTRIBUTION AFT PAYLOAD MNC

POWER DISTRIBUTION PAYLOAD

FC 3 STRUCT MTN

PWL A12

PWL R1A1 S30

PWL R1A1 S31

PWL R1A1 S32

PWL R1A1 S25

PWL R1A1 S26

PWL R1A1 S27

PWL R1A1 S28

PWL R1A1 S29

MNC MTN

MNC APC3

MNC ALC 3

MNC APC4

MNA APC4

MNB APC2

MNB MPC2

MNA MPC1

MNC MPC3

MNC D43

MNB D42

MNC D16

MNC D17

MNC D18

MNC D19

MNC D20

MNC D21

MNC D22

MNC D23

MNC D24

MNC D25

MNC D26

MNC D27

MNC D28

MNC D29

MNC D30

MNC D31

MNC D32

MNC D33

MNC D34

MNC D35

MNC

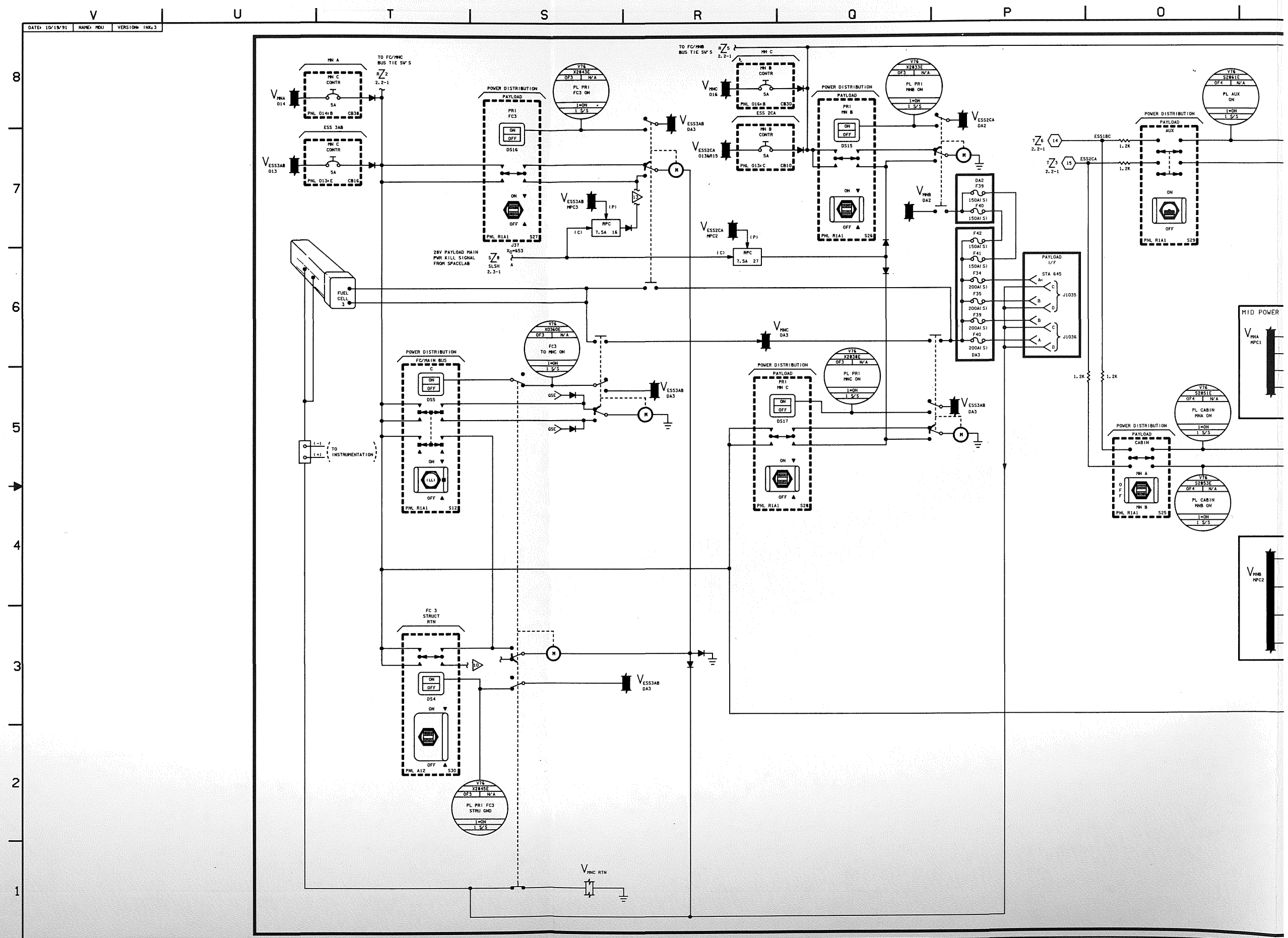
DATE: 10/19/91
NAME: MDU
VERSION: INK,3
V
U
T
S
R
Q
P
O
8
7
6
5
4
3
2
1
MN A
MN C CONTR
ESS 3AB
TO FC/MNC BUS TIE SW'S
POWER DISTRIBUTION
PAYLOAD
PRI FC3
DS16
PL PRI FC3 ON
28V PAYLOAD MAIN PWR KILL SIGNAL FROM SPACELAB
FUEL CELL 3
TO INSTRUMENTATION
FC/MAIN BUS
DS5
FC3 TO MNC ON
FC 3 STRUCT RTN
DS4
PL PRI FC3 STRU GND
MN B CONTR
ESS 2CA
PRI MN B
DS15
PL PRI MNB ON
PAYLOAD I/F
STA 645
J1035
J1036
PRI MN C
DS17
PL PRI MNC ON
PAYLOAD AUX
PL AUX ON
PAYLOAD CABIN
MN A
MN B
PL CABIN MNA ON
PL CABIN MNB ON
MID POWER
MNA MPC1
MNB MPC2
MNC RTN

BASIC REV E-1

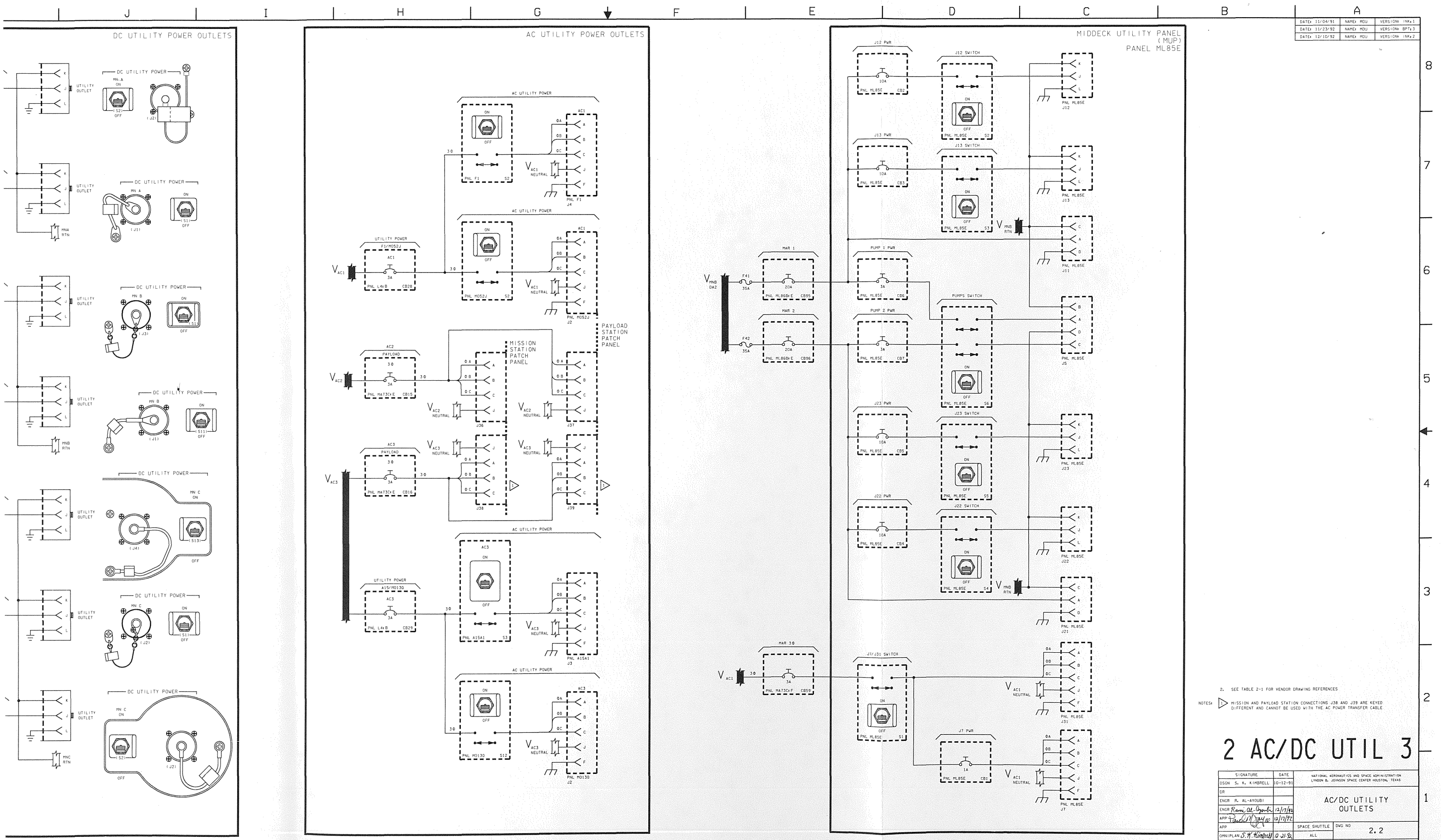

DATE: 11/04/91	NAME: MDU	VERSION: INK:1
DATE: 11/23/92	NAME: MDU	VERSION: BPT:3
DATE: 12/10/92	NAME: MDU	VERSION: INK:2

2. SEE TABLE 2-1 FOR VENDOR DRAWING REFERENCES

NOTES: 1. MISSION AND PAYLOAD STATION CONNECTIONS J38 AND J39 ARE KEYED DIFFERENT AND CANNOT BE USED WITH THE AC POWER TRANSFER CABLE

2 AC/DC UTIL 3

SIGNATURE	DATE	NATIONAL AERONAUTICS AND SPACE ADMINISTRATION LYNDON B. JOHNSON SPACE CENTER HOUSTON, TEXAS
DSGN S. K. KIMBRELL	10-12-91	
DR		AC/DC UTILITY OUTLETS
ENGR R. AL-AYOUBI		
ENGR Rami Al-Ayoubi	12/17/92	
APP Paul M. Jayoo	12/17/92	
APP		SPACE SHUTTLE ALL — DWG NO 2.2
OMNIPLAN S. K. Kimbrell	12-21-92	
LTR E — PCN 2		66 X 34 — PAGE — SHEET 3 OF 3

BASIC REV E-2

DC UTILITY POWER OUTLETS

AC UTILITY POWER OUTLETS

DATE: 10/02/90	NAME: JDF	VERSION: INK: 7
DATE: 10-12-91	NAME: SKK	VERSION: BPT: 11
DATE: 10/15/91	NAME: MDU	VERSION: INK: 8

INVERTER DISTRIBUTION AND CONTROL ASSY 3 (IDCA3)

INVERTER DISTRIBUTION AND CONTROL ASSY 2 (IDCA2)

INVERTER DISTRIBUTION AND CONTROL ASSY 1 (IDCA1)

(V76C1640A) (V76C1740A)
V76 C1540A
(OF2) (OF3) OF1 N/A
AC1 ΦA AMPS
0 TO 20 AMPS 10 S/S C

(V76V1600A) (V76V1700A) ▷
V76 V1500A
(OF2) (OF3) OF1 (OF2) (OF3) OF1
AC1 ΦA VOLTS
0 TO 140VAC 10 S/S P

(V76V1601A) (V76V1701A) ▷
V76 V1501A
(OF2) (OF3) OF1 (OF2) (OF3) OF1
AC1 ΦB VOLTS
0 TO 140VAC 10 S/S P

(V76V1602A) (V76V1702A) ▷
V76 V1502A
(OF2) (OF3) OF1 (OF2) (OF3) OF1
AC1 ΦC VOLTS
0 TO 140VAC 10 S/S P

AC2
ΦA ΦB ΦC
AC1 ΦB
ΦC ΦA
ΦA ΦB AC3
ΦB ΦC

AC3ΦC
AC3ΦB
AC3ΦA
AC2ΦC
AC2ΦB
AC2ΦA
AC1ΦC
AC1ΦB
AC1ΦA

30 V_{AC3}
30 V_{AC2}
30 V_{AC1} 2

AC3 NEUTRAL
AC2 NEUTRAL
AC1 NEUTRAL

PNL F9 S1

110 100 120 90 AC VOLTS 130
PNL F9 M1

AC1 (2,3) BUS VOLTAGE SENSOR

28V POWER TO ALL OUTPUT SIGNAL DRIVERS
VOLTAGE REG 10VDC POWER TO ALL CIRCUITS
TD 0.5 SEC SET AND RESET
1=ENABLE
PHASE A SENSOR
PHASE B SENSOR
PHASE C SENSOR
ΦA G/V ΦB G/V ΦC G/V
ΦA U/V ΦB U/V ΦC U/V
AC G/V-U/V DETECTOR
G/V >123 TO 127 VOLTS
U/V <102 TO 108 VOLTS
TD 50 TO 90 MS
TD 6.5 TO 8.5 SEC
D FF CK CLR Q=RESET
J K FF CK CLR Q=RESET
OL
POSITIVE TRANSITION TRIGGER
MONITOR
G/V OR OL

(OF2) (OF3) V76 X1537E OF1 N/A
AC1 ΦA BUS ON
1=ON 1 S/S
(V76X1637E) (V76X1737E)

(OF2) (OF3) V76 X1538E OF1 N/A
AC1 ΦB BUS ON
1=ON 1 S/S
(V76X1638E) (V76X1738E)

(OF2) (OF3) V76 X1539E OF1 N/A
AC1 ΦC BUS ON
1=ON 1 S/S
(V76X1639E) (V76X1739E)

ΦA VOLTS
ΦB VOLTS
ΦC VOLTS
ΦA OVERLOAD
ΦB OVERLOAD
ΦC OVERLOAD
ΦA AUTO TRIP
ΦB AUTO TRIP
ΦC AUTO TRIP

0.5A F4
3A F1
0.5A F5
3A F2
0.5A F6
3A F3
ΦA
ΦB
ΦC

$V_{AC1(2,3)\Phi A}$
$V_{AC1(2,3)\Phi B}$
$V_{AC1(2,3)\Phi C}$

$V_{PREFLT1}$ (2,2)
OFF
LF1
GSE
K3 ΦC BUS ON
OFF

(OF2) (OF3) V76 X1505E OF1 N/A
AC1 G/V-U/V
1=ALARM 1 S/S C
(V76X1605E) (V76X1705E)

AC3 (53)
AC2 (43)
AC1 (33)
G/V-U/V
YELLOW AC VOLTAGE PNL F7A2
AC PHASE VOLTAGE <102 TO 108 VOLTS FOR 6.5 TO 8.5 SECS OR >123 TO 127 VOLTS FOR 50 TO 90 MS

DZ3 5.6-2

C&W ELECTRONICS

CZ3 5.6-2

AC3 (83)
AC2 (73)
AC1 (63)
OVERLOAD
YELLOW AC OVERLOAD PNL F7A2 ▷
AC PHASE INVERTER CURRENT >14.5 AMPS FOR 10 TO 20 SECS OR >17.3 TO 21.1 AMPS FOR 4 TO 6 SECONDS

(OF2) (OF3) V76 X1506E OF1 N/A
AC1 OVERLOAD
1=ALARM 1 S/S P
(V76X1606E) (V76X1706E)

12. SEE TABLE 2-1 FOR VENDOR DRAWING REFERENCES

1▷ SYNC WIRES EXTERNAL TO INVERTER BOX. FOR CONTINGENCIES, SYNC WIRES CAN BE INTERCHANGED WITHOUT INVERTER BOX REMOVAL

2▷ FUSE REPLACEMENT REQUIRES INTERNAL LRU ACCESS

3▷ RED
BACKUP C/W ALARM
PNL F7A2

THE FOLLOWING BACKUP C/W ALARM PARAMETERS ARE MONITORED IN BFS AND/OR SM OPS 2 SOFTWARE. 'M' COUNT IS 2 ON ALL PARAMETERS

PARAMETER	LIMIT LOW	LIMIT HIGH	LIMIT UNITS	GPC S/S	CRT MESSAGE
V76V1500A	108	123	VAC	1	S67 (SM1) AC VOLTS 1
V76V1501A	108	123	VAC	1	
V76V1502A	108	123	VAC	1	
V76X1505E	OVLD		EVENT	1	S67 (SM1) AC OVLD 1
V76V1600A	108	123	VAC	1	
V76V1601A	108	123	VAC	1	S67 (SM1) AC VOLTS 2
V76V1602A	108	123	VAC	1	
V76X1605E	OVLD		EVENT	1	S67 (SM1) AC OVLD 2
V76V1700A	108	123	VAC	1	
V76V1701A	108	123	VAC	1	S67 (SM1) AC VOLTS 3
V76V1702A	108	123	VAC	1	
V76X1706E	OVLD		EVENT	1	S67 (SM1) AC OVLD 3

4▷ INVERTER OVERLOAD CURRENT VALUES CORRESPOND TO INVERTER TRANSFORMER T1 OUTPUT. THE 10 μFD CAPACITOR BETWEEN TRANSFORMER T1 AND THE BUS CURRENT SENSORS WILL CAUSE THE INVERTER CURRENT TO DIFFER FROM AC BUS CURRENT AS A FUNCTION OF LOAD POWER FACTOR (PF). BUS LOAD POWER FACTOR IS NOT MEASURED BUT WILL NORMALLY BE 0.6 TO 0.8 LAGGING (-).

$I_{(BUS\ AMPS)} = 2.95\sqrt{1-(PF)^2} + \sqrt{I_{(INV\ CUR)}^2 - 8.7(PF)^2}$

INV CUR PCT RATED	INV CUR AMPS	BUS AMPS AT BUS PF -.6	-.7	-.8	-.9	-.95	1.0
100	6.4	8.5	8.2	7.7	7.1	6.7	5.7
150	9.6	11.8	11.5	11.1	10.5	10.1	9.1
200	12.8	15.0	14.7	14.4	13.8	13.4	12.5
225	14.5	16.8	16.5	16.1	15.5	15.1	14.2
300	19.2	21.5	21.2	20.8	20.3	19.9	19.0

5▷ THE MTU REFERENCE SIGNAL HAS BEEN DISCONNECTED TO PREVENT MTU FAILURE MODES FROM CAUSING ALL NINE AC PHASE INVERTERS TO LOSE PHASE AND FREQUENCY SYNCHRONIZATION

6. EACH COLDPLATE COOLED AC PHASE INVERTER IS THERMALLY LIMITED TO LOADS OF:
   A. 6.4 AMPS (100 PCT) CONTINUOUSLY
   B. 8.3 AMPS (130 PCT) FOR 4 HOURS
   C. 9.6 AMPS (150 PCT) FOR 30 MINUTES
   D. 12.8 AMPS (200 PCT) FOR 2 MINUTES

5. EACH AC PHASE INVERTER IS RATED AT:
   VOLTAGE - 117 +3, -1 VOLTS RMS
   VOLT AMPS - 750 FOR PF FROM 0.7 LAG TO 0.9 LEAD
   FREQUENCY - 400 ± 2 HZ (WITH MTU SYNC)
   400 ± 7 HZ (WITHOUT MTU SYNC)
   WAVE SHAPE - SINE

4. AC PHASE CURRENT AND VOLTAGE MEASUREMENTS ARE ALSO AVAILABLE PRELAUNCH AT THE LH T-0 UMBILICAL.

3▷ EACH AC PHASE OUTPUT VOLTAGE IS CONTROLLED BY A REFERENCE SINE WAVE SIGNAL WHOSE ZERO VOLTAGE CROSSOVER POINT IS PHASE SYNCHRONIZED IN EACH THREE PHASE INVERTER ARRAY TO 120 ± 1.5 DEG. PHASE ROTATION IS A,B,C MAXIMUM CURRENT LIMITING CLIPS THE REFERENCE VOLTAGE PEAKS

2▷ EACH AC BUS CAN BE ISOLATED (UNLOADED) BY OPENING THE APPROPRIATE AC BUS CIRCUIT BREAKERS ON PANELS MA73C AND L4

NOTES: 1. AC 1 SYSTEM SHOWN. AC 2 AND AC 3 SYSTEMS OPERATE THE SAME EXCEPT AS SHOWN

3 AC

SIGNATURE	DATE	
DSON VICKI S. DOGGETT	5/23/79	NATIONAL AERONAUTICS AND SPACE ADMINISTRATION LYNDON B. JOHNSON SPACE CENTER HOUSTON, TEXAS
DR		
ENGR J. AZBELL		AC GENERATION AND DISTRIBUTION
ENGR J. Azbell	11/28/91	
APP	11/29/91	
APP		SPACE SHUTTLE
OMNIPLAN S.K. Kimbrell	11-1-91	ALL
LTR E PCN 1		126.5 X 34 PAPER

DWG NO 2.3
SHEET 1 OF 1

BASIC REV E-1

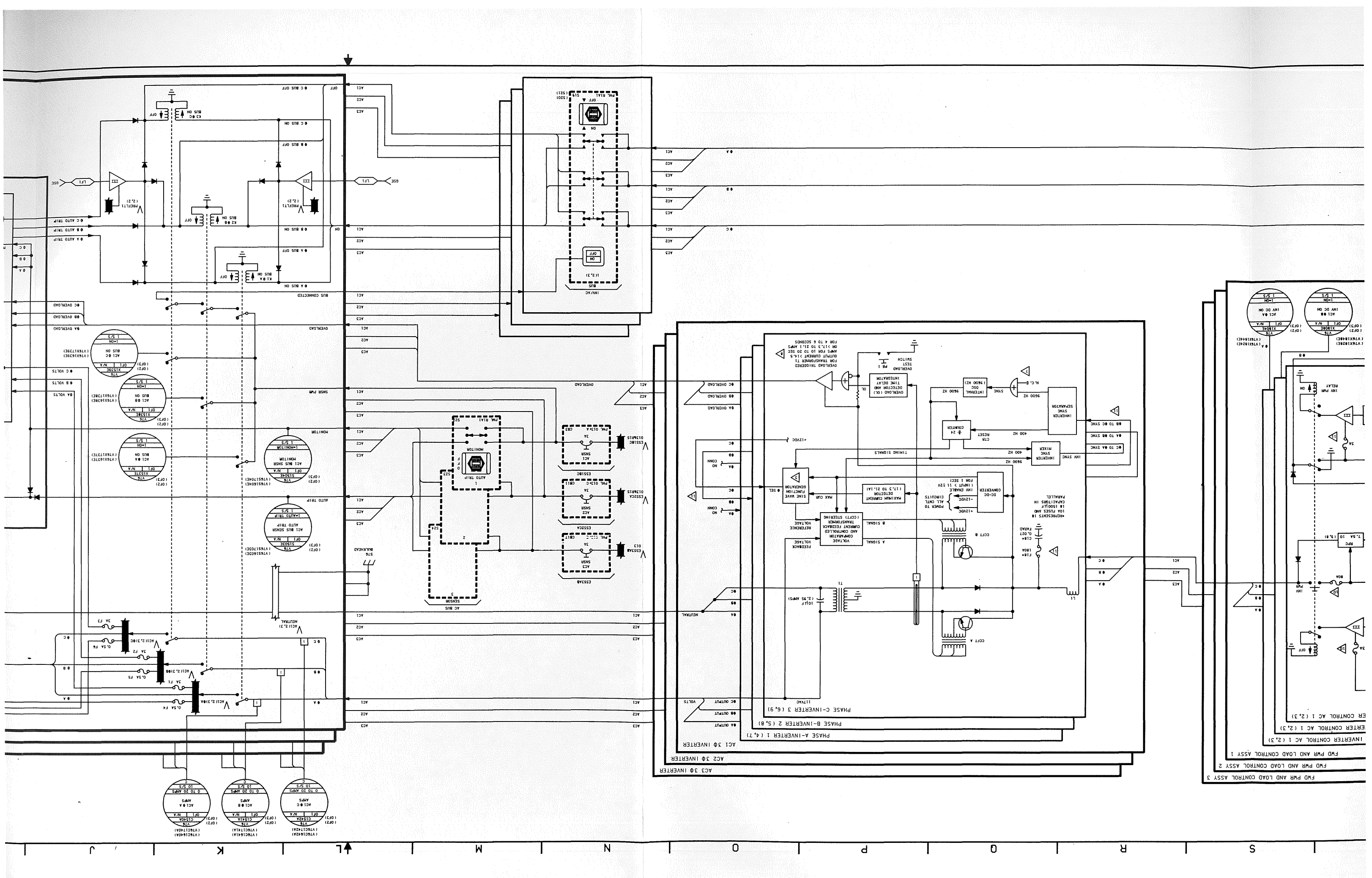
AC3 3Φ INVERTER
AC2 3Φ INVERTER
AC1 3Φ INVERTER
PHASE A-INVERTER 1 (4,7)
PHASE B-INVERTER 2 (5,8)
PHASE C-INVERTER 3 (6,9)
INVERTER CONTROL AC 1 (2,3)
FWD PWR AND LOAD CONTROL ASSY 1
FWD PWR AND LOAD CONTROL ASSY 2
FWD PWR AND LOAD CONTROL ASSY 3
INV/AC BUS
AC BUS
SENSOR
SYNC
OVERLOAD
OVERLOAD TRIGGERED FROM TRANSFORMER T1 OUTPUT CURRENT >14.5 AMPS FOR 3 TO 20 SEC OR >17.3 TO 21.1 AMPS FOR 4 TO 6 SECONDS
OVERLOAD TEST SWITCH
OVERLOAD (O.L.) DETECTION AND INTEGRATION TIME DELAY
INTERNAL OSC
INVERTER SYNC SEPARATOR
INVERTER MIXER
COUNTER
CTR RESET
TIMING SIGNALS
DC-DC CONVERTER
POWER TO ALL CNTL CIRCUITS
INV ENABLE (INPUT) 11-32V FOR 1 SEC)
MAXIMUM CURRENT DETECTOR
SINE WAVE FUNCTION GENERATOR
VOLTAGE AND CONTROLLED CURRENT FEEDBACK TRANSFORMER (CCFT) STEERING
FEEDBACK VOLTAGE
A SIGNAL
B SIGNAL
CCFT A
CCFT B
T1
L1
10µF (2.35 AMPS)
#REPRESENTS 1Ø 10A FUSES AND 1Ø 1500µF CAPACITORS IN PARALLEL
F1Ø* 10A
C1Ø* 0.027 FARAD
PWR RELAY
INV PWR
INV DC ON
ACT ΦA
ACT ΦB
ACT ΦC
ΦA TO 0C SYNC
ΦB TO 0C SYNC
ΦC TO 0A SYNC
ΦA TO ΦB SYNC
ΦB TO ΦC SYNC
ΦC TO ΦA SYNC
ΦA BUS ON
ΦB BUS ON
ΦC BUS ON
ΦA BUS OFF
ΦB BUS OFF
ΦC BUS OFF
ΦA AUTO TRIP
ΦB AUTO TRIP
ΦC AUTO TRIP
BUS CONNECTED
ΦA OVERLOAD
ΦB OVERLOAD
ΦC OVERLOAD
ΦA VOLTS
ΦB VOLTS
ΦC VOLTS
MONITOR
AUTO TRIP
SNSR PWR
NEUTRAL
BULKHEAD
PWR RLA1
PWR RLA2
PWR RLA3
ESS1AB
ESS2CA
ESS3BC
Q1
Q2
Q3
CB1
CB2
CB3
PREFLT1 (2,2)
ACT (2,3)
ACT (2,3)ΦA
ACT (2,3)ΦB
ACT (2,3)ΦC
3A F1
3A F2
3A F3
0.5A F4
0.5A F5
0.5A F6
ACT ΦA
ACT ΦB
ACT ΦC
0 TO 20 AMPS
10 S/S
1=ON
1 S/S
1=MONITOR
1=AUTO TRIP
OFF
ON
N/A
V16
X1536E
X1537E
C1542A
C1541A
C1540A
(OF2)
(OF3)
(OF1)
(V16X1639E)
(V16X1738E)
(V16X1637E)
(V16X1737E)
(V16S1640A)
(V16S1641A)
(V16S1642A)
(V16S1710E)
(V16S1711E)
(V16S1712E)
(V16S1644E)
(V16X1624E)
(V16X1644E)
(V16X1645E)
(V16X1646E)
(V16X1647E)
(V16X1648E)
(V16X1649E)
(V16X1650E)
(V16X1651E)
(V16X1652E)
(V16X1653E)
(V16X1654E)
(V16X1655E)
(V16X1656E)
(V16X1657E)
(V16X1658E)
(V16X1659E)
(V16X1660E)
(V16X1661E)
(V16X1662E)
(V16X1663E)
(V16X1664E)
(V16X1665E)
(V16X1666E)
(V16X1667E)
(V16X1668E)
(V16X1669E)
(V16X1670E)
(V16X1671E)
(V16X1672E)
(V16X1673E)
(V16X1674E)
(V16X1675E)
(V16X1676E)
(V16X1677E)
(V16X1678E)
(V16X1679E)
(V16X1680E)
(V16X1681E)
(V16X1682E)
(V16X1683E)

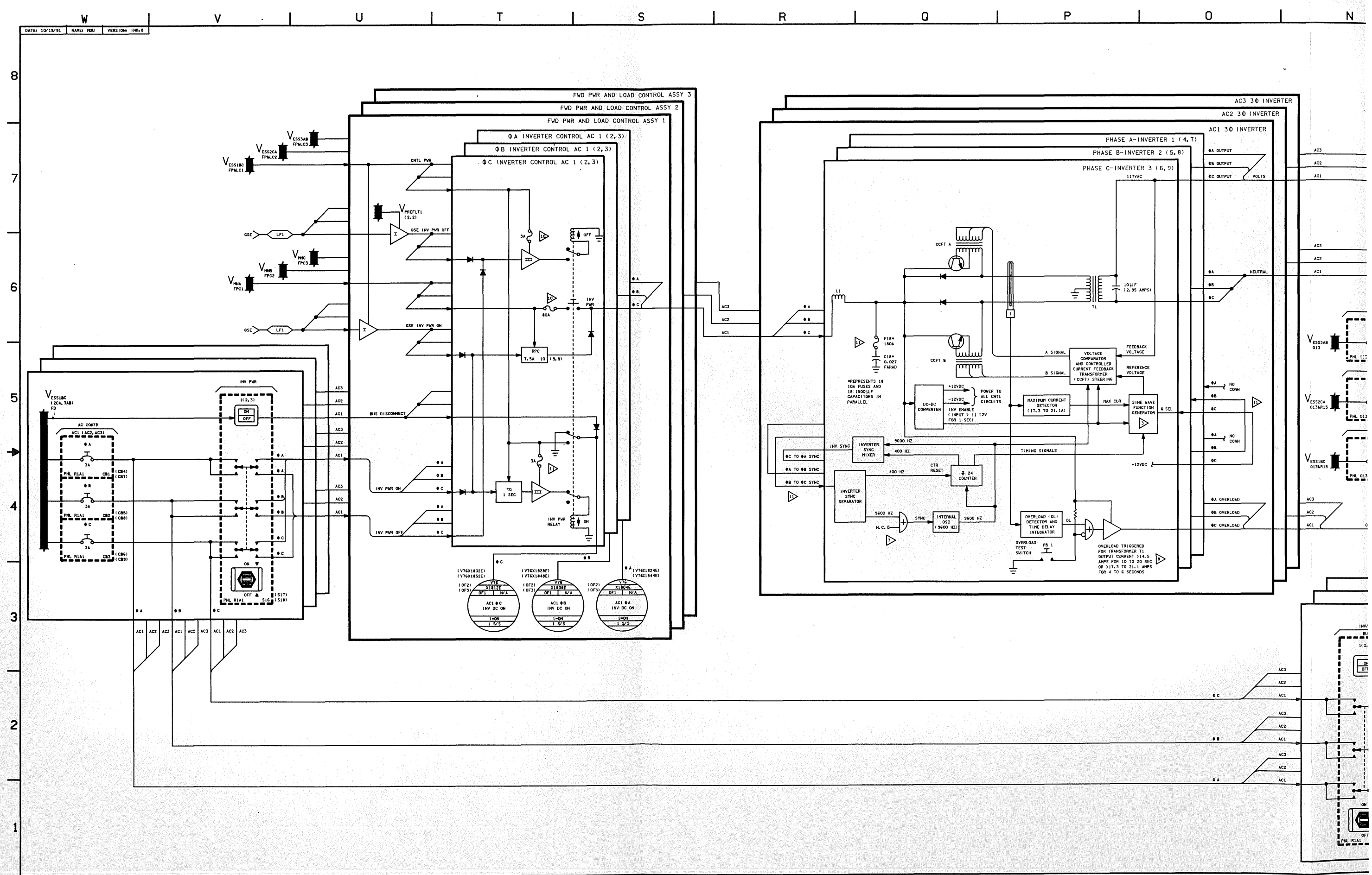

FWD PWR AND LOAD CONTROL ASSY 3
FWD PWR AND LOAD CONTROL ASSY 2
FWD PWR AND LOAD CONTROL ASSY 1
ΦA INVERTER CONTROL AC 1 (2,3)
ΦB INVERTER CONTROL AC 1 (2,3)
ΦC INVERTER CONTROL AC 1 (2,3)
AC3 3Φ INVERTER
AC2 3Φ INVERTER
AC1 3Φ INVERTER
PHASE A-INVERTER 1 (4,7)
PHASE B-INVERTER 2 (5,8)
PHASE C-INVERTER 3 (6,9)
AC CONTR
INV PWR
BUS DISCONNECT
INV PWR ON
INV PWR OFF
INV PWR RELAY
CNTL PWR
GSE INV PWR OFF
GSE INV PWR ON
RPC
TO 1 SEC
INV DC ON
DC-DC CONVERTER
INV ENABLE (INPUT > 11 ±2V FOR 1 SEC)
POWER TO ALL CNTL CIRCUITS
VOLTAGE COMPARATOR AND CONTROLLED CURRENT FEEDBACK TRANSFORMER (CCFT) STEERING
MAXIMUM CURRENT DETECTOR (17.3 TO 21.1A)
SINE WAVE FUNCTION GENERATOR
INVERTER SYNC MIXER
INVERTER SYNC SEPARATOR
INTERNAL OSC (9600 HZ)
24 COUNTER
OVERLOAD (OL) DETECTOR AND TIME DELAY INTEGRATOR
OVERLOAD TEST SWITCH
OVERLOAD TRIGGERED FOR TRANSFORMER T1 OUTPUT CURRENT >14.5 AMPS FOR 10 TO 20 SEC OR >17.3 TO 21.1 AMPS FOR 4 TO 6 SECONDS
TIMING SIGNALS
NEUTRAL
VOLTS

BASIC REV E-1

DATE: 08/30/90	NAME: BJT	VERSION: BPT: 10
DATE: 09/12/90	NAME: BJT	VERSION: INK: 4
DATE: 09/22/90	NAME: LAM	VERSION: INK: 5

AMC1 ▷
(AFT MOTOR CONTROL ASSEMBLY 1)

30 AC MTR PWR

V_{AC1} AMC1

V_{MNA} APC4 — RPC 5A 24

MCA LOGIC MNA — AFT 1 — ON / OFF — PNL MA73C: B S4

V_{MNA} APC4 — RPC 5A 23

AFT POD VLV LOGIC GP 1/3 — ON / OFF — PNL MA73C: I S15

V_{MNA} AMC1

$V_{MNA/B}$ POD/AMC1

V_{AC1} POD/AMC1

RELAY LOGIC POWER ③

5.1K ×4

VENT DOORS
- LEFT 8/9 MOTOR 1 — Z7 — 15.1 SH 3 — K4 OPN A; K3 OPN B; K2 CLS A; K1 CLS B

ET UMBILICAL DOORS
- LEFT DRIVE MOTOR 1 — Y5 — 15.2 SH 2 — K16 CLS; K15 OPN
- LEFT LATCH MOTOR 1 — K7 — 15.2 SH 2 — K20 RLS A; K19 RLS B; K18 LCH A; K17 LCH B
- ℄ LATCH 1 MOTOR 1 — Z7 — 15.2 SH 2 — K8 STW A; K7 STW B; K6 DPLY A; K5 DPLY B
- ℄ LATCH 2 MOTOR 1 — Q7 — 15.2 SH 2 — K11 DPLY B; K10 DPLY A; K13 STW A; K12 STW B

AFT RCS ISOLATION VALVES

MANIFOLD 2
- LEFT FU/OX VALVES (1 EACH) — Q3 — 11.5 SH 2 — K24 OPN; K23 CLS
- RIGHT FU/OX VALVES (1 EACH) — Q3 — 11.5 SH 2 — K22 OPN; K21 CLS

TANK 3/4/5A
- LEFT FU VALVE — C6 — 11.5 SH 1 — K32 OPN; K31 CLS
- LEFT OX VALVE — C3 — 11.5 SH 1 — K30 OPN; K29 CLS
- RIGHT FU VALVE — C6 — 11.5 SH 1 — K27 CLS; K28 OPN
- RIGHT OX VALVE — C3 — 11.5 SH 1 — K25 CLS; K26 OPN

RIGHT RCS XFEED MANIFOLD 3/4/5
- FUEL VALVE — H6 — 11.4 — K36 OPN A; K35 OPN B; K34 CLS A; K33 CLS B
- OXID VALVE — H2 — 11.4 — K38 CLS A; K37 CLS B; K40 OPN A; K39 OPN B

LEFT RCS XFEED MANIFOLD 3/4/5
- FUEL VALVE — N6 — 11.4 — K66 OPN A; K68 OPN B; K72 CLS A; K70 CLS B
- OXID VALVE — N3 — 11.4 — K71 CLS A; K69 CLS B; K67 OPN A; K65 OPN B

LEFT OMS XFEED
- FUEL VALVE A — S5 — 11.4 — K52 OPN B; K51 OPN A; K50 CLS A; K49 CLS B
- OXID VALVE A — S3 — 11.4 — K54 CLS A; K53 CLS B; K56 OPN B; K55 OPN A

OMS ISOLATION VALVES
- LEFT FUEL VALVE A — K6 — 11.3 SH 2 — K44 OPN A; K43 OPN B; K42 CLS A; K41 CLS B
- LEFT OXID VALVE A — K3 — 11.3 SH 2 — K46 CLS A; K45 CLS B; K48 OPN A; K47 OPN B
- RIGHT FUEL VALVE A — K6 — 11.3 SH 2 — K60 OPN A; K59 OPN B; K58 CLS A; K57 CLS B
- RIGHT OXID VALVE A — K3 — 11.3 SH 2 — K62 CLS A; K61 CLS B; K64 OPN A; K63 OPN B

MNA/MNB OMS/RCS RELAY LOGIC POWER ③

AC1 30 OMS/RCS MOTOR VALVE POWER

V76 X2251E OA1 N/A — AFT MCA 1 OPER STATUS 1 — 1=NO OP 10 S/S
V76 X2252E OA1 N/A — AFT MCA 1 OPER STATUS 2 — 1=NO OP 10 S/S
V76 X2253E OA1 N/A — AFT MCA 1 OPER STATUS 3 — 1=NO OP 10 S/S
V76 X2254E OA1 N/A — AFT MCA 1 OPER STATUS 4 — 1=NO OP 10 S/S

AMC2 ▷
(AFT MOTOR CONTROL ASSEMBLY 2)

V_{AC2} AMC2 30 AC MTR PWR

MCA LOGIC MNB — AFT 2 — ON / OFF — PNL MA73C: B S10

V_{MNB} APC5 — RPC 5A 24

AFT POD VLV LOGIC GP 1/2 — ON / OFF — PNL MA73C: I S16

V_{MNB} APC5 — RPC 5A 23

V_{MNB} AMC2

$V_{MNB/C}$ POD/AMC2

V_{AC2} POD/AMC2

RELAY LOGIC POWER ③

5.1K ×4

VENT DOORS
- LEFT 8/9 MOTOR 2 — Z7 — 15.1 SH 3 — K7 CLS A; K8 CLS B
- RIGHT 8/9 MOTOR 2 — Z7 — 15.1 SH 3 — K1 OPN A; K2 OPN B

ET UMBILICAL DOORS
- LEFT LATCH MOTOR 2 — Z2 — 15.2 SH 2 — K58 RLS A; K59 LCH B
- ℄ LATCH 1 MOTOR 2 — Z2 — 15.2 SH 2 — K17 DPLY A; K18 DPLY B
- RIGHT DRIVE MOTOR 2 — Q1 — 15.2 SH 2 — K10 OPN
- RIGHT LATCH MOTOR 2 — Q2 — 15.2 SH 2 — K13 LCH A; K14 LCH B; K11 RLS A; K12 RLS B; K9 CLS

AFT RCS ISOLATION VALVES

MANIFOLD 1
- LEFT FU/OX VALVES (1 EACH) — V3 — 11.5 SH 2 — K22 OPN; K21 CLS
- RIGHT FU/OX VALVES (1 EACH) — V3 — 11.5 SH 2 — K20 OPN; K19 CLS

TANK 3/4/5B
- LEFT FU VALVE — C6 — 11.5 SH 1 — K29 OPN; K27 CLS
- LEFT OX VALVE — C3 — 11.5 SH 1 — K31 CLS; K30 OPN
- RIGHT FU VALVE — C6 — 11.5 SH 1 — K24 OPN; K23 CLS
- RIGHT OX VALVE — C3 — 11.5 SH 1 — K25 CLS; K26 OPN

OMS CROSS FEED VALVES
- LEFT FUEL VALVE B — S5 — 11.4 — K43 OPN A; K40 OPN B; K42 CLS A; K41 CLS B
- LEFT OXID VALVE B — S3 — 11.4 — K47 CLS A; K46 CLS B; K44 OPN A; K45 OPN B
- RIGHT FUEL VALVE B — Q6 — 11.4 — K51 OPN A; K50 CLS A; K52 OPN B; K53 CLS B
- RIGHT OXID VALVE B — Q3 — 11.4 — K55 CLS A; K54 CLS B; K48 OPN A; K49 OPN B

MNB/MNC OMS/RCS RELAY LOGIC POWER ③

AC2 30 OMS/RCS MOTOR VALVE POWER

V76 X2261E OA2 N/A — AFT MCA 2 OPER STATUS 1 — 1=NO OP 10 S/S
V76 X2262E OA2 N/A — AFT MCA 2 OPER STATUS 2 — 1=NO OP 10 S/S
V76 X2263E OA2 N/A — AFT MCA 2 OPER STATUS 3 — 1=NO OP 10 S/S
V76 X2264E OA2 N/A — AFT MCA 2 OPER STATUS 4 — 1=NO OP 10 S/S

AMC3 ▷
(AFT MOTOR CONTROL ASSEMBLY 3)

AC3 30 OMS/RCS MOTOR VALVE POWER

V_{AC3} POD/AMC3

V_{MNC} APC6 — RPC 5A 23

AFT POD VLV LOGIC GP 2/3 — ON / OFF — PNL MA73C: I S17

V_{MNC} APC6 — RPC 5A 24

MCA LOGIC MNC — AFT 3 — ON / OFF — PNL MA73C: B S14

V_{MNC} AMC3

$V_{MNC/A}$ POD/AMC3

V_{AC3} AMC3

30 AC MTR PWR

MNC/MNA OMS/RCS RELAY LOGIC POWER ③

RELAY LOGIC POWER ③

5.1K ×4

VENT DOORS
- RIGHT 8/9 MOTOR 1 — Z7 — 15.1 SH 3 — K3 OPN A; K4 OPN B; K1 CLS A; K2 CLS B

ET UMBILICAL DOORS
- LEFT DRIVE MOTOR 2 — Y1 — 15.2 SH 2 — K10 CLS; K9 OPN
- ℄ LATCH 2 MOTOR 2 — Q1 — 15.2 SH 2 — K5 DPLY A; K6 DPLY B; K7 STW A; K8 STW B
- RIGHT DRIVE MOTOR 1 — Q5 — 15.2 SH 2 — K16 CLS; K17 OPN
- RIGHT LATCH MOTOR 1 — Q7 — 15.2 SH 2 — K14 RLS A; K15 RLS B; K12 LCH A; K13 LCH B

AFT RCS ISOLATION VALVES

TANK 1/2
- LEFT FU VALVE — C7 — 11.5 SH 1 — K29 OPN A; K27 OPN B; K28 CLS A; K26 CLS B
- LEFT OX VALVE — C2 — 11.5 SH 1 — K32 CLS A; K33 CLS B; K30 OPN A; K31 OPN B
- RIGHT FU VALVE — C7 — 11.5 SH 1 — K37 OPN A; K35 OPN B; K36 CLS A; K34 CLS B
- RIGHT OX VALVE — C2 — 11.5 SH 1 — K41 CLS B; K40 CLS A; K38 OPN A; K39 OPN B

MANIFOLD 3
- LEFT FU/OX VALVES (1 EACH) — H3 — 11.5 SH 2 — K18 OPN; K19 CLS
- RIGHT FU/OX VALVES (1 EACH) — H3 — 11.5 SH 2 — K20 OPN; K21 CLS

MANIFOLD 4
- LEFT FU/OX VALVES (1 EACH) — H3 — 11.5 SH 2 — K23 CLS; K22 OPN
- RIGHT FU/OX VALVES (1 EACH) — H3 — 11.5 SH 2 — K25 CLS; K24 OPN

RCS XFEED MANIFOLD 1/2
- LEFT FUEL VALVE — N5 — 11.4 — K49 CLS B; K48 CLS A; K46 OPN A; K47 OPN B
- LEFT OXID VALVE — N3 — 11.4 — K45 OPN A; K43 OPN B; K44 CLS A; K42 CLS B
- RIGHT FUEL VALVE — N6 — 11.4 — K57 CLS B; K56 CLS A; K54 OPN A; K55 OPN B
- RIGHT OXID VALVE — N2 — 11.4 — K53 OPN A; K51 OPN B; K52 CLS A; K50 CLS B

RIGHT OMS XFEED
- FUEL VALVE A — Q6 — 11.4 — K77 OPN A; K76 OPN B; K74 CLS A; K75 CLS B
- OXID VALVE A — Q3 — 11.4 — 102-CL 99-OPN — K81 CLS B; K80 CLS A; K78 OPN A; K79 OPN B

OMS ISOLATION VALVES
- LEFT FUEL VALVE B — K6 — 11.3 SH 2 — K66 OPN A; K67 OPN B; K68 CLS A; K69 CLS B
- LEFT OXID VALVE B — K3 — 11.3 SH 2 — K73 CLS A; K72 CLS B; K70 OPN A; K71 OPN B
- RIGHT FUEL VALVE B — K6 — 11.3 SH 2 — K61 OPN A; K59 OPN B; K60 CLS A; K58 CLS B
- RIGHT OXID VALVE B — K3 — 11.3 SH 2 — K65 CLS A; K64 CLS B; K62 OPN A; K63 OPN B

V76 X2271E OA3 N/A — AFT MCA 3 OPER STATUS 1 — 1=NO OP 10 S/S
V76 X2272E OA3 N/A — AFT MCA 3 OPER STATUS 2 — 1=NO OP 10 S/S
V76 X2273E OA3 N/A — AFT MCA 3 OPER STATUS 3 — 1=NO OP 10 S/S
V76 X2274E OA3 N/A — AFT MCA 3 OPER STATUS 4 — 1=NO OP 10 S/S

7. SEE TABLE 2-I FOR VENDOR DRAWING REFERENCES

⑥ SPARE CIRCUITRY

5. EXCEPT FOR PAYLOAD RETENTION LATCH MOTORS (SHEET 2), WHEN "A" AND "B" RELAYS ARE INDICATED FOR A PARTICULAR MOTOR POWER CIRCUIT (I.E. CLS A AND CLS B, OPN A AND OPN B——STW A AND STW B), THEN BOTH THE "A" AND "B" RELAYS MUST BE OPERATED FOR AC POWER TRANSFER TO THE MOTOR. NORMALLY, POSITION FEEDBACK SIGNALS WILL AUTOMATICALLY DE-ENERGIZE THE RELAYS AND REMOVE AC POWER FROM THE MOTORS WHEN DESIRED POSITION IS REACHED

④ RELAY WIRING SEQUENCE FOR RELAYS CONNECTED IN SERIES TO AN MCA OPER STATUS TELEMETRY EVENT HAS BEEN CHANGED TO SIMPLIFY DRAWING. PROPER SEQUENCE IS INDICATED BY NUMBER NEAR RELAY POLE. RELAY WIRING SEQUENCE NUMBERS IN PARENTHESIS FOR OV-102 ONLY

③ RELAY LOGIC POWER IS USED TO OPERATE RELAYS COMMANDED VIA MDM SIGNAL AND MAY BE USED WHEN COMMANDING RELAYS VIA MANUAL SWITCHES. RELAY LOGIC POWER IS ALSO USED TO POWER POSITION FEEDBACK SIGNALS THAT DE-ENERGIZE RELAYS, DRIVE TALKBACKS AND TELEMETRY WHEN DESIRED POSITION IS REACHED

2. MOTOR CONTROL ASSEMBLIES (MCA) CONTAIN RELAY LOGIC WHEREBY 3 PHASE AC MOTOR POWER IS APPLIED AS ABC OR ACB PHASE SEQUENCE FOR MOTOR ROTATION DIRECTION CONTROL. AC MOTOR POWER IS REMOVED (RELAYS DE-ENERGIZED) WHEN DESIRED POSITION IS REACHED

NOTES: 1. EACH RELAY POLE IN A SERIES CONNECTION TO AN MCA OPER STATUS TELEMETRY EVENT IS THE FOURTH POLE ON THE INDICATED MOTOR CONTROL RELAY. SEE REFERENCED DRAWING FOR THE REST OF RELAY CIRCUIT

*4 FMC & AMC1

SIGNATURE	DATE	NATIONAL AERONAUTICS AND SPACE ADMINISTRATION LYNDON B. JOHNSON SPACE CENTER HOUSTON, TEXAS
DSGN V. ORTIZ	8/23/78	
DR Doug Snell	9/13/78	
ENGR C. L. GUDERIAN		MCA DISTRIBUTION
ENGR Carl Gudelian	9/14/78	
APP Paul M. Pierce		
APP		SPACE SHUTTLE / ALL — DWG NO 2.4
OMNIPLAN S. E. Hulse	10-18-90	
LTR E PCN		104.5 X 34 — PAGE — SHEET 1 OF 3

BASIC REV E

FMC1 (FORWARD MOTOR CONTROL ASSEMBLY 1)

FMC2 (FWD MOTOR CONTROL ASSEMBLY 2)

FMC3 (FWD MOTOR CONTROL ASSEMBLY 3)

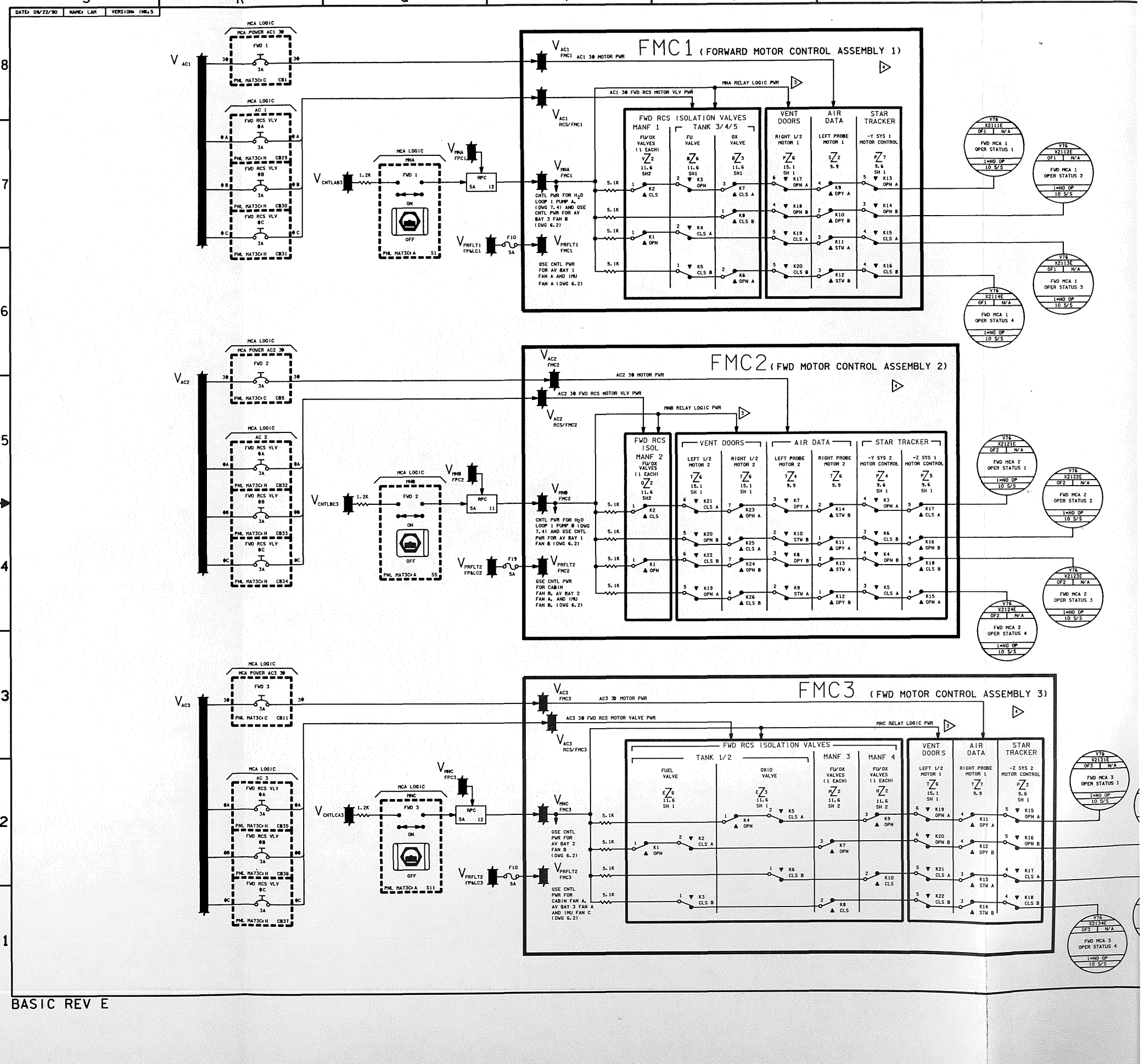

S
R
Q
P
O
N
M
8
7
6
5
4
3
2
1
FMC1 (FORWARD MOTOR CONTROL ASSEMBLY 1)
FMC2 (FWD MOTOR CONTROL ASSEMBLY 2)
FMC3 (FWD MOTOR CONTROL ASSEMBLY 3)
FWD RCS ISOLATION VALVES
VENT DOORS
AIR DATA
STAR TRACKER

BASIC REV E

DATE: 01/30/96	NAME: SVJ	VERSION: BPT:14
DATE: 02/12/96	NAME: LAM	VERSION: BPT:15
DATE: 02/16/96	NAME: JMB	VERSION: INR:7

VENT DOOR — LEFT NO 5 MOTOR 2 — G Z 7, 15.1 SHT 2 — K70 OPN B, K82 CLS B, K68 OPN A, K72 CLS A

VENT DOORS — RIGHT NO 3 MOTOR 1 — R Z 6, 15.1 SHT 2 — K1 CLS A, K15 CLS B, K5 OPN A, K3 OPN B, K7 CLS A, K21 CLS B, K11 OPN A, K9 OPN B

VENT DOORS — RIGHT NO 5 MOTOR 1 — C Z 6, 15.1 SHT 2 — K6 OPN A, K16 OPN B, K2 CLS A, K4 CLS B

VENT DOORS — RIGHT NO 6 MOTOR 1 — N Z 6, 15.1 SHT 3

PAYLOAD BAY DOORS — STBD POU MOTOR 1 — J Z 6, 14.2 SH1 — K42 CLS, K54 OPN

PAYLOAD BAY DOORS — PORT FWD BKHD LATCH MOTOR 1 — F Z 7, 14.2 SH1 — K79 REL, K67 LCH

PAYLOAD BAY DOORS — STBD FWD BKHD LATCH MOTOR 1 — N Z 7, 14.2 SH1 — K23 LCH, K35 REL

PAYLOAD BAY DOORS — ℄ LATCH 9-12 MOTOR 1 — R Z 3, 14.2 SH1 — K20 LCH, K32 REL

FREON RADIATOR — PORT SYS A DEPLOY MOTOR 1 — G Z 6, 14.1 SHT 3 — K8 STW, K12 DPY, K22 DPY, K10 STW

FREON RADIATOR — PORT SYS A LATCH 1-6 MOTOR 1 — P Z 5, 14.1 SHT 3 — K18 LCH, K30 REL

FREON RADIATOR — PORT SYS A LATCH 7-12 MOTOR 1 — P Z 3, 14.1 SHT 3 — K14 LCH, K26 REL

REMOTE MANIPULATOR — PORT MID RETN LATCH MOTOR 1 — L Z 7, 14.6 SHT 1 — K55 LCH, K43 REL

REMOTE MANIPULATOR — STBD FWD RETN LATCH MOTOR 2 — K44 REL, K56 LCH

PAYLOAD RETENTION — PL SELECT POS 1 SYS 1 LATCH MOTORS — K46, K34, K47, K59, K29, K17, K39, K27, K52, K64, K13, K48, K60, K25, K50, K38, K37, K49, K63, K51

PAYLOAD RETENTION — PL SELECT POS 2 SYS 1 LATCH MOTORS — K24, K36, K62, K74, K53, K41, K61, K73, K77, K65

PAYLOAD RETENTION — PL SELECT POS 3 SYS 1 LATCH MOTORS

MNA RELAY LOGIC POWER

AC1 30 MOTOR POWER — V_{AC1PBD} MMC1 — K66, K78

AC1 30 MOTOR POWER — 5.1K — K80 — V76 X2161E AC1PBM/PBD MMC1 BUS ENABL 1 (1=DISABLE, 1 S/S)

V_{AC1PBM} MMC1 — K64 — V76 X2162E AC1PBM/PBD MMC1 BUS ENABL 2 (1=DISABLE, 1 S/S)

PWR / RTN 1A — 11 0Z5, 14 0Z4

PWR / RTN 2A — 12 0Z5, 15 0Z4

PWR / RTN 3A — 13 0Z5, 16 0Z4

(MID MOTOR CONTROL ASSEMBLY 1) MMC1

7Z6 2.4 SHT 3 — 5 CNTLAB1/CA1 — CNTLAB2/CA2 6 — 7Z6 2.4 SHT 3

PBM POWER ON SYS 1 TO MMC1 (AC1)

V76 X2184E OA1 N/A — AC2PBM MMC3 BUS ENABL 2 (1=DISABLE, 1 S/S)

V76 X2183E OA1 N/A — AC2PBM MMC3 BUS ENABL 1 (1=DISABLE, 1 S/S)

V76 X2182E OA1 N/A — AC1PBM/PBD MMC3 BUS ENABL 2 (1=DISABLE, 1 S/S)

V76 X2181E OA1 N/A — AC1PBM/PBD MMC3 BUS ENABL 1 (1=DISABLE, 1 S/S)

V_{AC2} MMC3 — V_{AC2PBM} MMC3 — AC2 30 MOTOR POWER

V_{PMB} MMC3 — 5.1K — V_{AC1PBM} MMC3 — AC1 30 MOTOR POWER

PWR / RTN 1B — 17 0Z3, 20 0Z2

PWR / RTN 2B — 18 0Z3, 21 0Z2

PWR / RTN 3B — 19 0Z3, 22 0Z2

(MID MOTOR CONTROL ASSEMBLY 3) MMC3

VENT DOORS — LEFT NO 4/7 MOTOR 1 — I Z 6, 15.1 SHT 2 — K4 CLS B, K18 CLS A, K2 OPN B, K6 OPN A

VENT DOORS — LEFT NO 5 MOTOR 1 — C Z 6, 15.1 SHT 2 — K40 OPN B, K30 OPN A, K26 CLS B, K28 CLS A

VENT DOORS — LEFT NO 6 MOTOR 1 — N Z 6, 15.1 SHT 3 — K52 CLS B, K66 CLS A, K54 OPN B, K42 OPN A

PAYLOAD BAY DOORS — PORT AFT BKHD LATCH MOTOR 1 — F Z 3, 14.2 SHI — K3 REL, K1 CLS

PAYLOAD BAY DOORS — ℄ LATCH 1-4 MOTOR 1 — O Z 7, 14.2 SHI — K64 REL, K62 CLS

PAYLOAD BAY DOORS — ℄ LATCH 5-8 MOTOR 1 — R Z 7, 14.2 SHI — K15 REL, K13 CLS

FREON RADIATOR — STBD SYS B DEPLOY MOTOR 1 — G Z 6, 14.1 SHT 3 — K39 STW, K41 DPY, K27 STW, K29 DPY

FREON RADIATOR — STBD SYS A LATCH 1-6 MOTOR 1 — P Z 5, 14.1 SHT 3 — K38 LCH, K50 REL

REMOTE MANIPULATOR — STBD SYS A LATCH 7-12 MOTOR 1 — P Z 3, 14.1 SHT 3 — K12 LCH, K24 REL

REMOTE MANIPULATOR — PORT AFT RETN LATCH MOTOR 2 — N Z 4, 14.6 SHT 1 — K78 LCH, K76 REL

REMOTE MANIPULATOR — STBD AFT RETN LATCH MOTOR 1 — K25 REL, K37 LCH

PAYLOAD RETENTION — PL SELECT POS 1 SYS 2 LATCH MOTORS — K47, K68, K79, K35, K81, K17, K5, K34, K56, K55, K33, K67, K69, K57, K36, K31, K48, K32, K44, K46, K43

PAYLOAD RETENTION — PL SELECT POS 2 SYS 2 LATCH MOTORS — K21, K45, K73, K80, K75, K19

PAYLOAD RETENTION — PL SELECT POS 3 SYS 2 LATCH MOTORS — K82

V76 X2184E OA1 N/A — AC2PBM MMC3 BUS ENABL 2 (1=DISABLE, 1 S/S)

V76 X2238E OF2 N/A — MID MCA 3 OPER STATUS 8 (1=NO OP, 10 S/S)

V76 X2237E OF2 N/A — MID MCA 3 OPER STATUS 7 (1=NO OP, 10 S/S)

V76 X2236E OF2 N/A — MID MCA 3 OPER STATUS 6 (1=NO OP, 10 S/S)

V76 X2235E OF2 N/A — MID MCA 3 OPER STATUS 5 (1=NO OP, 10 S/S)

V76 X2234E OF1 N/A — MID MCA 3 OPER STATUS 4 (1=NO OP, 10 S/S)

V76 X2233E OF1 N/A — MID MCA 3 OPER STATUS 3 (1=NO OP, 10 S/S)

V76 X2232E OF1 N/A — MID MCA 3 OPER STATUS 2 (1=NO OP, 10 S/S)

V76 X2231E OF1 N/A — MID MCA 3 OPER STATUS 1 (1=NO OP, 10 S/S)

V76 X2218E OF2 N/A — MID MCA 1 OPER STATUS 8 (1=NO OP, 10 S/S)

V76 X2217E OF2 N/A — MID MCA 1 OPER STATUS 7 (1=NO OP, 10 S/S)

V76 X2216E OF2 N/A — MID MCA 1 OPER STATUS 6 (1=NO OP, 10 S/S)

V76 X2215E OF2 N/A — MID MCA 1 OPER STATUS 5 (1=NO OP, 10 S/S)

V76 X2214E OF1 N/A — MID MCA 1 OPER STATUS 4 (1=NO OP, 10 S/S)

V76 X2213E OF1 N/A — MID MCA 1 OPER STATUS 3 (1=NO OP, 10 S/S)

V76 X2212E OF1 N/A — MID MCA 1 OPER STATUS 2 (1=NO OP, 10 S/S)

V76 X2211E OF1 N/A — MID MCA 1 OPER STATUS 1 (1=NO OP, 10 S/S)

▷ VENT DOORS 4 AND 7 MOTORS AND MECHANICAL EQUIPMENT HAVE BEEN REMOVED. RELAYS AND RELAY LOGIC, INCLUDING SWITCHING, COMMANDING, AND POSITION FEEDBACK, ARE STILL OPERATIONAL

▷ ONLY ON FLIGHTS USING STARBOARD RMS

7. SEE TABLE 2-I FOR VENDOR DRAWING REFERENCES

▷ THERE ARE 5 LATCH AND RELEASE RELAYS PER PAYLOAD SELECT POSITIONS 1, 2, OR 3. THESE RELAYS ARE OPERATED BY TOGGLE SWITCHES WHICH ARE ENABLED AFTER THE FOLLOWING STEPS:
1) SYSTEM 1 OR, SYSTEM 2 PAYLOAD LOGIC POWER "ON" (REDUNDANT MOTOR DRIVE LOGIC PWR)
2) PAYLOAD BAY MECH POWER (SYS 1 OR SYS 2) ENABLED
3) PAYLOAD SELECT POSITION 1, 2, OR 3 (PANEL A6A1)

5. EXCEPT FOR PAYLOAD RETENTION LATCH MOTORS, WHEN "A" AND "B" RELAYS ARE INDICATED FOR A PARTICULAR MOTOR POWER CIRCUIT (I.E. CLS A AND CLS B, OPN A AND OPN B, STW A AND STW B), BOTH THE "A" AND "B" RELAYS MUST BE OPERATED FOR AC POWER TRANSFER TO THE MOTOR. NORMALLY, POSITION FEEDBACK SIGNALS WILL AUTOMATICALLY DE-ENERGIZE THE RELAYS AND REMOVE

4. RELAY WIRING SEQUENCE FOR RELAYS CONNECTED IN SERIES TO AN MCA OPER STATUS TELEMETRY EVENT HAS BEEN CHANGED TO SIMPLIFY THE DRAWING. PROPER SEQUENCE IS INDICATED BY NUMBERS NEAR RELAY POLE. RELAY WIRING SEQUENCE NUMBERS IN PARENTHESIS FOR OV102 ONLY

3. RELAY LOGIC POWER IS USED TO OPERATE RELAYS COMMANDED VIA MDM SIGNALS AND MAY BE USED WHEN COMMANDING RELAYS VIA MANUAL SWITCHES. RELAYS LOGIC POWER IS ALSO USED TO POWER POSITION FEEDBACKS. SIGNALS THAT DE-ENERGIZE RELAYS, DRIVE TALKBACKS AND TELEMETRY WHEN DESIRED POSITION IS REACHED

2. MOTOR CONTROL ASSEMBLYS (MCA'S) CONTAIN RELAY LOGIC WHEREBY 3 PHASE AC MOTOR POWER IS APPLIED AS ABC OR ACB PHASE SEQUENCE FOR MOTOR ROTATION DIRECTION CONTROL. AC MOTOR POWER IS REMOVED (RELAY DE-ENERGIZED) WHEN DESIRED POSITION IS REACHED

NOTES: ▷ EACH RELAY POLE IN A SERIES CONNECTION TO AN MCA OPER STATUS EVENT IS A FOURTH POLE ON THE INDICATED MOTOR CONTROL RELAY. SEE REFERENCE DRAWING FOR REST OF RELAY CIRCUIT. SEE ALSO 4-POLE RELAY DIAGRAM NOTE 1 DWG 2.4-3

4 MMC1/3 2

SIGNATURE	DATE	NATIONAL AERONAUTICS AND SPACE ADMINISTRATION LYNDON B. JOHNSON SPACE CENTER HOUSTON, TEXAS
DSGN VIC ORTIZ		
DR SANDY KIMBRELL		
ENGR C.B. GUDERIAN		MCA DISTRIBUTION
ENGR		
APP	2/16/96	
APP		SPACE SHUTTLE — DWG NO 2.4
CADS S.K. Kimbrell II	6-17-96	ALL
LTR E PCN 6		93.5 X 34 — PAGE — SHEET 2 OF 3

BASIC REV E-6

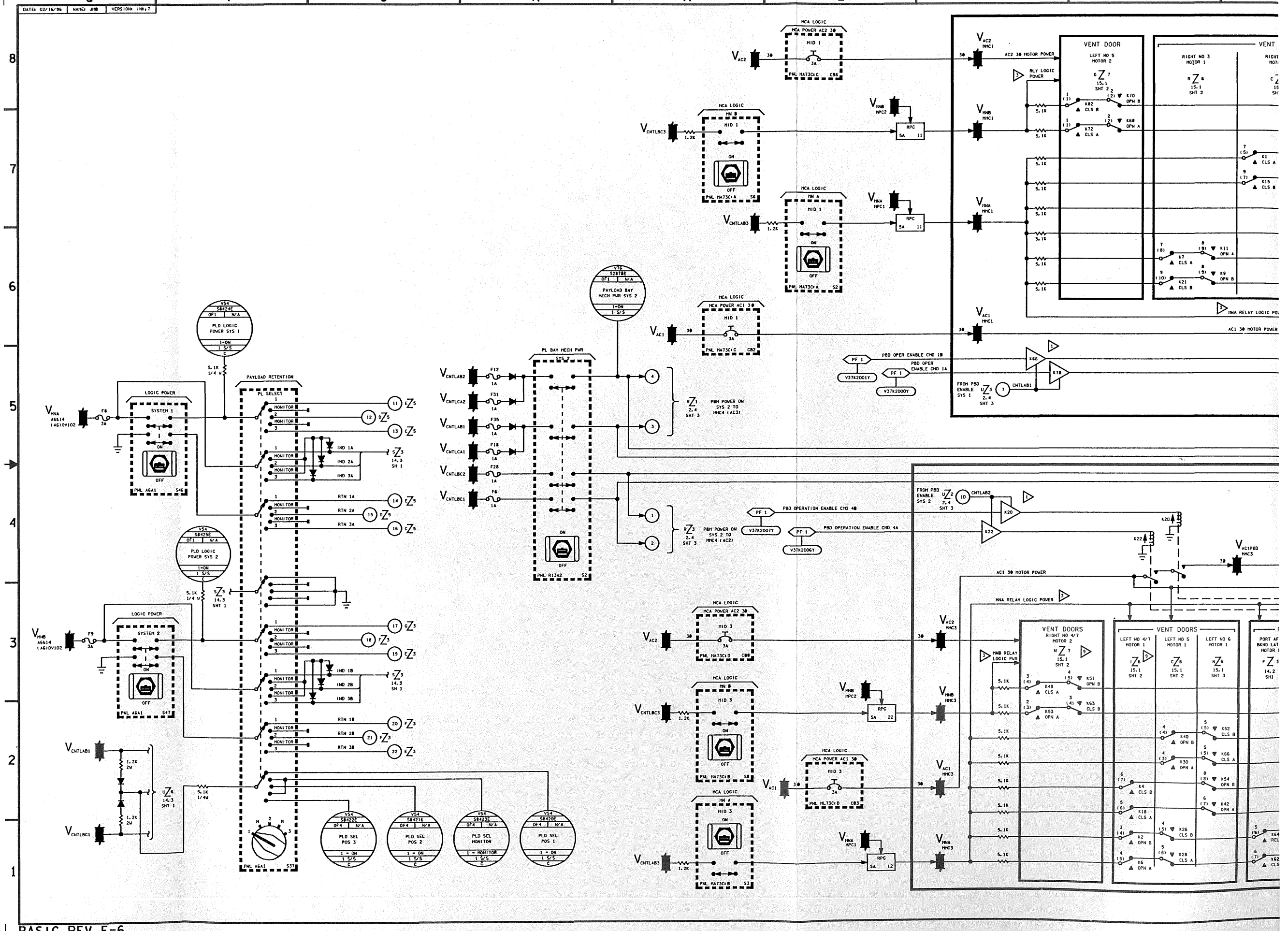

DATE: 02/16/96
NAME: JMB
VERSION: INK:7
VENT DOOR
LEFT NO 5 MOTOR 2
RIGHT NO 3 MOTOR 1
VENT DOORS
RIGHT NO 4/7 MOTOR 2
LEFT NO 4/7 MOTOR 1
LEFT NO 5 MOTOR 1
LEFT NO 6 MOTOR 1
PAYLOAD RETENTION
PL SELECT
LOGIC POWER
SYSTEM 1
SYSTEM 2
PLD LOGIC POWER SYS 1
PLD LOGIC POWER SYS 2
PAYLOAD BAY HECH PWR SYS 2
PL BAY HECH PWR SYS 2
PLD SEL POS 3
PLD SEL POS 2
PLD SEL MONITOR
PLD SEL POS 1
HCA LOGIC
MCA POWER AC2 30
MCA POWER AC1 30
AC2 30 MOTOR POWER
AC1 30 MOTOR POWER
MNA RELAY LOGIC POWER
MNB RELAY LOGIC PWR
PBD OPER ENABLE CMD 1B
PBD OPER ENABLE CMD 1A
PBD OPERATION ENABLE CMD 4B
PBD OPERATION ENABLE CMD 4A
PBM POWER ON SYS 2 TO MMC4 (AC3)
PBM POWER ON SYS 2 TO MMC4 (AC2)
FROM PBD ENABLE SYS 1
FROM PBD ENABLE SYS 2

BASIC REV E-6

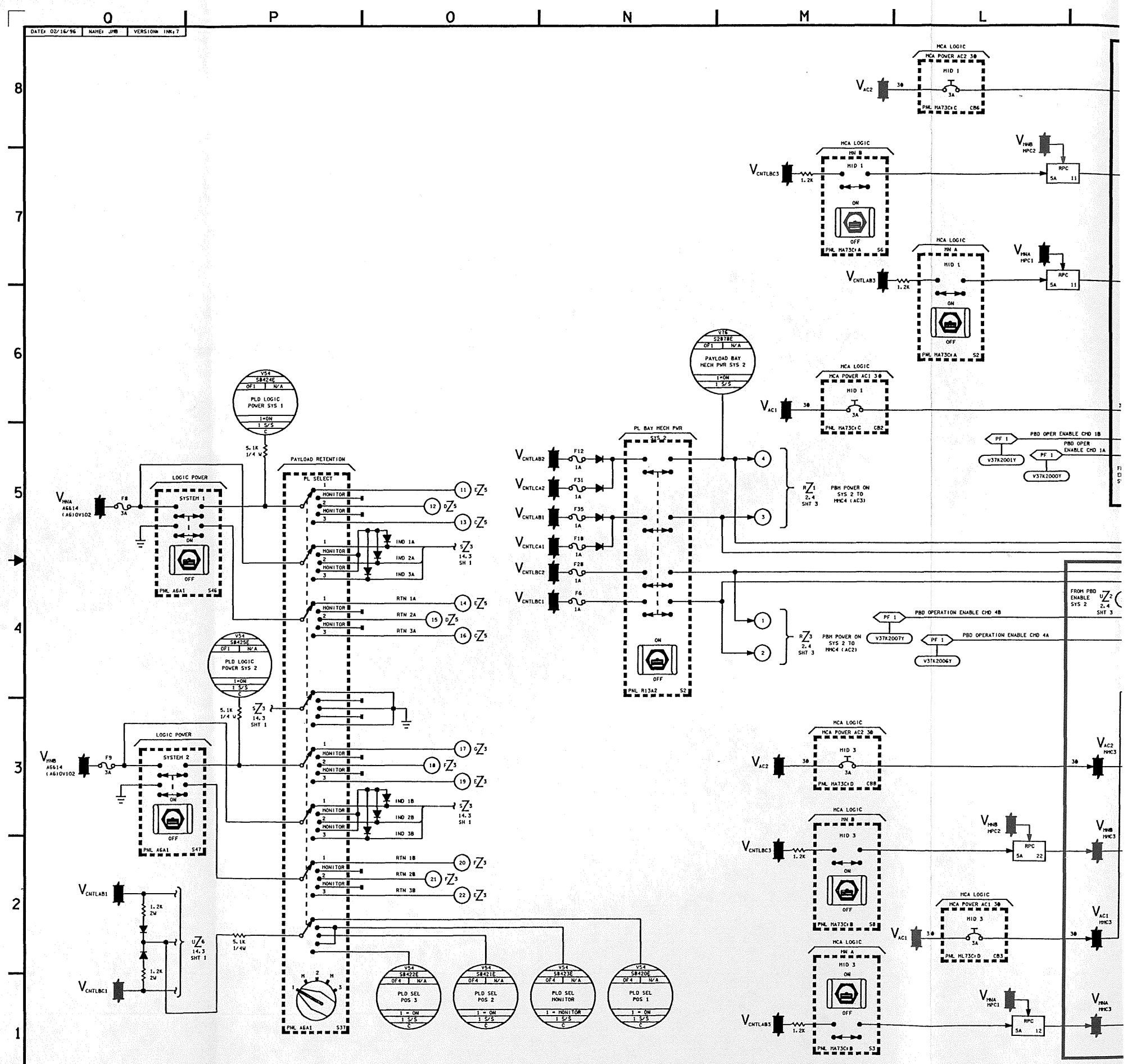
DATE: 02/16/96
NAME: JMB
VERSION: INK 7
PLD LOGIC POWER SYS 1
PLD LOGIC POWER SYS 2
LOGIC POWER
SYSTEM 1
SYSTEM 2
PAYLOAD RETENTION
PL SELECT
PL BAY MECH PWR
PAYLOAD BAY MECH PWR SYS 2
MCA LOGIC
MCA POWER AC2 3Ø
MCA POWER AC1 3Ø
MN B
MN A
PBD OPER ENABLE CMD 1B
PBD OPER ENABLE CMD 1A
PBD OPERATION ENABLE CMD 4B
PBD OPERATION ENABLE CMD 4A
PBH POWER ON SYS 2 TO MMC4 (AC3)
PBM POWER ON SYS 2 TO MMC4 (AC2)
FROM PBD ENABLE SYS 2
PL BAY MECH PWR SYS 2
IND 1A
IND 2A
IND 3A
IND 1B
IND 2B
IND 3B
RTN 1A
RTN 2A
RTN 3A
RTN 1B
RTN 2B
RTN 3B
PML AG A1 S46
PML AG A1 S47
PML AG A1 S37
PML HA73C A S6
PML HA73C A S7
PML HA73C C CB6
PML HA73C C CB2
PML HA73C D CB8
PML HA73C D CB3
PML HA73C B S8
PML HA73C B S9
PML RL3A2 S2
RPC 5A 11
RPC 5A 22
RPC 5A 12
OFF
ON

BASIC REV E-6

DATE: 09/22/90	NAME: VSH	VERSION: INK=17
DATE: 01/29/96	NAME: JMB	VERSION: BPT=3
DATE: 02/16/96	NAME: JMB	VERSION: INK=18

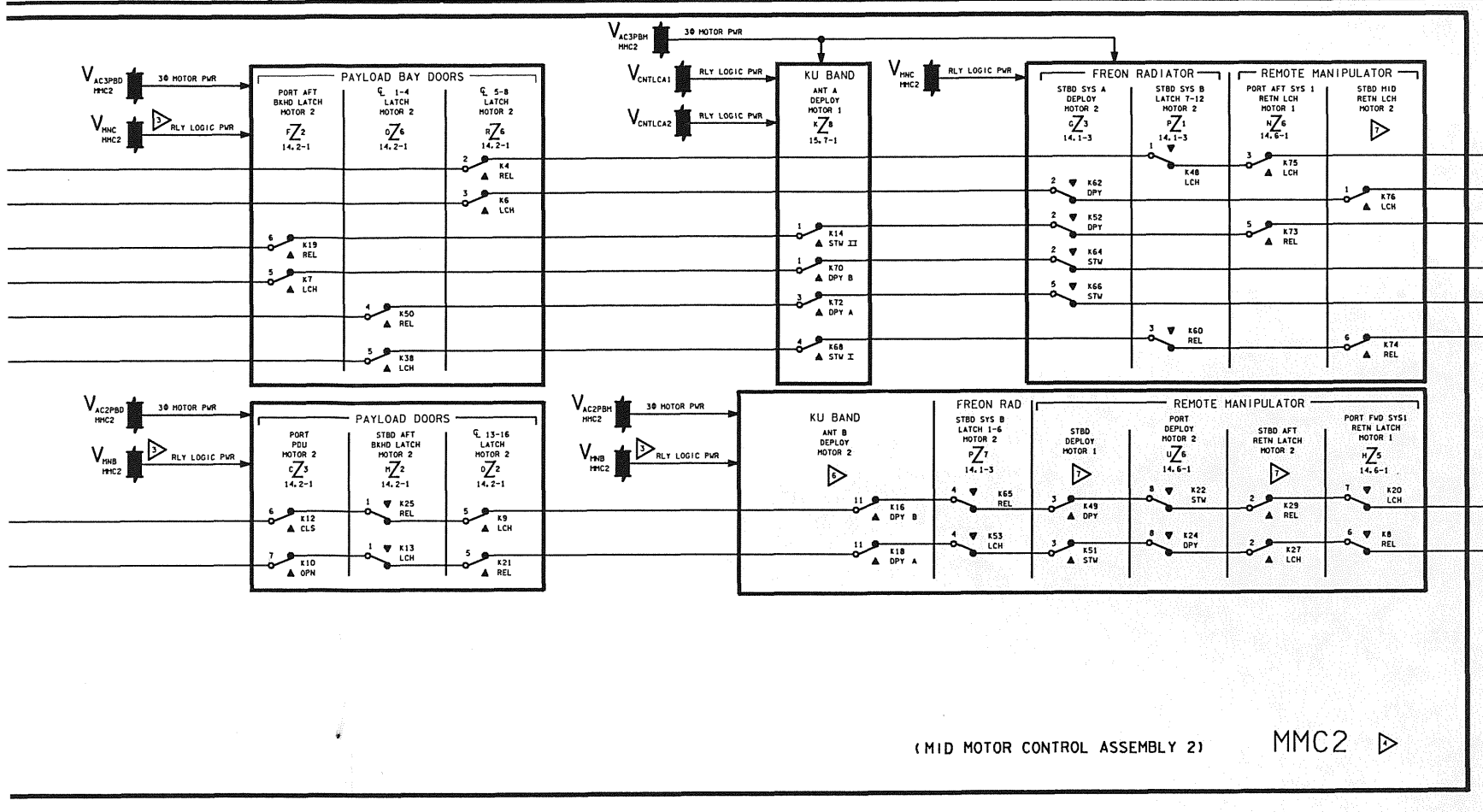

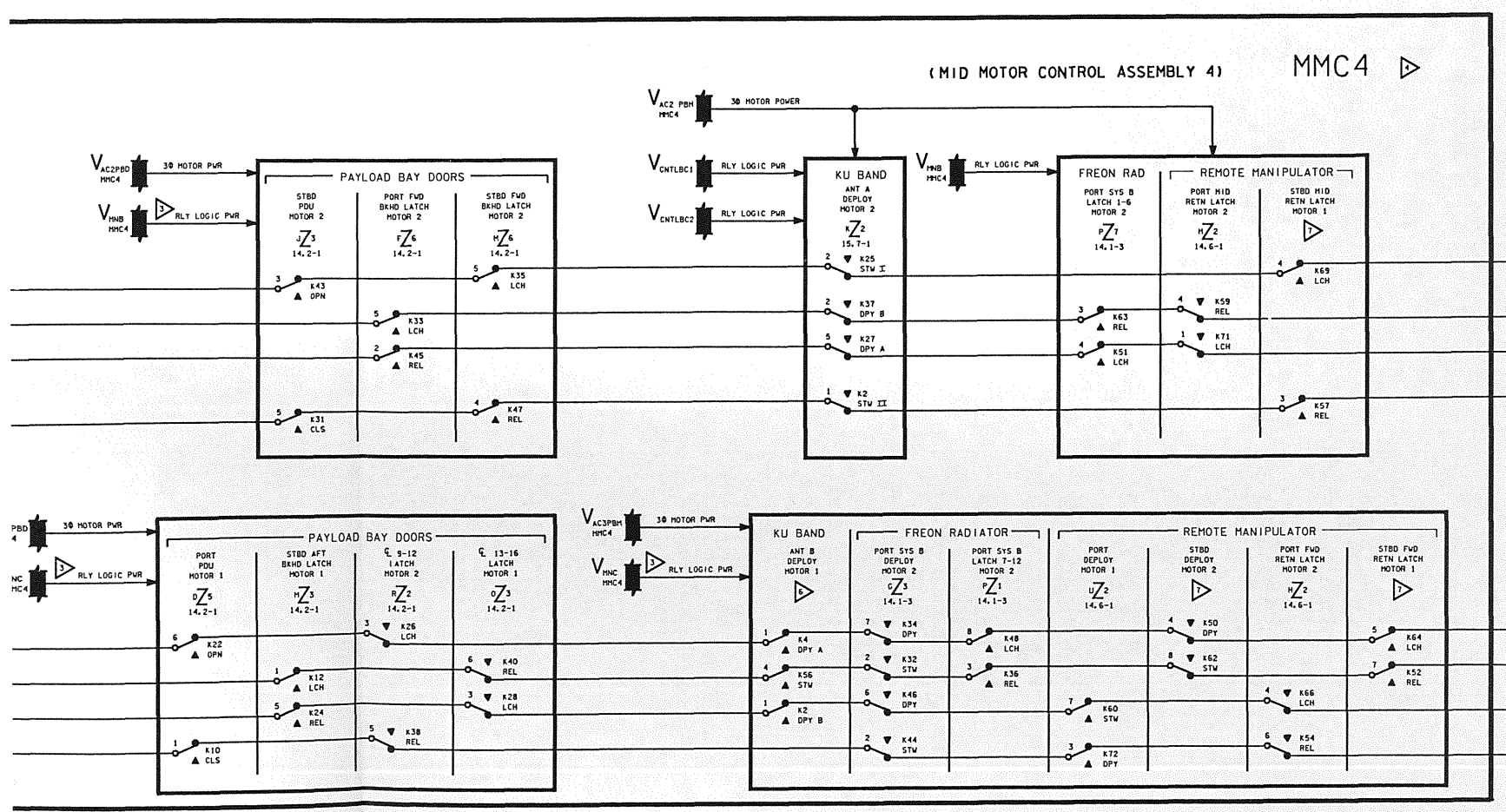

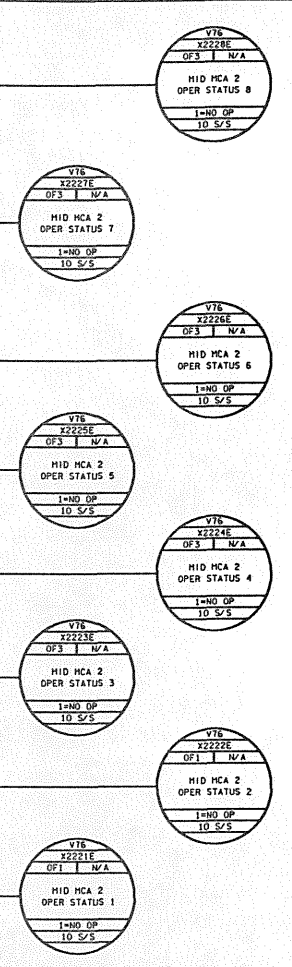

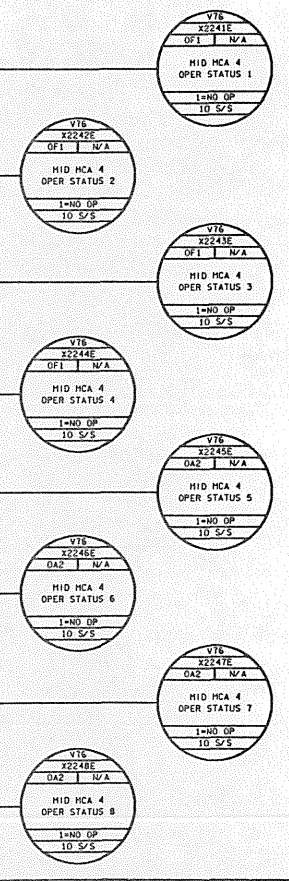

VENTS DOORS 4 AND 7 MOTORS AND MECHANICAL EQUIPMENT HAVE BEEN REMOVED. RELAYS AND RELAY LOGIC, INCLUDING SWITCHING, COMMANDING AND POSITION FEEDBACK, ARE STILL OPERATIONAL

9. SEE TABLE 2-I FOR VENDOR DRAWING REFERENCES

8. PBD= PAYLOAD BAY DOORS
PBM= PAYLOAD BAY MECHANICAL

ONLY ON FLIGHTS USING STARBOARD RMS

SPARE CIRCUITRY

5. EXCEPT FOR PAYLOAD RETENTION LATCH MOTORS (SHEET 2), WHEN 'A' AND 'B' RELAYS ARE INDICATED FOR A PARTICULAR MOTOR POWER CIRCUIT (I.E. CLS A AND CLS B, OPN A AND OPN B--STW A AND STW B), THEN BOTH THE 'A' AND 'B' RELAYS MUST BE OPERATED FOR AC POWER TRANSFER TO THE MOTOR. NORMALLY, POSITION FEEDBACK SIGNALS WILL AUTOMATICALLY DE-ENERGIZE THE RELAYS AND REMOVE AC POWER FROM THE MOTORS WHEN DESIRED POSITION IS REACHED

RELAY WIRING SEQUENCE FOR RELAYS CONNECTED IN SERIES TO AN MCA OPER STATUS TELEMETRY EVENT HAS BEEN CHANGED TO SIMPLIFY DRAWING. PROPER SEQUENCE IS INDICATED BY NUMBERS NEAR RELAY POLE WITH THE NUMBER 1 RELAY POLE BEING CONNECTED TO THE 5.1K RESISTOR

RELAY LOGIC POWER IS USED TO OPERATE RELAYS COMMANDED VIA MDM SIGNALS AND MAY BE USED WHEN COMMANDING RELAYS VIA MANUAL SWITCHES. RELAY LOGIC POWER IS ALSO USED TO POWER POSITION FEEDBACK SIGNALS THAT DE-ENERGIZE RELAYS, DRIVE TALKBACKS AND TELEMETRY WHEN DESIRED POSITION IS REACHED

2. MOTOR CONTROL ASSEMBLIES (MCA'S) CONTAIN RELAY LOGIC WHEREBY 3 PHASE AC MOTOR POWER IS APPLIED AS ABC OR ACB PHASE SEQUENCE FOR MOTOR ROTATION DIRECTION CONTROL. AC MOTOR POWER IS REMOVED (RELAYS DE-ENERGIZED) WHEN DESIRED POSITION IS REACHED.

NOTES:

EACH RELAY POLE, IN A SERIES CONNECTION TO AN MCA OPER STATUS TELEMETRY EVENT, HAS A FOURTH POLE ON THE INDICATED MOTOR CONTROL RELAY. SEE REFERENCED DRAWING FOR REST OF RELAY CIRCUIT. (TYPICAL RELAY SHOWN BELOW)

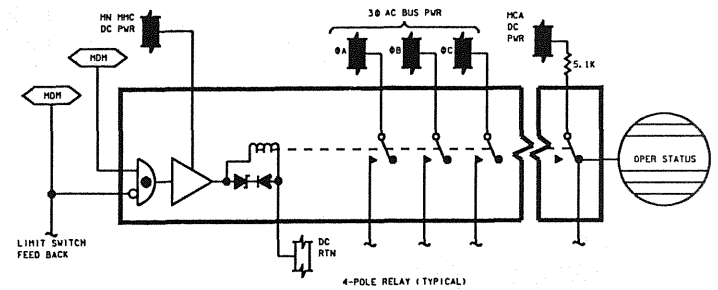

4 MMC2/4 3

SIGNATURE	DATE	NATIONAL AERONAUTICS AND SPACE ADMINISTRATION LYNDON B. JOHNSON SPACE CENTER HOUSTON, TEXAS
DSGN P. SHERRILL	8/21/78	
DR		
ENGR C. GUDERIAN		MCA DISTRIBUTION
ENGR	2/16/96	
APP	2/16/96	
APP		SPACE SHUTTLE / DWG NO 2.4
CADS J. K. Kimbler	6-17-96	ALL
LTR E / PCN		121 X 34 / PAGE / SHEET 3 OF 3

BASIC REV E-6

R | Q | P | O | N | M | L | K | J | I

V37K2003Y
V37K2002Y
PF 2
PBD OPER ENABLE CMD 2B
PBD OPER ENABLE CMD 2A
V_{AC3} MMC2
30
FROM PBD ENABLE SYS 1
V_{MNC} MMC3
RPC 5A 10
V_{MNC} MMC2
K42
K54
5.1K
K61
K63
V_{AC3PBD} MMC2
V_{AC3PBM} MMC2
V16 X21736 AC3PBM/PBD MMC2 BUS ENABLE 1 1=DISABLE 1 S/S
V16 X21746 AC3PBM/PBD MMC2 BUS ENABLE 2 1=DISABLE 1 S/S
30 MOTOR POWER
RLY LOGIC POWER
VENT DOORS
LEFT NO 3 MOTOR 1 15.1-2
RIGHT NO 4/7 MOTOR 1 15.1-2
LEFT NO 6 MOTOR 2 15.1-3
K31 OPN B
K45 OPN A
K33 CLS B
K35 CLS A
K40 OPN B
K26 OPN A
K28 CLS B
K30 CLS A
K5 OPN B
K15 OPN A
K3 CLS B
K1 CLS A
V_{AC3PBD} MMC2
V_{MNC} MMC2
30 MOTOR PWR
RLY LOGIC PWR
PAYLOAD BAY DOORS
PORT AFT BKHD LATCH MOTOR 2 14.2-1
℄ 1-4 LATCH MOTOR 2 14.2-1
℄ 5-8 LATCH MOTOR 2 14.2-1
K19 REL
K7 LCH
K4 REL
K6 LCH
K50 REL
K38 LCH

V37K2005Y
V37K2004Y
PF 1
PBD OPER ENABLE CMD 3B
PBD OPER ENABLE CMD 3A
V_{AC2} MMC2
K39
K37
K61
K63
V_{AC2PBD} MMC2
V_{AC2PBM} MMC2
V16 X21722E AC2PBM/PBD MMC2 BUS ENABLE 1 1=DISABLE 1 S/S
V16 X21731E AC2PBM/PBD MMC2 BUS ENABLE 2 1=DISABLE 1 S/S
V_{MNB} MMC2
V_{PRFLT1} MMC2&CRY0114
F7 2A
TO KU BAND ANT A 30 DEG DEPLOY LIMIT SW 1 (PWR FOR V54X0001E AND HI VOLT ENABLE)
30 MOTOR POWER
RLY LOGIC POWER
VENT DOOR
LEFT NO 3 MOTOR 2 15.1-2
K32 OPN B
K46 OPN A
K34 CLS B
K36 CLS A
V_{AC2PBD} MMC2
V_{MNB} MMC2
30 MOTOR PWR
RLY LOGIC PWR
PAYLOAD BAY DOORS
PORT PDU MOTOR 2 14.2-1
STBD AFT BKHD LATCH MOTOR 2 14.2-1
℄ 13-16 LATCH MOTOR 2 14.2-1
K12 CLS
K10 OPN
K25 REL
K13 LCH
K9 LCH
K21 REL
V_{AC2PBM} MMC2
V_{MNB} MMC2

V37K2009Y
V37K2008Y
PF 2
PBD OPER ENABLE CMD 5B
PBD OPER ENABLE CMD 5A
V_{AC2} MMC4
K41
K29
FROM PBD ENABLE SYS 2
V_{MNB} MMC2
RPC 5A 23
K49
K61
V_{AC2PBD} MMC4
V_{AC2PBM} MMC4
V16 X21915E AC2PBM/PBD MMC4 BUS ENABLE 1 1=DISABLE 1 S/S
V16 X21925E AC2PBM/PBD MMC4 BUS ENABLE 2 1=DISABLE 1 S/S
30 MOTOR POWER
RLY LOGIC POWER
VENT DOORS
LEFT 4/7 MOTOR 2 15.1-2
RIGHT NO 6 MOTOR 2 15.1-3
K9 CLS A
K21 CLS B
K11 OPN A
K23 OPN B
K1 OPN A
K13 OPN B
K3 CLS A
K15 CLS B
V_{AC2PBD} MMC4
V_{MNB} MMC4
30 MOTOR PWR
RLY LOGIC PWR
PAYLOAD BAY DOORS
STBD PDU MOTOR 2 14.2-1
PORT FWD BKHD LATCH MOTOR 2 14.2-1
STBD FWD BKHD LATCH MOTOR 2 14.2-1
K43 OPN
K33 LCH
K45 REL
K31 CLS
K35 LCH
K47 REL

H4 2.4-2 PBM POWER ON SYS 2
CNTLBC1
CNTLBC2

V37K2011Y
V37K2010Y
PF 2
PBD OPER ENABLE CMD 6B
PBD OPER ENABLE CMD 6A
V_{AC3} MMC4
K20
K8
FROM PBD ENABLE SYS 2
V_{MNC} MMC3
RPC 5A 11
V_{MNC} MMC4
K30
K42
V_{AC3PBD} MMC4
V_{AC3PBM} MMC4
V16 X21934E AC3PBM/PBD MMC4 BUS ENABLE 1 1=DISABLE 1 S/S
V16 X21944E AC3PBM/PBD MMC4 BUS ENABLE 2 1=DISABLE 1 S/S
V_{PRFLT2} MMC4&CRY0263
F3 2A
TO KU BAND ANT A 30 DEG DEPLOY LIMIT SW 2 (POWER FOR V54X0002E)
30 MOTOR POWER
RLY LOGIC POWER
VENT DOORS
RIGHT NO 3 MOTOR 2 15.1-2
RIGHT NO 5 MOTOR 2 15.1-2
K79 CLS A
K77 CLS B
K73 OPN A
K75 OPN B
K14 OPN A
K16 OPN B
K18 CLS A
K6 CLS B
V_{AC3PBD} MMC4
V_{MNC} MMC4
30 MOTOR PWR
RLY LOGIC PWR
PAYLOAD BAY DOORS
PORT PDU MOTOR 1 14.2-1
STBD AFT BKHD LATCH MOTOR 1 14.2-1
℄ 9-12 LATCH MOTOR 2 14.2-1
℄ 13-16 LATCH MOTOR 1 14.2-1
K22 OPN
K10 CLS
K26 LCH
K12 LCH
K24 REL
K40 REL
K28 LCH
K38 REL

H5 2.4-2 PBM POWER ON SYS 2
CNTLAB1/CA1
CNTLAB2/CA2

DATE: 02/16/96 | NAME: JMB | VERSION: INK18

V U T S R Q P O N

8 7 6 5 4 3 2 1

PL BAY MECH PWR SYS 1

V75 S2875E OFF | N/A — PAYLOAD BAY MECH PWR SYS 1 1=ON 1 S/S

$V_{CNTLAB1}$ F1 1A — $V_{CNTLCA1}$ F16 1A

$V_{CNTLAB2}$ F33 1A — $V_{CNTLCA2}$ F34 1A

$V_{CNTLBC1}$ F5 1A

$V_{CNTLBC2}$ F27 1A

ON — OFF — PNL R13A2 S1

PBM POWER ON SYS 1 TO MMC1 (AC1) — 6, 5 — $\angle Z_5$ 2,4-2

MCA LOGIC — MCA POWER AC3 3Ø — MID 2 — 3A — PNL HA73C+C CB12

MCA LOGIC — MN C — MID 2 — ON — OFF — PNL HA73C+A S12

V_{AC3} 30 — $V_{CNTLCA3}$ 1.2K

V37K2003Y — PF 2 — PBD OPER ENABLE CMD 2B

V37K2002Y — PF 2 — PBD OPER ENABLE CMD 2A

V_{MNC} MPC3 — RPC 5A 10

MCA LOGIC — MCA POWER AC2 3Ø — MID 2 — 3A — PNL HA73C+C CB7

V_{AC2} 30

V37K2005Y — PF 1 — PBD OPER ENABLE CMD 3B

V37K2004Y — PF 1 — PBD OPER ENABLE CMD 3A

MCA LOGIC — MN B — MID 2 — ON — OFF — PNL HA73C+A S7

$V_{CNTLBC3}$ 1.2K

V_{MNB} MPC2 — RPC 5A 10

V_{PRFLT1} MMC2&CRY0164

V_{AC3} MMC2 — 30 — K42 — K54 — K61 — K63

FROM PBD ENABLE SYS 1 — $\angle Z_3$ 9

V_{AC3PBD} MMC2 — V76 X2173E OAZ | N/A — AC3PBM/PBD MMC2 BUS ENABLE 1 1=DISABLE 1 S/S

V_{AC3PBM} MMC2 — V76 X2174E OAZ | N/A — AC3PBM/PBD MMC2 BUS ENABLE 2 1=DISABLE 1 S/S

5.1K

V_{MNC} MMC2

V_{AC2} MMC2 — 30 — K39 — K37 — K58 — K56

FROM PBD ENABLE SYS 1 — $\angle Z_3$ 8

V_{AC2PBD} MMC2 — V76 X2172E OAZ | N/A — AC2PBM/PBD MMC2 BUS ENABLE 1 1=DISABLE 1 S/S

V_{AC2PBM} MMC2 — V76 X2171E OAZ | N/A — AC2PBM/PBD MMC2 BUS ENABLE 2 1=DISABLE 1 S/S

V_{MNB} MMC2

F7 2A — TO KU BAND ANT A 30 DEG DEPLOY LIMIT SW 1 (PWR FOR V54100001E AND HI VOLT ENABLE)

PL BAY DR SYS 1

$V_{CNTLAB1}$ F37 1A — TO AC1 PBD MMC1 RELAYS (K66, K78) — 7 — $\angle Z_5$ 2,4 SHT 2

$V_{CNTLBC1}$ F38 1A — TO AC2 PBD MMC2 RELAYS (K37, K39) — 8 — $\angle Z_6$

$V_{CNTLCA1}$ F39 1A — TO AC3 PBD MMC2 RELAYS (K42, K54) — 9 — $\angle Z_4$

ENABLE — DISABLE — PNL R13A2 S13

PL BAY DR SYS 2

$V_{CNTLAB2}$ F40 1A — TO AC1 PBD MMC3 RELAYS (K20, K22) — 10 — $\angle Z_4$ 2,4 SHT 2

$V_{CNTLBC2}$ F41 1A — TO AC2 PBD MMC4 RELAYS (K29, K41) — 11 — $\angle Z_6$

$V_{CNTLCA2}$ F42 1A — TO AC3 PBD MMC4 RELAYS (K8, K20) — 12 — $\angle Z_2$

ENABLE — DISABLE — PNL R13A2 S14

MCA LOGIC — MCA POWER AC2 3Ø — MID 4 — 3A — PNL HA73C+D CB9

V_{AC2} 30

V37K2008Y — PF 2 — PBD OPER ENABLE CMD 5B

V37K2007Y — PF 2 — PBD OPER ENABLE CMD 5A

MCA LOGIC — MN B — MID 4 — ON — OFF — PNL HA73C+B 59

$V_{CNTLBC3}$ 1.2K

V_{MNB} MPC2 — RPC 5A 23

$\angle Z_4$ 2,4-2 — PBM POWER ON SYS 2 — 2 CNTLBC1 — 1 CNTLBC2

MCA LOGIC — MCA POWER AC3 3Ø — MID 4 — 3A — PNL HA73C+D CB13

V_{AC3} 30

V37K2011Y — PF 2 — PBD OPER ENABLE CMD 6B

V37K2010Y — PF 2 — PBD OPER ENABLE CMD 6A

MCA LOGIC — MN C — MID 4 — ON — OFF — PNL HA73C+B S13

$V_{CNTLCA3}$ 1.2K

V_{MNC} MPC3 — RPC 5A 11

V_{PRFLT2} MMC4&CRY0263

$\angle Z_5$ 2,4-2 — PBM POWER ON SYS 2 — 3 CNTLAB1/CA1 — 4 CNTLAB2/CA2

V_{AC2} MMC4 — 30 — K41 — K29 — K49 — K61

FROM PBD ENABLE SYS 2 — $\angle Z_2$ 11

V_{AC2PBD} MMC4 — V76 X2191E OA1 | N/A — AC2PBM/PBD MMC4 BUS ENABLE 1 1=DISABLE 1 S/S

V_{AC2PBM} MMC4 — V76 X2192E OA1 | N/A — AC2PBM/PBD MMC4 BUS ENABLE 2 1=DISABLE 1 S/S

5.1K

V_{MNB} MMC4

V_{AC3} MMC4 — 30 — K20 — K8 — K30 — K42

FROM PBD ENABLE SYS 2 — $\angle Z_1$ 12

V_{AC3PBD} MMC4 — V76 X2193E OA1 | N/A — AC3PBM/PBD MMC4 BUS ENABLE 1 1=DISABLE 1 S/S

V_{AC3PBM} MMC4 — V76 X2194E OA1 | N/A — AC3PBM/PBD MMC4 BUS ENABLE 2 1=DISABLE 1 S/S

V_{MNC} MMC4

F3 2A — TO KU BAND ANT A 30 DEG DEPLOY LIMIT SW 2 (POWER FOR V54100002E)

30 MOTOR POWER

RLY L

DATE> 05/26/90	NAME> BJT	VERSION> BPT> 1
DATE> 05/26/90	NAME> MFB	VERSION> ING> 1
DATE> 10/04/90	NAME> BJT	VERSION> ING> 2

ORBITER | PALLET

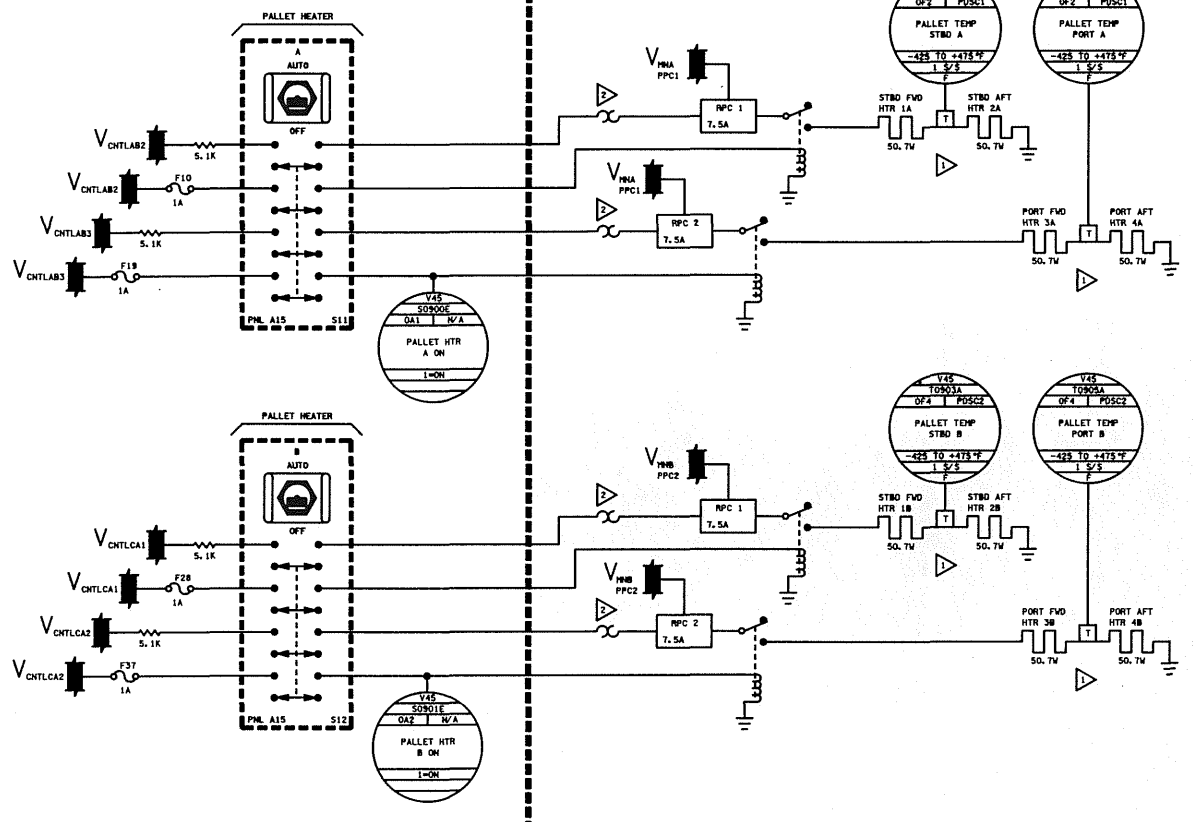

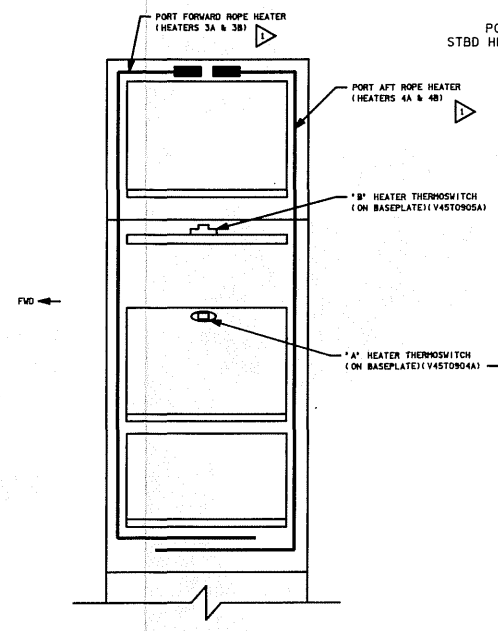

VIEW OF UPPER PALLET PORT SIDE
LOOKING INBOARD
(BASEPLATES SHOWN - NOT TO SCALE)

PORT HEATER INSTALLATION SHOWN;
STBD HEATER INSTALLATION IS MIRROR IMAGE

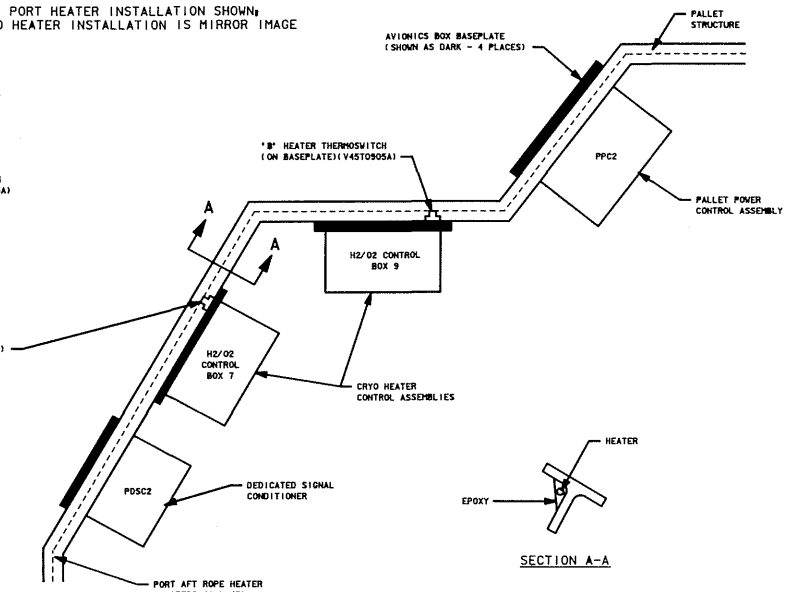

VIEW OF UPPER PALLET PORT SIDE
LOOKING FORWARD
(NOT TO SCALE)

PALLET HEATERS

ORBITER | PALLET

PALLET EPDC

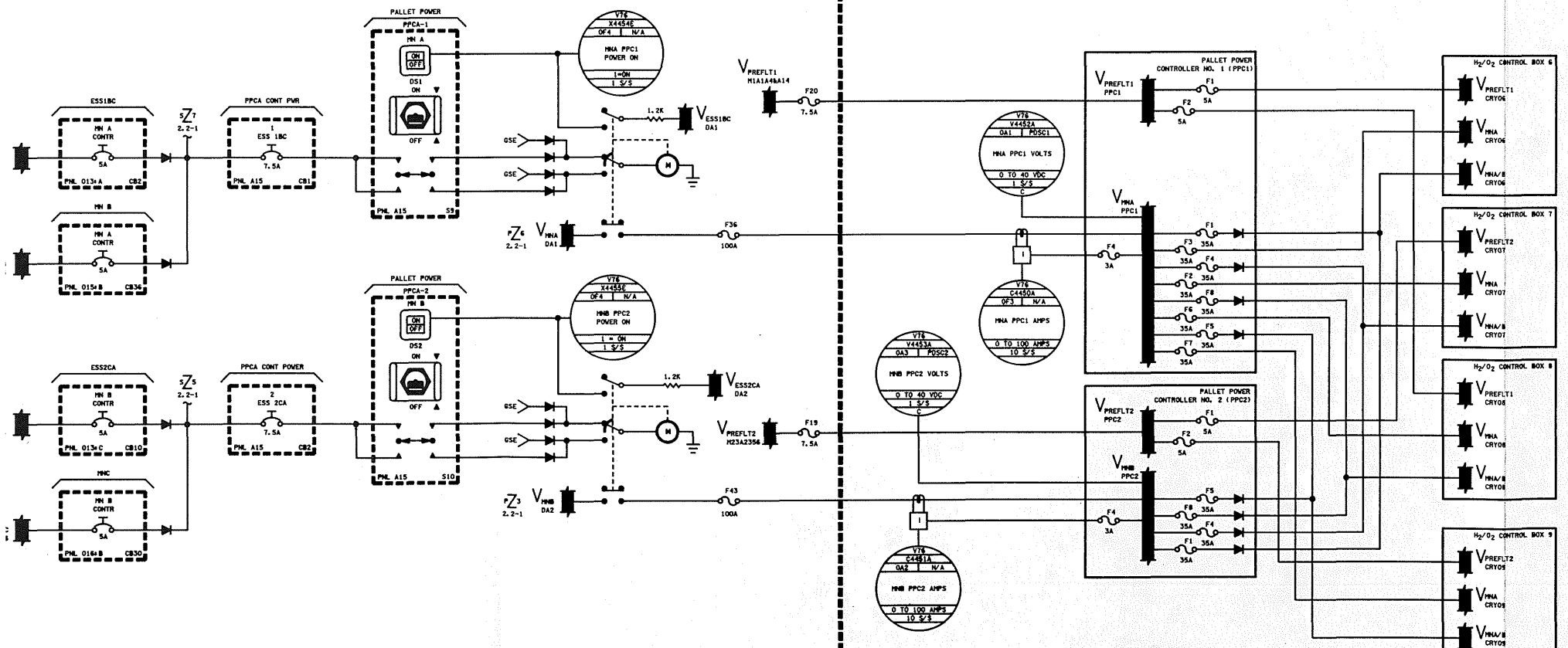

3. REFER TO TABLE 2.1 FOR DRAWING TRACEABILITY

▷2 THERMOSWITCH OPERATING RANGE:
CLOSES AT -30±5°F
OPENS AT -10±5°F
REQUIRED TO MAINTAIN AVIONICS BASEPLATE TEMPERATURES BETWEEN -45°F AND 130°F

NOTES: ▷1 EACH HEATER IS 50.7 WATTS AT 27.5 VDC. EACH ROPE HEATER CONTAINS BOTH A & B HEATERS AND IS 160 INCHES LONG

5 EDO EPDC/HTR

SIGNATURE		DATE	NATIONAL AERONAUTICS AND SPACE ADMINISTRATION LYNDON B. JOHNSON SPACE CENTER HOUSTON, TEXAS
DSGN	MICHAEL A. GILLESPIE	08/14/90	
DR	MICHAEL A. GILLESPIE	08/14/90	
ENGR	LARRY MINTER		EDO PALLET EPDC/HEATERS
ENGR	Larry Minter 10/4/90		
APP	Paul Dye 10/3/90		
APP			SPACE SHUTTLE / DWG NO
OMNIPLAN	S.K. Kimbell 10-5-90		EDO> OV102, OV105 / 2.5
LTR E	PCN		68 X 34 / PAGE / SHEET 1 OF 1

BASIC REV E

L K J I H G F E D

8 7 6 5 4 3 2 1

ORBITER | PALLET

PALLET HEATERS

PALLET EPDC

ORBITER | PALLET

BASIC REV E

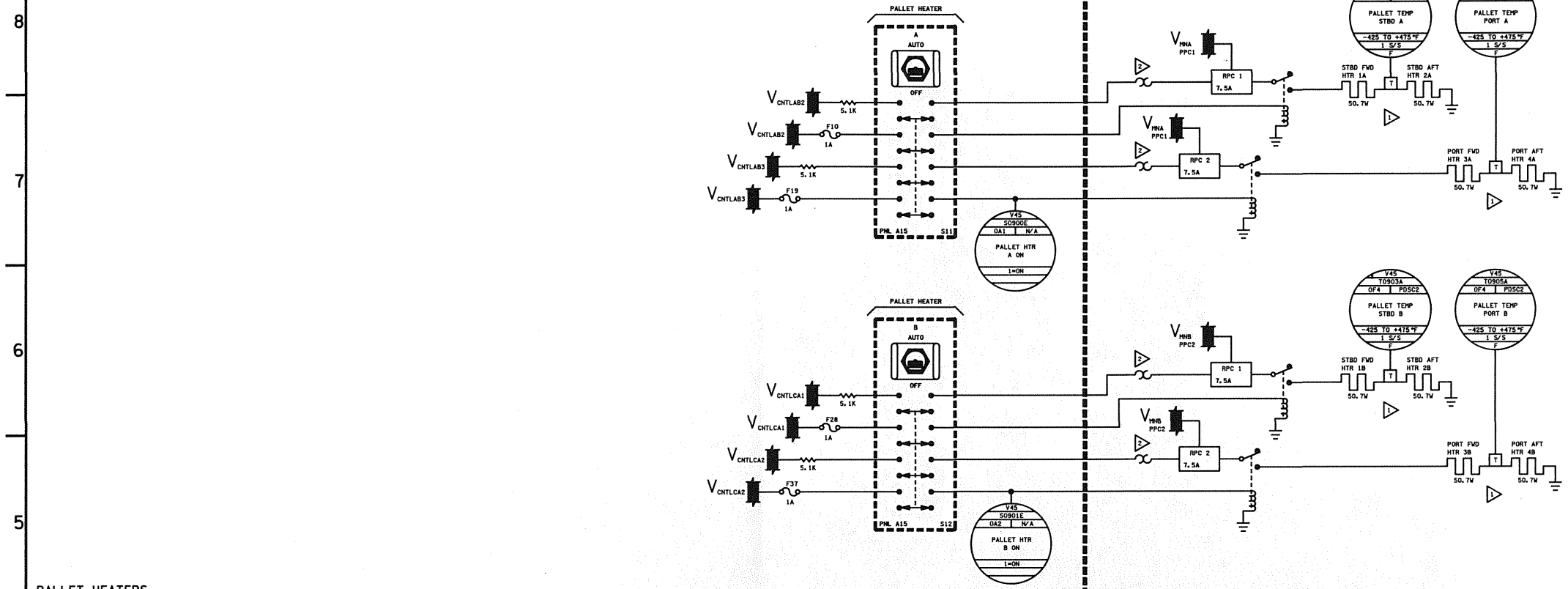

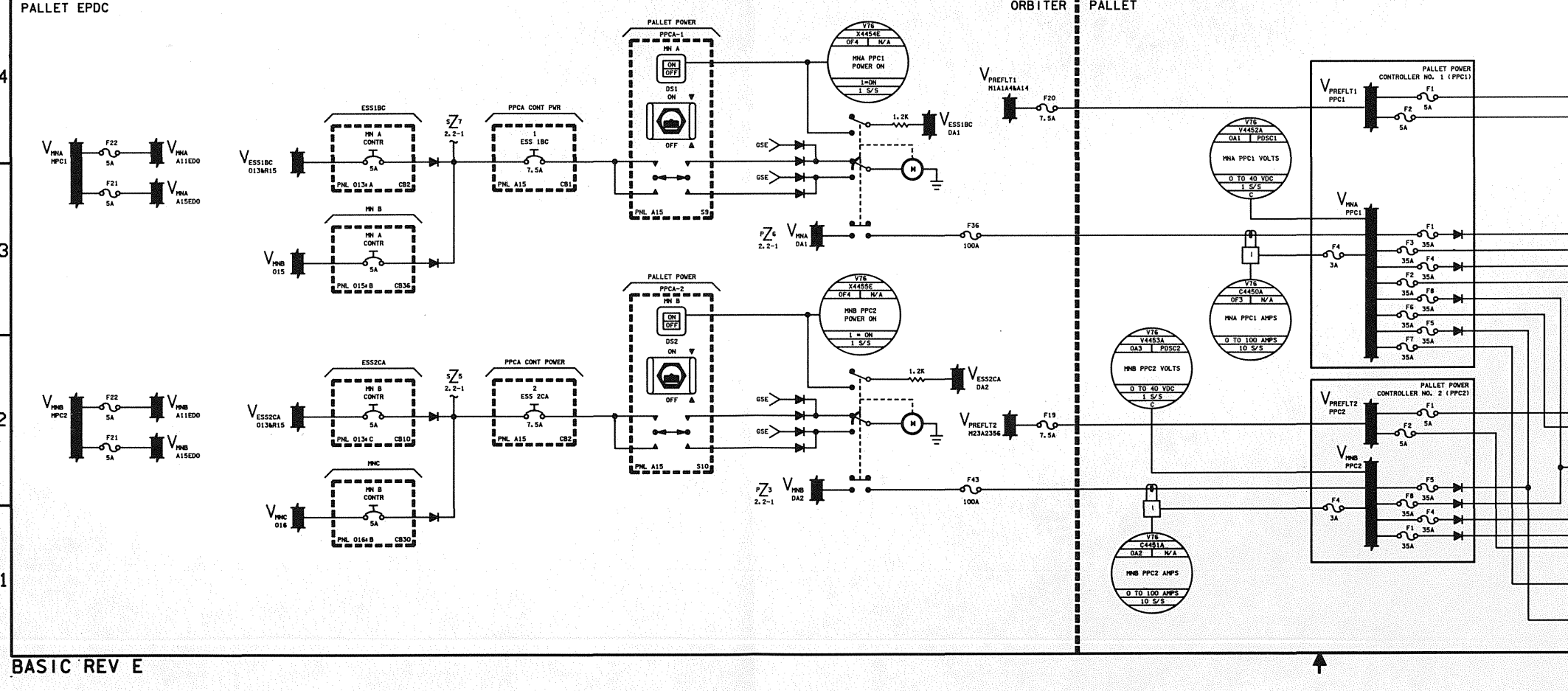

DATE: 07/25/94	NAME: MAG	VERSION: BPTx 2
DATE: 08/08/94	NAME: MDU	VERSION: BPTx 3
DATE: 08/10/94	NAME: MAG	VERSION: INKx 1

POWER SWITCHING UNIT (PSU)

DOCKING SYSTEM POWER
PSU POWER
MN A (MN B)
ON
OFF
PNL A7A3
V_{MNA} MPC1 (MNB MPC2)
RPC 17 20A (17)
+Z5 (2) 3A
+Z7 (1) 3A

MID POWER CONTROLLER NO. 1 (MPC 1)
V_{MNA} A7
5.1K
PNL A7
F30 10A
F31 10A
F38 10A
F39 10A
F36 10A
F37 10A
F32 10A
V_{MNA} MPC1
+Z5 4.5-1 TO PORT VEST DOCKING LGT

DSP
SYS PWR
SYS 1 MN A
ON
OFF
DS1
PNL A7A3
S1

DSP
MN A LGC 3
7.5A
PNL A7A3 CB11

DSP
MN A LGC 1
7.5A
PNL A7A3 CB12

MID POWER CONTROLLER NO. 2 (MPC 2)
V_{MNB} A7
5.1K
PNL A7
F30 10A
F31 10A
F38 10A
F39 10A
F36 10A
F37 10A
F32 10A
V_{MNB} MPC2
+Z5 4.5-1 TO STBD VEST DOCKING LGT

DSP
SYS PWR
SYS 2 MN B
ON
OFF
DS4
PNL A7A3
S2

DSP
MN B LGC 1
7.5A
PNL A7A3 CB13

DSP
MN B LGC 2
7.5A
PNL A7A3 CB14

MID POWER CONTROLLER NO. 3 (MPC 3)
F27 10A
F28 10A
F25 10A
F26 10A
V_{MNC} MPC3

DSP
MN C LGC 2
7.5A
PNL A7A3 CB15

DSP
MN C LGC 3
7.5A
PNL A7A3 CB16

PNL A8A2 (APDS CONTROL PANEL)

CONTROL PANEL POWER A
ON
OFF
PNL A8A3
$V_{MN\ A/B\ PNL\ LGC\ A}$
$V_{PNL\ LGC\ A\ RTN}$
$V_{+A\ CNTL\ PNL}$
$V_{(-)}$
+6V FROM DSCU
V53 X0758E 0A3 DCU2 CNTL PNL LGC PWR A 1=ON 1 S/S

APDS POWER
A_{PDS}
ON
OFF
PNL A8A2
APDS
V_{+Ac}
V_{-c1}
+6V FROM DSCU
V53 X0790E 0A3 DCU2 SYSTEM POWER BUS A 1=ON 1 S/S
$V_{PNL\ LGC\ A\ RTN}$

CONTROL PANEL POWER B
ON
OFF
PNL A8A3
$V_{MN\ B/C\ PNL\ LGC\ B}$
$V_{PNL\ LGC\ B\ RTN}$
$V_{D\ CNTL\ PNL}$
$V_{(-)}$
+6V FROM DSCU
V53 X0759E 0A2 DCU2 CNTL PNL LGC PWR B 1=ON 1 S/S

APDS POWER
B_{PDS}
ON
OFF
PNL A8A2
BDS
V_{+Bc}
V_{-c2}
+6V FROM DSCU
V53 X0791E 0A3 DCU2 SYSTEM POWER BUS B 1=ON 1 S/S
$V_{PNL\ LGC\ B\ RTN}$

CONTROL PANEL POWER C
ON
OFF
PNL A8A3
$V_{MN\ C/A\ PNL\ LGC\ C}$
$V_{PNL\ LGC\ C\ RTN}$
$V_{+B\ CNTL\ PNL}$
$V_{(-)}$
+6V FROM DSCU
V53 X0760E 0A2 DCU2 CNTL PNL LGC PWR C 1=ON 1 S/S

APDS POWER
C_{PDS}
ON
OFF
PNL A8A2
CDS
V_{+Bc}
V_{-c3}
+6V FROM DSCU
V53 X0792E 0A3 DCU2 SYSTEM POWER BUS C 1=ON 1 S/S
$V_{PNL\ LGC\ C\ RTN}$

V_{+CV2}
V_{+CV1}
V_{-CV2}
V_{-CV1}
V_{VA}
V_{VB}
V_{VC}

NOTES: ▷ ALL GROUNDS LOCATED IN PLB

6 ODS PWR

SIGNATURE		DATE
DSGN	S. DAWSON	7/7/94
DR	M.G., M.U.	7/25/94
ENGR	R. ARMSTRONG	
ENGR		8/3/94
APPL		9/21/94
APP		
CADS	S. Kinkead	9/22/94
LTR	E	PCN 4

NATIONAL AERONAUTICS AND SPACE ADMINISTRATION
LYNDON B. JOHNSON SPACE CENTER HOUSTON, TEXAS

ORBITER DOCKING SYSTEM/POWER

SPACE SHUTTLE | DWG NO 2.6
ALL | 66 X 34 | PAGE | SHEET 1 OF 1

BASIC REV E-4

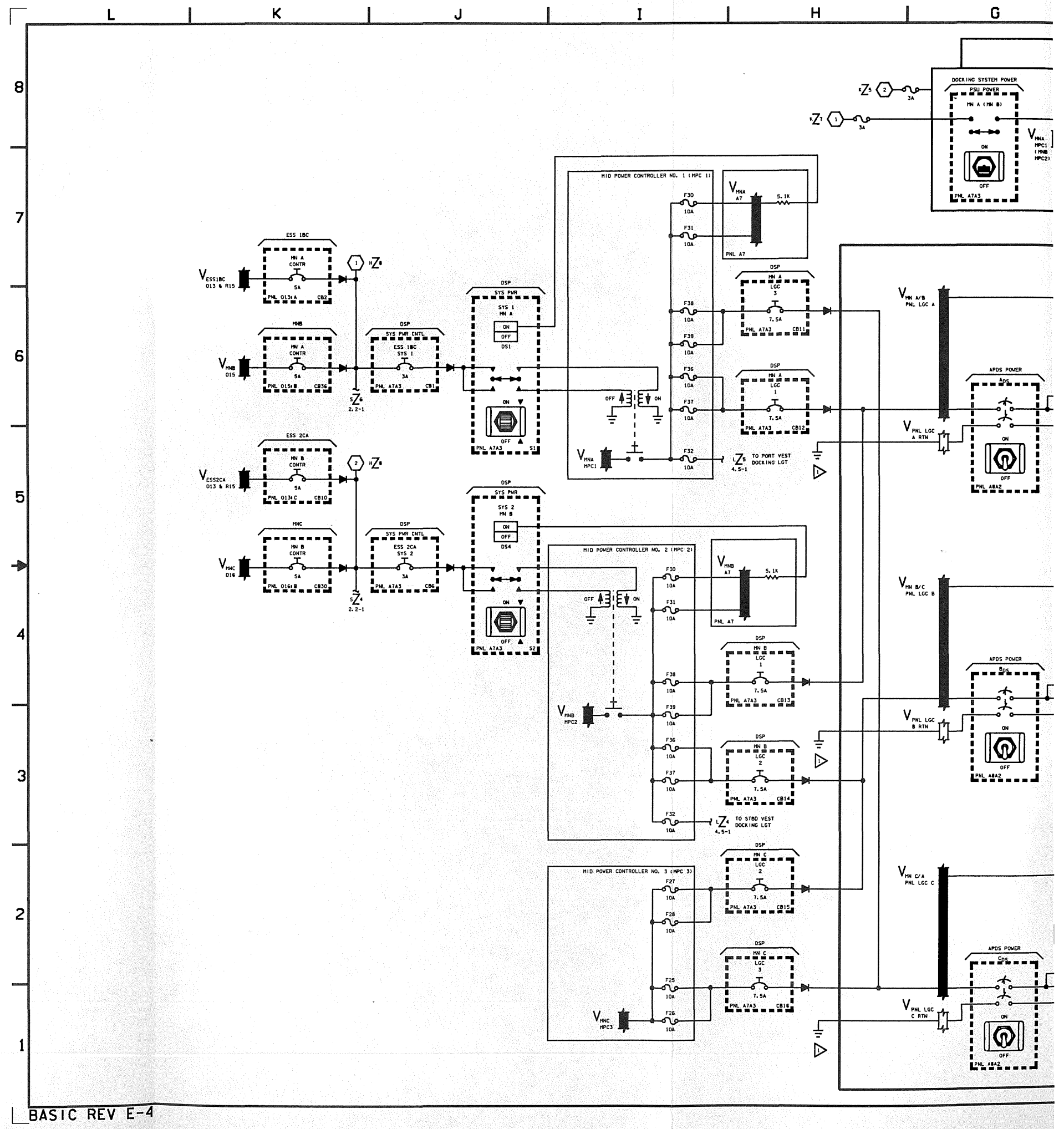
L
K
J
I
H
G
8
7
6
5
4
3
2
1
ESS 1BC
MN A CONTR
5A
PNL 013A
CB2
V_{ESS1BC} 013 & R15
MNB
MN A CONTR
5A
PNL 015B
CB36
V_{MNB} 015
MNC
MN B CONTR
5A
PNL 016B
CB30
V_{MNC} 016
ESS 2CA
MN B CONTR
5A
PNL 013C
CB10
V_{ESS2CA} 013 & R15
DSP
SYS PWR CNTL
ESS 1BC SYS 1
3A
PNL A7A3
CB1
DSP
SYS PWR CNTL
ESS 2CA SYS 2
3A
PNL A7A3
CB6
DSP
SYS PWR
SYS 1 MN A
ON
OFF
DS1
PNL A7A3
S1
DSP
SYS PWR
SYS 2 MN B
ON
OFF
DS4
PNL A7A3
S2
MID POWER CONTROLLER NO. 1 (MPC 1)
MID POWER CONTROLLER NO. 2 (MPC 2)
MID POWER CONTROLLER NO. 3 (MPC 3)
F30 10A
F31 10A
F38 10A
F39 10A
F36 10A
F37 10A
F32 10A
F27 10A
F28 10A
F25 10A
F26 10A
V_{MNA} A7
5.1K
PNL A7
V_{MNB} A7
5.1K
PNL A7
V_{MNA} MPC1
V_{MNB} MPC2
V_{MNC} MPC3
OFF
ON
DSP
MN A LGC 3
7.5A
PNL A7A3
CB11
DSP
MN A LGC 1
7.5A
PNL A7A3
CB12
DSP
MN B LGC 1
7.5A
PNL A7A3
CB13
DSP
MN B LGC 2
7.5A
PNL A7A3
CB14
DSP
MN C LGC 2
7.5A
PNL A7A3
CB15
DSP
MN C LGC 3
7.5A
PNL A7A3
CB16
DOCKING SYSTEM POWER
PSU POWER
MN A (MN B)
ON
OFF
PNL A7A3
V_{MNA} MPC1 (MNB MPC2)
3A
3A
$V_{MN\ A/B}$ PNL LGC A
$V_{PNL\ LGC\ A\ RTN}$
APDS POWER
Apds
ON
OFF
PNL A8A2
$V_{MN\ B/C}$ PNL LGC B
$V_{PNL\ LGC\ B\ RTN}$
Bpds
$V_{MN\ C/A}$ PNL LGC C
$V_{PNL\ LGC\ C\ RTN}$
Cpds
TO PORT VEST DOCKING LGT
TO STBD VEST DOCKING LGT
2.2-1
4.5-1

DATE: 05/31/96	NAME: VSH	VERSION: BPT: 2
DATE: 08/01/96	NAME: LAM	VERSION: INR: 1
DATE: 08/09/96	NAME: VSH	VERSION: INR: 2

CONV B

CONV A

APCU 2

INRUSH CURRENT LIMITER AND POWER INPUT RELAY

INPUT FILTER AND STORAGE CAPACITORS

.02Ω

2800μF

270μF

V_{28VF}

28VF RET

INTERNAL POWER SUPPLY

12V

+15V

-15V

28V

RET

ON

INRUSH RELAY DRIVE AND INPUT U/V LOCKOUT

15V

OFF

PWM

80 KHZ SQUARE WAVE
X% DUTY CYCLE FOR 140V OUT
X% DUTY CYCLE FOR 124V OUT

SD

12V

1ST STAGE DRIVER

2ND STAGE DRIVER

SNUBBER

T_1

PWR AMP STAGE

FULL WAVE RECTIFIER

OUTPUT FILTER

140V OUT

OUTPUT CURRENT SENSING

140V RET

TRANSFORMER CURRENT FEEDBACK

CURRENT SENSING AND FEEDBACK

VOLTAGE FEEDBACK

CURRENT LIMIT

HARD CURRENT LIMITER

CURRENT MEAS

START/RESET

OUTPUT O/V

OUTPUT U/V

OVERCURRENT TIMER

CURRENT SHARE CIRCUIT

SHARE BUS

A CONV SHARE

TO B CONV SHARE CIRCUIT

SHUTDOWN LATCH

SET/SHUTDOWN

RESET

CONV A HTRS

CONVERTER A HEATER DRIVERS

OUTPUT RELAY DRIVE

B CONV 140V OUT

B CONV RET

OUTPUT EMI FILTER

TO APCU 1 SHARE BUS IF REQUIRED

APCU 2 OUTPUT VOLTS HI RES
120 TO 145V

APCU 2 OUTPUT VOLTS LO RES
0 TO 200V

APCU 2 TEMP A

APCU 2 TEMP B

APCU 2 CONV A CURRENT

APCU 2 CONV B CURRENT

ILIM ALL B NC

ILIM ALL A NC

NC

NC

NC

NC

1UV

OOV

OUV

OOC

NC

NC

J1

J6

A

B

C

D

E

OUTPUT CONFIGURATIONS

CONFIG A

CONFIG B

CONFIG C

CONFIG D

CONFIG E

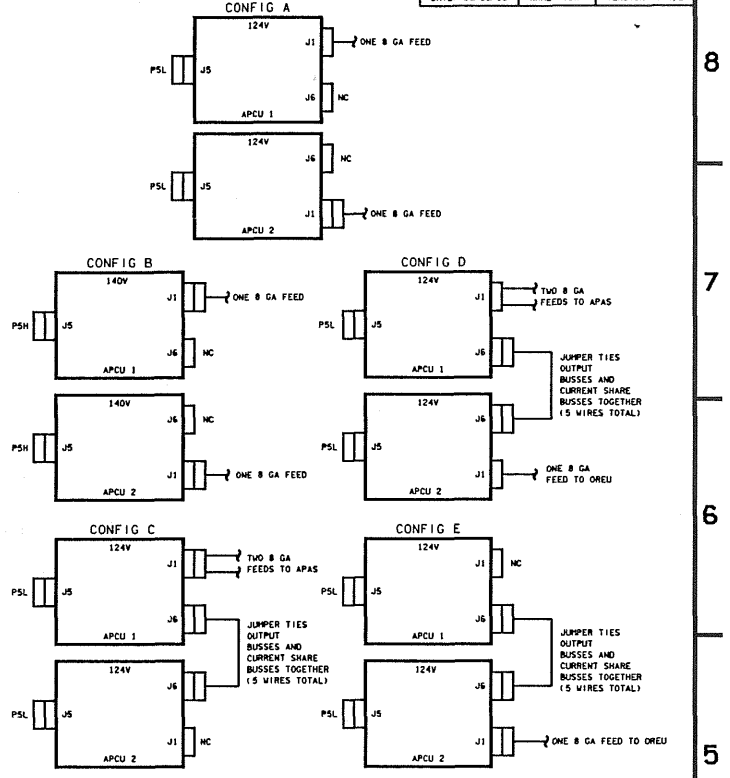

△1 CONVERTER HEATERS ARE SWITCHED ON AT LOW OUTPUT CURRENT LEVELS TO ACT AS AN INTERNAL LOAD TO HELP MAINTAIN STABLE OUTPUT VOLTAGE LEVELS

△2 THE TRIP STATUS VOLTAGE ENCODER PRODUCES AN ANLOG OUTPUT OF 16 DIFFERENT LEVELS TO INDICATE WHICH SENSOR TYPE PRODUCED THE SHUT-DOWN COMMAND. OUTPUT IS AS FOLLOWS:

TRIP CONDITIONS (X=TRIP)				OUTPUT VOLTAGE (VDC)
OV	OUV	OC	IUV	
X	X	X	X	+5.00
X	X	X		+4.34
X	X		X	+3.69
X	X			+3.03
X		X	X	+2.35
X		X		+1.69
X			X	+1.04
X				+0.38
	X	X	X	-0.24
	X	X		-0.91
	X		X	-1.55
	X			-2.22
		X	X	-2.89
		X		-3.56
			X	-4.20
				-4.86 (NO TRIP)

△3 THE SSP TALKBACKS ARE DRIVEN ON (GRAY) FOR APCU VOLTAGE >80 ± .-VDC. ELSE THE TALKBACK REMAINS IN OFF (BARBERPOLE)

△4 WITH PSL INSTALLED (NO JUMPERS/OPEN CIRCUIT) FET IS TURNED ON CREATING A PATH TO GROUND FROM THE CONTROL CIRCUIT. GROUND IS USED TO REDUCE A RESISTOR VALUE IN A VOLTAGE DIVIDER AND THUS LOWER THE CONTROL VOLTAGE GOING TO THE CIRCUIT. THIS SETS THE CONTROL CIRCUIT TO OPERATE AT A LOWER VOLTAGE (124 VDC MODE). WITH PSH INSTALLED (JUMPERS/SHORT CIRCUIT) THE FET GATE IS PULLED TO GROUND TURNING THE FET OFF. WITH NO GROUND, THE VOLTAGE DIVIDER STAYS AT ITS INITIAL (HIGHER) VALUE AND THE CONTROL CIRCUIT OPERATES AT THE HIGHER VOLTAGE (140 VDC) MODE

VOLTAGE SELECT CIRCUIT (TYP)

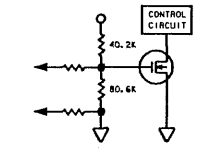

△5 CURRENT SHARE CIRCUIT: CONVERTER WITH HIGHEST OUTPUT VOLTAGE WILL AUTOMATICALLY TAKE CONTROL BY OUTPUTING LARGEST CONTROL VOLTAGE ONTO THE SHARE BUS. SLAVE CURRENT SHARE CIRCUITS WILL READ THIS VOLTAGE AND COMPENSATE BY CHANGING THE VALUE OF THE ADJUST RESISTER AND DECREASING THE FEEDBACK VOLTAGE OF THE SLAVE CONVERTERS

△6 HARD CURRENT LIMITER AND OVERCURRENT TIMER: CURRENT LIMIT FOR A MINIMUM OF 25 MILLISECONDS WHEN CONVERTER CURRENT EXCEEDS 14.7 AMPS. START OVERCURRENT TIMER WHEN CURRENT LIMITING BEGINS OR WHEN CONVERTER CURRENT EXCEEDS 35 AMPS. RESET THE TIMER IF CURRENT RETURNS TO LESS THAN 14.7 AMPS. OVERCURRENT TIMER ISSUES A SHUTDOWN DISCRETE AFTER TIMING UP TO BETWEEN 30 AND 60 MILLISECONDS WITHOUT RESETTING

△7 OUTPUT UNDERVOLT PROTECTION: ISSUES A SHUTDOWN DISCRETE WITHIN 10 MILLISECONDS AFTER THE OUTPUT VOLTAGE DROPS BELOW 115 ± 2.5 VDC FOR 50 CONSECUTIVE MILLISECONDS. ISSUES A SHUTDOWN DISCRETE AT APCU START-UP, IF THE OUTPUT FAILS TO REACH 115 VDC WITHIN 100 MILLISECONDS AFTER THE OUTPUT VOLTAGE EXCEEDS 15 VDC

△8 OUTPUT OVERVOLT PROTECTION: ISSUES A SHUTDOWN DISCRETE WITHIN 10 MICROSECONDS WHEN THE OUTPUT VOLTAGE EXCEEDS 178 ± 2 VDC (153 ± 2 VDC) OR WITHIN 10 (3 ± 1) MILLISECONDS WHEN THE OUTPUT VOLTAGE EXCEEDS 165 ± 2 VDC (130.5 ± 2.3 VDC) WHEN THE OUTPUT IS SET FOR 140 (124) VDC

△9 SHUTDOWN LATCH REMOVES POWER FROM 1ST STAGE DRIVERS WHEN SHUTDOWN DISCRETE IS RECEIVED FROM PROTECTION CIRCUITS, OR IF INPUT POWER <20V. LATCH IS RESET WHEN POWER INPUT SWITCH IS CYCLED FROM OFF TO ON

△10 INRUSH CURRENT LIMITER, LIMITS INRUSH WHEN PRI PL BUS IS FIRST CONNECTED TO ORBITER POWER

△11 INPUT U/V LOCKOUT AND INRUSH RELAY DRIVE: CLOSES INPUT SURGE RELAY WHEN POWER ON DISCRETE RECIEVED. ISSUES STARTUP DISCRETE TO PWM WHEN 28VF EQUALS 28V INPUT. 28VF>24.5, POWER ON SWITCH IS CLOSED, SHUTDOWN LATCH NOT "SET", AND INPUT SURGE RELAY CLOSED

NOTES: 1. MOST TELEMETRY AND COMMAND CIRCUITS IN THE B CONVERTERS ARE NOT CONNECTED

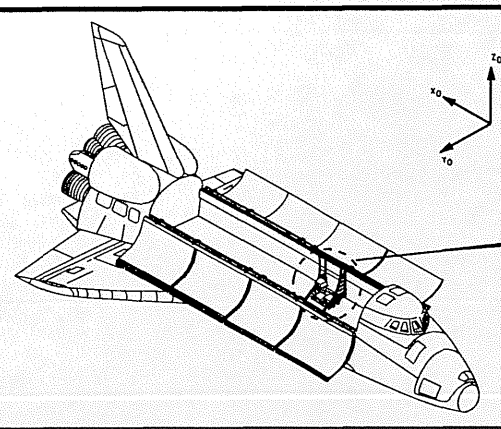

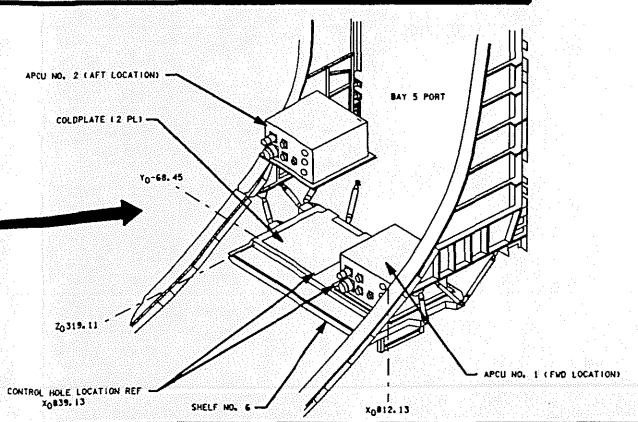

7 APCU

SIGNATURE	DATE	NATIONAL AERONAUTICS AND SPACE ADMINISTRATION LYNDON B. JOHNSON SPACE CENTER HOUSTON, TEXAS	
DSGN V. HUNTER	8-9-96		
DR			
ENGR M. MAHER		ASSEMBLY POWER CONVERTER UNIT (APCU)	
ENGR			
APP			
APP		SPACE SHUTTLE	DWG NO 2.7
CHK C.P. KNIGHT 8/16/96		ALL	
LTR E PCN 6		126.5 X 34	PAGE SHEET 1 OF 1

BASIC REV E-6

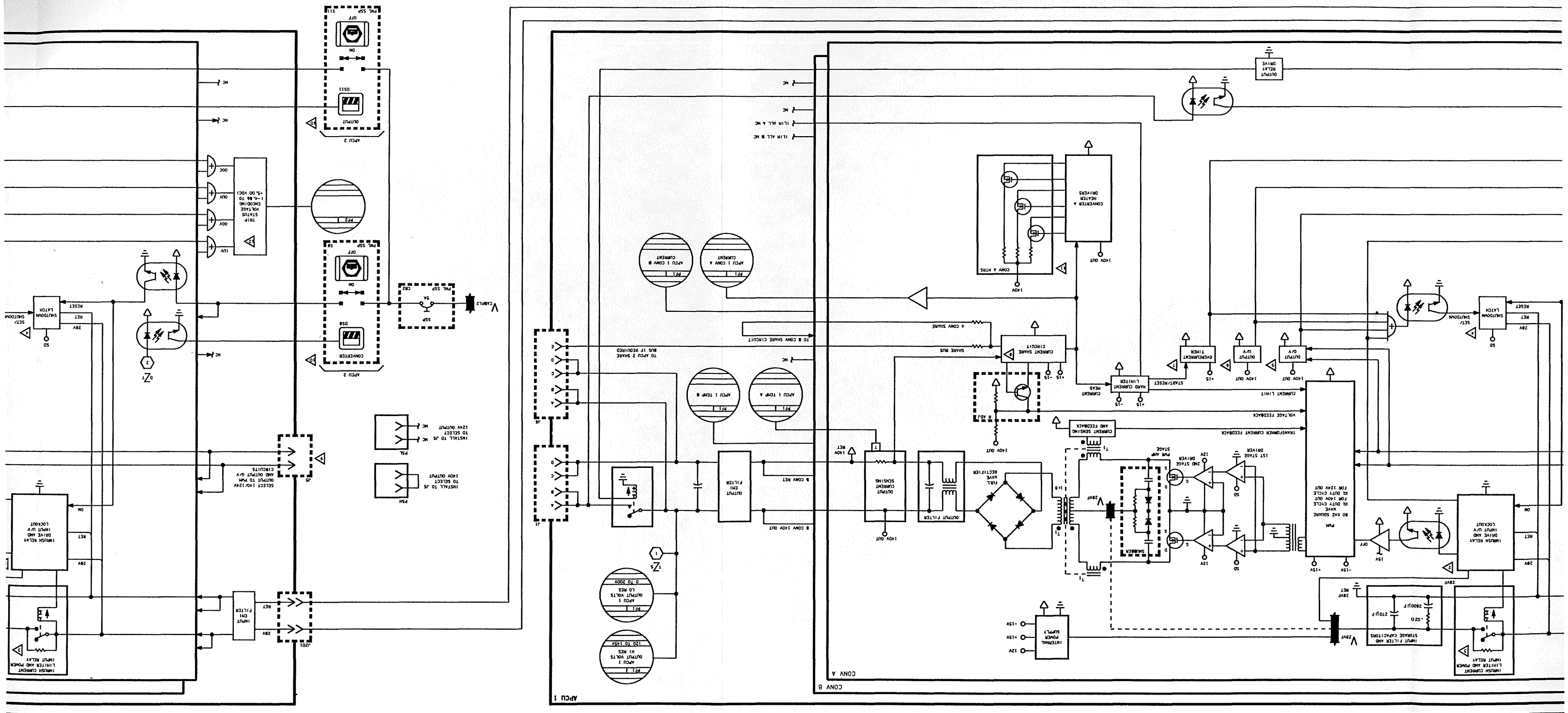
APCU 1
APCU 2
CONV A
CONV B
CONVERTER A HEATER DRIVERS
CONVERTER HEATER DRIVERS
OUTPUT RELAY DRIVE
INRUSH RELAY DRIVE AND INPUT U/V LOCKOUT
INRUSH CURRENT LIMITER AND POWER INPUT RELAY
INPUT FILTER AND STORAGE CAPACITORS
INTERNAL POWER SUPPLY
HARD CURRENT LIMITER
CURRENT SHARE CIRCUIT
OVERCURRENT TIMER
OUTPUT U/V
OUTPUT O/V
SHUTDOWN LATCH
TRIP STATUS VOLTAGE ENCODING (+4.86 TO +5.00 VDC)
OUTPUT FILTER
OUTPUT RECTIFIER
PWM AMP STAGE
1ST STAGE DRIVER
2ND STAGE DRIVER
PWM 80 KHZ SQUARE WAVE 3% DUTY CYCLE FOR 140V OUT 97% DUTY CYCLE FOR 12V OUT
CURRENT SENSING AND FEEDBACK
CURRENT LIMIT
VOLTAGE FEEDBACK
TRANSFORMER CURRENT FEEDBACK
A CONV SHARE
B CONV SHARE
SHARE BUS
TO B CONV SHARE CIRCUIT
TO APCU 2 SHARE BUS IF REQUIRED
APCU 1 CONV A CURRENT
APCU 1 CONV B CURRENT
APCU 1 TEMP A
APCU 1 TEMP B
APCU 1 OUTPUT VOLTS LO RES 0 TO 200V
APCU 1 OUTPUT VOLTS HI RES 120 TO 145V
INSTALL TO J5 TO SELECT 12V OUTPUT
INSTALL TO J5 TO SELECT 140V OUTPUT
SELECT 140V/12V OUTPUT TO PWM AND OUTPUT O/V CIRCUITS
ILIM ALL A NC
ILIM ALL B NC
OUTPUT
ON
OFF
PWL SSP
SSP
CONVERTER
OUTPUT
CONV A HTRS
140V OUT
12V OUT
-15V
+15V
28V
28VF
RET
NC
SHUTDOWN
RESET
LATCH
SET/
J1
J2
J3
J4
J5
J6
J7
J8
J9
J10
J11
J12
J13
J14
J15
J16
J17
J18
J19
J20
J21
J22
J23
J24
J25
J26
J27
J28
J29
J30
J31
J32
J33
J34
J35
J36
J37
J38
J39
J40

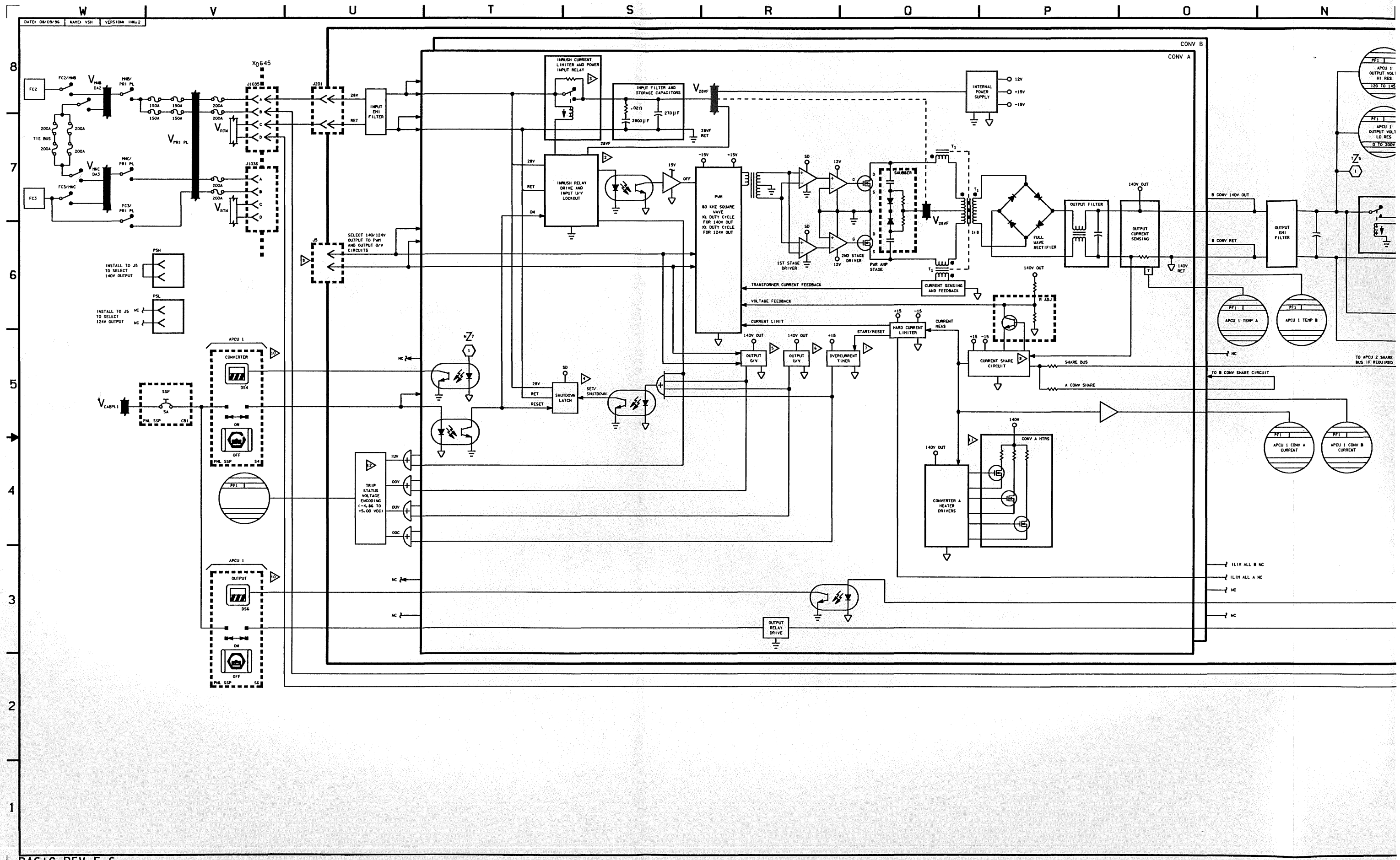

W
V
U
T
S
R
Q
P
O
N
8
7
6
5
4
3
2
1
CONV B
CONV A
INPUT EMI FILTER
INRUSH CURRENT LIMITER AND POWER INPUT RELAY
INPUT FILTER AND STORAGE CAPACITORS
INTERNAL POWER SUPPLY
INRUSH RELAY DRIVE AND INPUT U/V LOCKOUT
PWM
80 KHZ SQUARE WAVE
XX DUTY CYCLE FOR 140V OUT
XX DUTY CYCLE FOR 124V OUT
1ST STAGE DRIVER
2ND STAGE DRIVER
PWR AMP STAGE
SNUBBER
FULL WAVE RECTIFIER
OUTPUT FILTER
OUTPUT CURRENT SENSING
OUTPUT EMI FILTER
CURRENT SENSING AND FEEDBACK
TRANSFORMER CURRENT FEEDBACK
VOLTAGE FEEDBACK
CURRENT LIMIT
HARD CURRENT LIMITER
CURRENT HEAS
START/RESET
OVERCURRENT TIMER
OUTPUT O/V
OUTPUT U/V
CURRENT SHARE CIRCUIT
SHARE BUS
A CONV SHARE
TO B CONV SHARE CIRCUIT
TO APCU 2 SHARE BUS IF REQUIRED
SHUTDOWN LATCH
SET/SHUTDOWN
TRIP STATUS VOLTAGE ENCODING (-4.86 TO +5.00 VDC)
CONVERTER A HEATER DRIVERS
CONV A HTRS
OUTPUT RELAY DRIVE
APCU 1 TEMP A
APCU 1 TEMP B
APCU 1 CONV A CURRENT
APCU 1 CONV B CURRENT
APCU 1 OUTPUT VOLT HI RES
APCU 1 OUTPUT VOLT LO RES
B CONV 140V OUT
B CONV RET
ILIM ALL B NC
ILIM ALL A NC
INSTALL TO J5 TO SELECT 140V OUTPUT
INSTALL TO J5 TO SELECT 124V OUTPUT
SELECT 140/124V OUTPUT TO PWM AND OUTPUT O/V CIRCUITS
APCU 1 CONVERTER
APCU 1 OUTPUT

BASIC REV E-6

FOR DETAILED COMPONENT AND LOGIC INFORMATION REFER TO:

SSSH DWG NO.	SSSH DWG TITLE	VENDOR NAME	VENDOR DWG NO.	VENDOR SHEET NO.	REV	DATE	VENDOR DRAWING TITLE
2.1	EPS OV	R.I.	VS70-760322	1 - 14	E	11/21/88	MAIN DC POWER DIST SUBSYSTEM (OV-102)
		R. I.	VS70-760309	1-15	H	12/14/89	MAIN DC POWER DIST SUBSYSTEM
		R. I.	VS70-976099	ALL	A16	8/6/90	INTEGRATED SCHEMATIC - ELECTRICAL POWER DIST & CONTROL
		R. I.	VS70-976102	ALL	G19	9/14/90	INTEGRATED SCHEMATIC - ELECTRICAL POWER DIST & CONTROL (OV-102)
		R.I.	VS70-764345	5 OF 7	B	2/20/90	MID POWER CONTROL ASSEMBLY NO. 1
		R.I.	VS70-764355	5 OF 6	B	2/13/90	MID PWR CONTROL ASSEMBLY NO. 2, MID-FUSELAGE
2.2 (SHEET 1)	MAIN BUS DC DISTRIBUTION	R.I.	VS70-764345	5 OF 7	B	2/20/90	MID POWER CONTROL ASSEMBLY NO. 1
		R.I.	VS70-764355	5 OF 6	B	2/13/90	MID PWR CONTROL ASSEMBLY NO. 2, MID-FUSELAGE
		R.I.	VS70-953104	11 OF 55		5/13/94	INTEGRATED SCHEMATIC - ORBITER DOCKING SYSTEM (ODS), RUSSIAN MIR MISSION, OV-104
		R.I.	VS70-760309	1 - 14	H	12/14/89	MAIN DC POWER DISTRIBUTION SUBSYSTEM - OV-103, OV-104, OV-105
		R.I.	VS70-760322	1 - 14	E	11/21/88	MAIN DC POWER DISTRIBUTION SUBSYSTEM - OV-102
2.2 (SHEET 2)	MAIN BUS DC DISTRIBUTION	R.I.	VS70-760209	2 OF 3	D	11/13/84	COAS SEAT/SUIT CONTROLS CREW SYSTEMS - OV-103, OV-104, OV-105
		R.I.	VS70-760202	2 OF 3	G	1/14/83	COAS SEAT/SUIT CONTROLS CREW SYSTEMS - OV-102
		R.I.	VS70-760503	4 OF 14 5 OF 14 12 OF 14	D	11/10/89	EVCON SUBSYSTEM - OV-103, OV-104, OV-105
		R.I.	VS70-760502	4 OF 14 5 OF 14 12 OF 14	M	10/20/89	EVCON SUBSYSTEM - OV-102
		R.I.	VS70-710179	1 - 2	D	4/6/88	SOLID RKT BSTR RATE GYRO GDNC & NAV SUBSYSTEM - OV-103, OV-104, OV-105
		R.I.	VS70-710172	1 -2	G	5/18/87	SOLID RKT BSTR RATE GYRO GDNC & NAV SUBSYSTEM - OV-102
		R.I.	VS70-733619	1	B	10/31/89	SCHEMATIC DIAGRAM PANEL F9A2 MAIN DISPLAY CONSOLE
		R.I.	VS70-760809	20 OF 24	R	7/7/89	PAYLOAD SUBSYSTEM INTERFACE - ALL VEHICLE
2.2 (SHEET 3)	MAIN BUS DC DISTRIBUTION	JSC	SID39119180	1 OF 1	B	6/22/90	MID-DECK UTILITY PANEL
		R.I.	VS70-760202	2	G	1/14/83	COAS SEAT/SUIT CONTROL CREW SYSTEMS - OV-102
		R.I.	VS70-760209	2	D	11/13/84	COAS SEAT/SUIT CONTROLS CREW SYSTEMS - OV-103, OV-04, OV-105

DWG	SIGNATURE	DATE	DWG	SIGNATURE	DATE
2.1	ENGR J. AZBELL			ENGR	
	ENGR Jim Azbell	9/22/94		ENGR	
2.2-1	ENGR R. AL-AYOUBI			ENGR	
	ENGR Rami Al-Ayoubi	9/22/94		ENGR	
2.2-2	ENGR R. AL-AYOUBI			APP Paul M Jay Cl	9/22/94
	ENGR Rami Al-Ayoubi	9/22/94		APP	
2.2-3	ENGR R. AL-AYOUBI			APP	
	ENGR Rami Al-Ayoubi	9/22/94		LTR E	PCN 4

NATIONAL AERONAUTICS AND SPACE ADMINISTRATION
LYNDON B. JOHNSON SPACE CENTER HOUSTON, TEXAS

VENDOR DRAWING REFERENCES

SPACE SHUTTLE | TBL NO 2-I
ALL | PAGE 2.I-1 | SHEET 1 OF 2

BASIC REV E-4

FOR DETAILED COMPONENT AND LOGIC INFORMATION REFER TO:

SSSH DWG NO.	SSSH DWG TITLE	VENDOR NAME	VENDOR DWG NO.	VENDOR SHEET NO.	REV	DATE	VENDOR DRAWING TITLE
2.3	AC GENERATION AND DISTRIBUTION	R. I.	VS70-760402	1-9	L	12/9/88	AC PWR DIST AND CONTROL - SUBSYSTEM
		R. I.	VS70-760409	1-9	D	1/19/89	AC PWR DIST AND CONTROL - SUBSYSTEM
		R.I.	VS70-760202	2	G	1/14/83	COAS, SEAT/SUIT CONTROLS CREW SYSTEMS OV-102
		R.I.	V070-760209	2	D	11/13/84	COAS, SEAT/SUIT CONTROLS CREW SYSTEMS OV-103, OV-104, OV-105
		WESTING-HOUSE ELECTRIC CORP.	947F480	—	A	10/22/75	INVERTER SCHEMATIC
		WESTING-HOUSE ELECTRIC CORP.	9009D37	—	A	10/22/75	CONTROL PWR SUPPLY AND ERC
		WESTING-HOUSE ELECTRIC CORP.	9009D36	—		4/8/75	CCFT STEERING CIRCUIT
		WESTING-HOUSE ELECTRIC CORP.	947F494	—		10/14/75	COMPARITOR SCHEMATIC
		WESTING-HOUSE ELECTRIC CORP.	947F493	—		10/27/75	SINE WAVE SCHEMATIC
2.4 (SHEETS 1-3)	MCA DISTRIBUTION	R.I..	VS70-540302	1 - 8	J	6/6/86	PAYLOAD BAY DOOR CONTS SUBSYSTEM
		R.I.	VS70-540309	1 - 8	E	6/6/86	PAYLOAD BAY DOOR CONTS SUBSYSTEM
		R.I.	VS70-760709	1 - 11	D	8/25/86	MOTOR CONTROL ASSY POWER DISTRIBUTION
		R.I.	VS70-760702	1 - 12	H	8/25/86	MOTOR CONTROL ASSY POWER DISTRIBUTION
		R.I.	VS70-590119	1 - 3	B	11/27/85	KU-BAND ANTENNA DEPLOYMENT
		R.I.	VS70-540304	1 - 5	C	10/28/87	PAYLOAD RETENTION SUBSYSTEM
2.5	PALLET EPDC/HEATERS	R. I.	ECN 105-0044	ALL	A4	1/23/90	PRSD MODS FOR THE 28-DAY MISSION EXTENSION KIT ON OV-105
		R. I.	VS70-945102	ALL	G	7/20/90	INTEGRATED SYSTEM SCHEMATIC ORBITER OV-102 EPS
		JSC	SCR90118	ALL	A	8/23/89	EDO SM MODIFICATIONS
2.6	ORBITER DOCKING SYSTEM/ POWER	R.I.	VS70-953104	1 - 10 OF 55		5/13/94	INTEGRATED SCHEMATIC - ORBITER DOCKING SYSTEM (ODS), RUSSIAN MIR MISSION, OV-104

DWG	SIGNATURE	DATE	DWG	SIGNATURE	DATE
2.3	ENGR J. AZBELL			ENGR	
	ENGR	9/22/94		ENGR	
2.4-1,2,3	ENGR C. B. GUDERIAN			ENGR	
	ENGR	9/22/94		ENGR	
2.5	ENGR L. MINTER			APP Paul M Joyce	9/22/94
	ENGR	9/22/94		APP	
2.6	ENGR R. ARMSTRONG			APP	
		9/22/94		LTR E PCN 4	

NATIONAL AERONAUTICS AND SPACE ADMINISTRATION
LYNDON B. JOHNSON SPACE CENTER HOUSTON, TEXAS

VENDOR DRAWING REFERENCES

SPACE SHUTTLE	TBL NO 2-I	
ALL	PAGE 2.I-2	SHEET 2 OF 2

BASIC REV E-4

DATE: 10/25/88	NAME: SEW	VERSION: INK7
DATE: 08/07/90	NAME: JMB	VERSION: BPT2
DATE: 09/19/90	NAME: MAC	VERSION: INK8

FUEL CELL 3
FUEL CELL 2
FUEL CELL 1

100 TO 120 PSIA
100 TO 120 PSIA
CRACK 69 PSIA
CRACK 67 PSIA
60 TO 62 PSIA
59 TO 60 PSIA
INTEGRATED DUAL GAS REGULATOR MODULE
AL FLOW CONTROL/ PURGE VALVE
H_2 PURGE VALVE NC
"FC STACK"
H_2
H_2O CONDENSATE TRAP
FC H_2 PUMP MOTOR STATUS
H_2 PUMP
PUMP RIM ASPIRATOR SUCTION LINE
C FC CURRENT
V FC VOLTS
H_2O SEPARATOR
X FC1 PH STATUS

H_2O PRODUCTION
1.6 LB/HR AT 2 KW
5.7 LB/HR AT 7 KW
9.8 LB/HR AT 12 KW

POWER OUTPUT CONSTRAINTS
2 TO 7 KW CONTINUOUS
10 KW FOR 1 HR
12 KW FOR 15 MIN
(EVERY 3 HOURS)
16 KW FOR 15 MIN MAX
(CONTINGENCY)

FC O_2 PURGE LINE T
O_2 PURGE HTRS
QPC
MAN
O_2 OVBD PURGE VENT X_O = 640.9 Y = PORT

FC H_2 VENT LINE T1
H_2 PURGE HTRS
QPC
FC H_2 VENT LINE T2
MAN
H_2 OVBD PURGE VENT X_O = 640.9 Y = STBD

H_2O RELIEF VALVE PANEL
FC3 H_2O VENT VLV HTRS
FC2 H_2O VENT VLV HTRS
FC1 H_2O VENT VLV HTRS
FC3 H_2O RLF VLV T
FC2 H_2O RLF VLV T
FC1 H_2O RLF VLV T
FC1 H_2O LINE HTRS
FC1 PROD H_2O LINE T
FC2 H_2O LINE HTRS
FC2 PROD H_2O LINE T
FC3 H_2O LINE HTRS
FC3 PROD H_2O LINE T
H_2O LINE PN STATUS

H_2O VENT LINE HTR B
H_2O VENT BARREL HTR B
H_2O VENT NOZZLE HTR B
FC H_2O RLF NOZZLE T B
H_2O OVBD RLF VENT X_O = 631.1 Y = STBD
H_2O VENT LINE HTR A
H_2O VENT BARREL HTR A
H_2O VENT NOZZLE HTR A
FC H_2O RLF LINE T
FC H_2O RLF NOZZLE T A

FC3 FC ALT H_2O RELIEF
576 BULKHEAD
TO VACUUM VENT
GSE FILL X_O = 463.0 Y = PORT
CRACK 1.5 PSID
H_2 SEPARATOR
H_2 SEPARATOR
GALLEY POT H_2O SUPPLY OPEN
SUPPLY H_2O INLET PRESS
TK B INLET VLV OPEN
CRACK 1.5 PSID
TK D INLET VLV OPEN
TO POTABLE H_2O DISPENSING PANEL
TK A INLET VLV OPEN
TK B QTY
TK B OUTLET VLV OPEN
TK C INLET VLV OPEN
TK D QTY
TK D OUTLET VLV OPEN
N_2
TK A QTY
TK A OUTLET VLV OPEN
TK C QTY
TK C OUTLET VLV OPEN
SUPPLY H_2O XOVR VLV POS
GSE DRAIN X_O = 463.0 Y = PORT
TO FLASH EVAPORATOR SYSTEM B WATER SUPPLY
SUPPLY B ISOL VLV POS
TO FLASH EVAPORATOR SYSTEM A WATER SUPPPLY
TO AIRLOCK
POT DUMP LINE HTRS
POT DUMP LINE T Z38
SUPPLY WATER DUMP NOZZLE HTRS
H_2O DUMP NOZ TEMP A
POT H_2O DUMP NOZZLE X_O = 620.0 Y = PORT
SUP H_2O DUMP ISOL VLV POS
POT H_2O DUMP VLV POS
H_2O DUMP NOZ TEMP B
CONTINGENCY H_2O CROSS-TIE

FC1, FC2, FC3 ALT H_2O LINE TEMP
OPEN 6-8 PSID
FC ALT H_2O LINE PRESS
TO ECLSS TK B Z5

POTABLE H_2O TANKS
168.3 LB CAPACITY PER TANK
3.3 LB RESIDUAL
MAX FLOW 150 LB/HR FROM EACH TANK

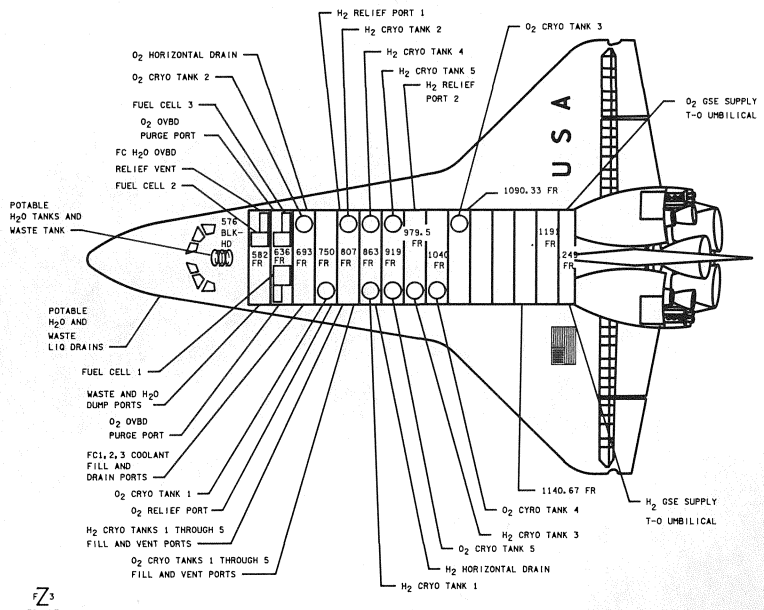

11. SEE TABLE 3-1 FOR VENDOR DRAWING REFERENCES

NOTES:
1. SEE DRAWING 3.2 FOR DETAILS
2. SEE DRAWING 3.3 FOR DETAILS
3. SEE DRAWING 3.4 FOR DETAILS
4. SEE DRAWING 6.4 FOR DETAILS
5. H_2O VENT NOZZLE HTR A DISCONNECTED
6. 5μ NOMINAL 12μ ABSOLUTE
7. CRACK 10005 PSIG RESEAT 980 PSIG
8. CRACK 975 PSIG RESEAT 950 PSIG
9. CRACK 302 PSIG RESEAT 290 PSIG
10. CRACK 290 PSIG RESEAT 285 PSIG

* 1 FC/REAC

SIGNATURE		DATE	NATIONAL AERONAUTICS AND SPACE ADMINISTRATION LYNDON B. JOHNSON SPACE CENTER HOUSTON, TEXAS
DSGN VICKI DOGGETT		8/2/79	
DR			FUEL CELL/REACTANT STORAGE OVERVIEW
ENGR S.R. HIRSHORN			
ENGR		10/5/90	
APP		10/5/90	
APP			SPACE SHUTTLE
OMNIPLAN			ALL
LTR E	PCN		126.5 X 34

DWG NO 3.1
PAGE ✔ SHEET 1 OF 2

BASIC REV E

POWER OUTPUT CONSTRAINTS
2 TO 7 KW CONTINUOUS
10 KW FOR 1 HR
12 KW FOR 15 MIN MAX
16 KW FOR 3 HOURS
(EVERY 3 HOURS)
(CONTINGENCY)

INTEGRATED DUAL GAS REGULATOR MODULE

O_2 PRESS
H_2 PRESS
O_2 FLOW
H_2 FLOW
O_2 PURGE VALVE
DUAL FLOW CONTROL
60 TO 62 PSIA
59 TO 60 PSIA
100 TO 120 PSIA
CRACK 69 PSIA
15A
O_2 TANK
H_2 TANK
O_2 VENT
H_2 VENT
O_2 FILL TK
H_2 FILL TK
O_2 TK 1 P
O_2 TK 2 P
O_2 TK 3 P
O_2 TK 4 P
H_2 TK 1 P
H_2 TK 2 P
H_2 TK 3 P
H_2 TK 4 P
O_2 TK 1 HTR ASSY 1 T
O_2 TK 2 HTR ASSY 1 T
O_2 TK 3 HTR ASSY 2T
H_2 TK 1 HTR ASSY 1 T
H_2 TK 2 HTR ASSY 1 T
H_2 TK 3 HTR ASSY 2T
H_2 TK 4 HTR ASSY T
O_2 TK 1 HTR CNTR P
O_2 TK 2 HTR CNTR P
O_2 TK 3 HTR CNTR P
O_2 TK 4 HTR CNTR P
H_2 TK 1 HTR CNTR P
H_2 TK 2 HTR CNTR P
H_2 TK 3 HTR CNTR P
H_2 TK 4 HTR CNTR P
O_2 TK 3 QTY
H_2 TK 4 QTY
O_2 TK 3 FLUID T
H_2 TK 4 FLUID T
O_2 TK 3 P
H_2 TK 4 P
O_2 TK 3 QTY
H_2 TK 4 QTY
TANK 1&2 PRESS 803 TO 854 PSIA
TANK 3&4 PRESS 832 TO 883 PSIA
TANK 1&2 PRESS 200 TO 226 PSIA
TANK 3&4 PRESS 217 TO 243 PSIA
RELIEF VALVE/FILTER PACKAGE
ADDED TO OV102 AND OV105
REMOVED FROM OV102 AND OV105
FROM O_2 TK5
FROM H_2 TK5
O_2 RELIEF PORT 1 X_0 = 822.2 Y = STBD
O_2 RELIEF PORT 2 X_0 = 990.0 Y = STBD
H_2 RELIEF PORT 1 X_0 = 760.0 Y = PORT
H_2 RELIEF PORT 2 X_0 = 905.0 Y = PORT
O_2 VALVE MODULE 1
O_2 VALVE MODULE 2
H_2 VALVE MODULE 1
H_2 VALVE MODULE 2
FC1 O_2 REAC VLV OPEN
FC2 O_2 REAC VLV OPEN
FC3 O_2 REAC VLV OPEN
FC4 O_2 REAC VLV OPEN
FC1 H_2 REAC VLV OPEN
FC2 H_2 REAC VLV OPEN
FC3 H_2 REAC VLV OPEN
FC4 H_2 REAC VLV OPEN
O_2 MNF 1 VLV OPEN
O_2 MNF 2 VLV OPEN
H_2 MNF 1 VLV OPEN
H_2 MNF 2 VLV OPEN
O_2 ECLSS 1 SPLY VLV OPEN
O_2 ECLSS 2 SPLY VLV OPEN
O_2 GSE SUPPLY T-0 UMBILICAL X_0 = 1305 Y = STBD
H_2 GSE SUPPLY T-0 UMBILICAL X_0 = 1305 Y = PORT
O_2 HORIZONTAL DRAIN X_0 = 743.0 Y = STBD
H_2 HORIZONTAL DRAIN X_0 = 905.0 Y = PORT
TO ECLSS
(GROUND ONLY)
O_2 MNF 2 P
H_2 MNF 2 P
O_2 MNF 1 P
H_2 MNF 1 P
O_2 REMOVED FROM OV102 AND OV105
H_2 REMOVED FROM OV102 AND OV105
ADDED TO OV102 AND OV105
ADDED TO OV105
O_2 TANK 3
H_2 TANK 4
O_2 TANK 2
H_2 TANK 2
O_2 TANK 1
H_2 TANK 3
250W HEATERS
100W HEATERS
VAC-ION PUMP
(GROUND ONLY)
O_2 VENT TK 1
O_2 VENT TK 2
O_2 VENT TK 3
H_2 VENT TK 1
H_2 VENT TK 2
H_2 VENT TK 3
O_2 FILL TK3
H_2 FILL TK 4
O_2 TK 3 QTY
H_2 TK 4 QTY
O_2 TK 3 FLUID T
H_2 TK 4 FLUID T
O_2 TK 3 HTR ASSY 2T
H_2 TK 4 HTR ASSY T
O_2 TK 1 P
O_2 TK 2 P
O_2 TK 3 P
O_2 TK 4 P
H_2 TK 1 P
H_2 TK 2 P
H_2 TK 3 P
H_2 TK 4 P
O_2 TK 1 HTR ASSY 1 T
O_2 TK 2 HTR ASSY 1 T
O_2 TK 3 HTR ASSY 2T
H_2 TK 1 HTR ASSY 1 T
H_2 TK 2 HTR ASSY 1 T
H_2 TK 3 HTR ASSY 2T
H_2 TK 4 HTR ASSY T
O_2 TK 1 HTR CNTR P
O_2 TK 2 HTR CNTR P
O_2 TK 3 HTR CNTR P
O_2 TK 4 HTR CNTR P
H_2 TK 1 HTR CNTR P
H_2 TK 2 HTR CNTR P
H_2 TK 3 HTR CNTR P
H_2 TK 4 HTR CNTR P
O_2 TK 3 QTY
H_2 TK 4 QTY
O_2 TK 3 FLUID T
H_2 TK 4 FLUID T
O_2 TK 3 P
H_2 TK 4 P
O_2 TK 3 QTY
H_2 TK 4 QTY
(GROUND ONLY)
O_2 VENT TK 1
O_2 VENT TK 2
O_2 VENT TK 3
H_2 VENT TK 1
H_2 VENT TK 2
H_2 VENT TK 3
O_2 FILL TK3
H_2 FILL TK 4
O_2 TK 3 QTY
H_2 TK 4 QTY
O_2 TK 3 FLUID T
H_2 TK 4 FLUID T
O_2 TK 3 P
H_2 TK 4 P
O_2 TK 3 QTY
H_2 TK 4 QTY
O_2 TK 1 HTR ASSY 1 T
O_2 TK 2 HTR ASSY 1 T
O_2 TK 3 HTR ASSY 2T
H_2 TK 1 HTR ASSY 1 T
H_2 TK 2 HTR ASSY 1 T
H_2 TK 3 HTR ASSY 2T
H_2 TK 4 HTR ASSY T
O_2 TK 1 HTR CNTR P
O_2 TK 2 HTR CNTR P
O_2 TK 3 HTR CNTR P
O_2 TK 4 HTR CNTR P
H_2 TK 1 HTR CNTR P
H_2 TK 2 HTR CNTR P
H_2 TK 3 HTR CNTR P
H_2 TK 4 HTR CNTR P
O_2 TK 3 QTY
H_2 TK 4 QTY
O_2 TK 3 FLUID T
H_2 TK 4 FLUID T
O_2 TK 3 P
H_2 TK 4 P
O_2 TK 3 QTY
H_2 TK 4 QTY
(GROUND ONLY)
O_2 VENT TK 1
O_2 VENT TK 2
O_2 VENT TK 3
H_2 VENT TK 1
H_2 VENT TK 2
H_2 VENT TK 3
O_2 FILL TK3
H_2 FILL TK 4

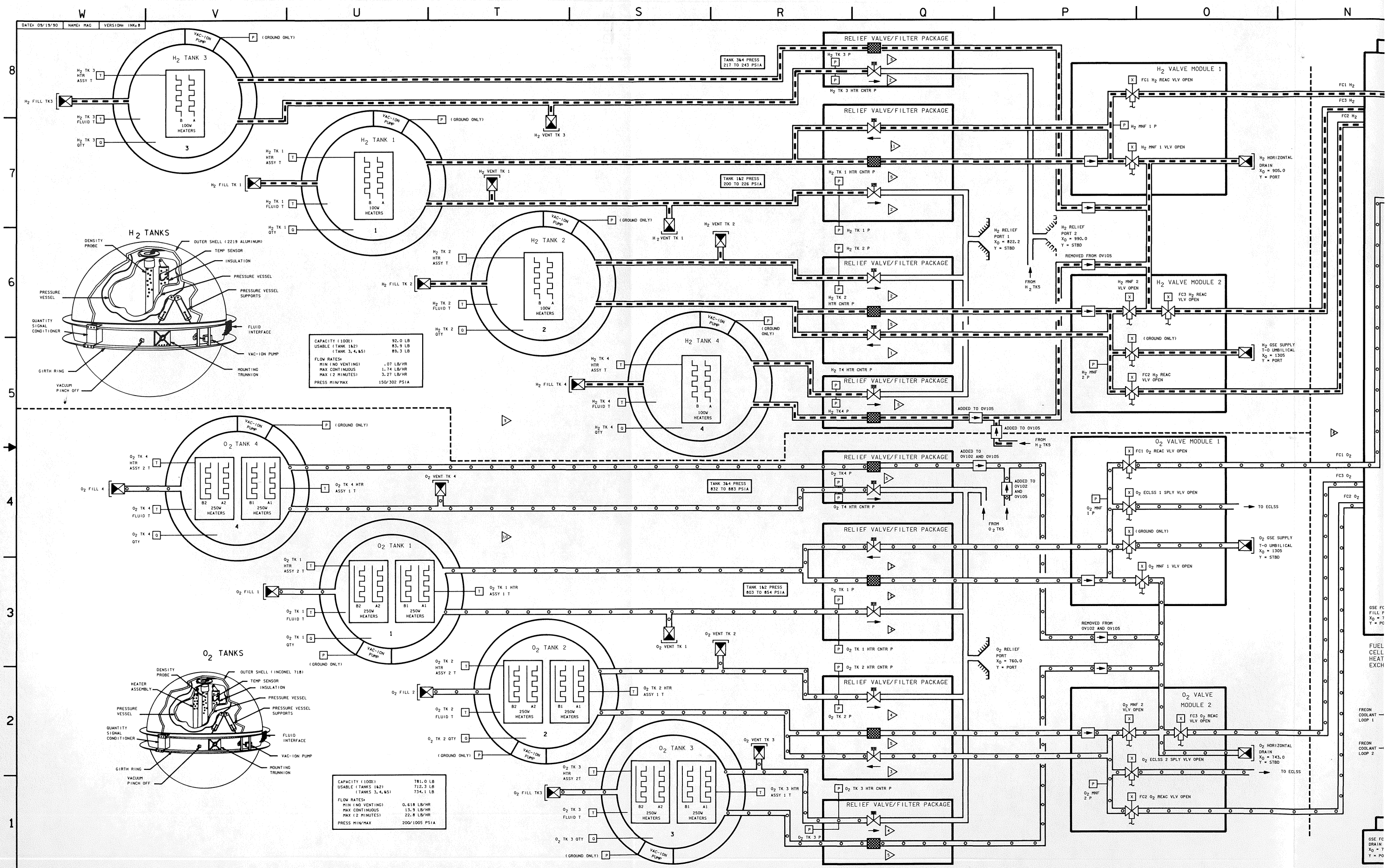

DATE: 09/19/90
NAME: MAG
VERSION: INK: 8
H2 TANK 3
H2 TANK 1
H2 TANK 2
H2 TANK 4
O2 TANK 4
O2 TANK 1
O2 TANK 2
O2 TANK 3
H2 TANKS
O2 TANKS
RELIEF VALVE/FILTER PACKAGE
H2 VALVE MODULE 1
H2 VALVE MODULE 2
O2 VALVE MODULE 1
O2 VALVE MODULE 2
TANK 3&4 PRESS 217 TO 243 PSIA
TANK 1&2 PRESS 200 TO 226 PSIA
TANK 3&4 PRESS 832 TO 883 PSIA
TANK 1&2 PRESS 803 TO 854 PSIA
CAPACITY (100%) 92.0 LB
USABLE (TANK 1&2) 83.9 LB
(TANK 3,4,&5) 89.3 LB
FLOW RATES:
MIN (NO VENTING) .07 LB/HR
MAX CONTINUOUS 1.74 LB/HR
MAX (2 MINUTES) 3.27 LB/HR
PRESS MIN/MAX 150/302 PSIA
CAPACITY (100%) 781.0 LB
USABLE (TANKS 1&2) 712.3 LB
(TANKS 3,4,&5) 734.1 LB
FLOW RATES:
MIN (NO VENTING) 0.618 LB/HR
MAX CONTINUOUS 13.9 LB/HR
MAX (2 MINUTES) 22.8 LB/HR
PRESS MIN/MAX 200/1005 PSIA

BASIC REV E

DATE: 10/05/90	NAME: MAG	VERSION: INR: 1
DATE: 02/15/96	NAME: BJB	VERSION: BPT: 2
DATE: 07/15/96	NAME: LAM	VERSION: INR: 2

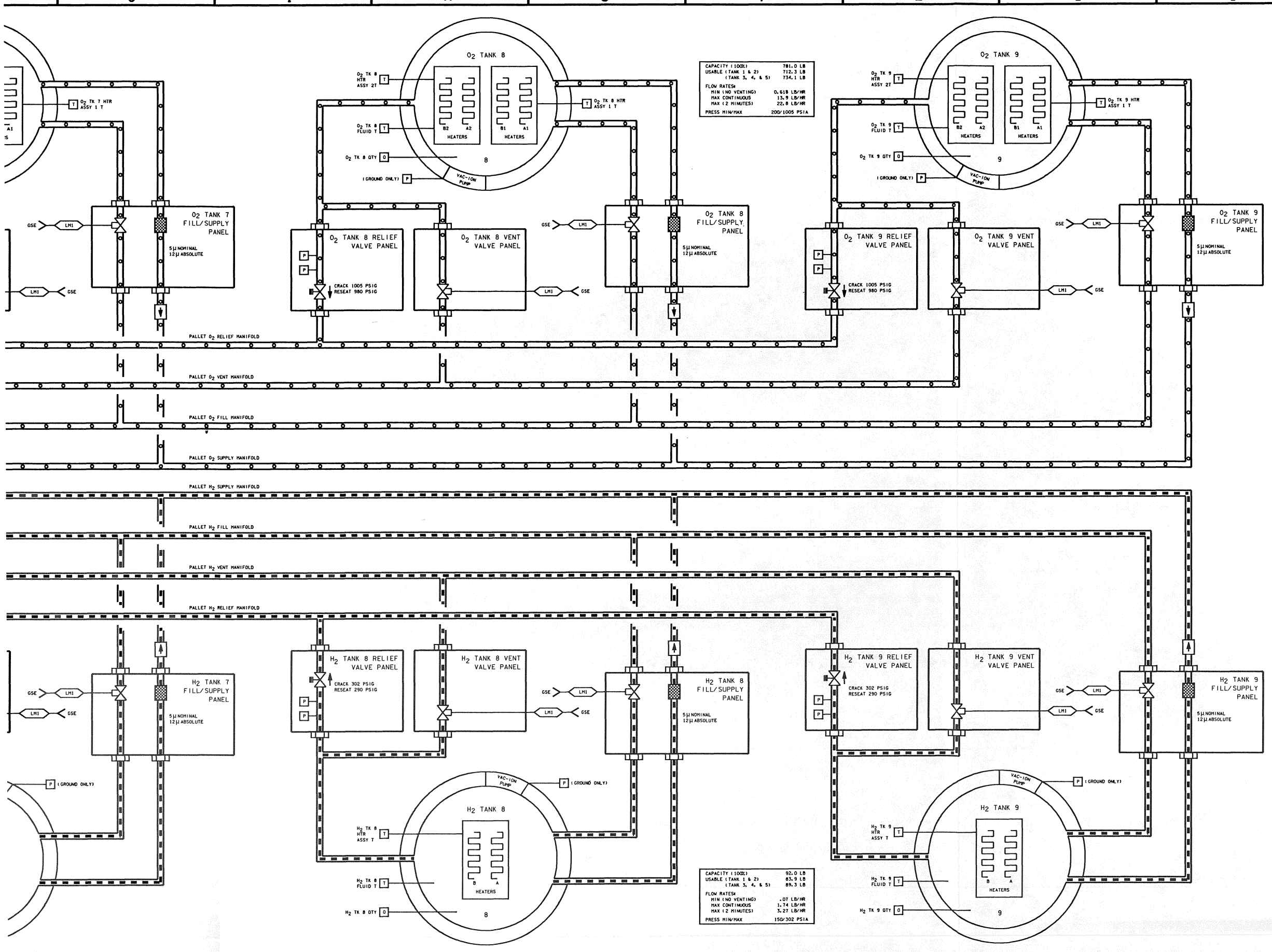

NOTES:
2. REFER TO TABLE 3-1 FOR DRAWING REFERENCES
▷ FOR FLIGHTS WITHOUT AN EDO PALLET, THESE LINES WILL BE CAPPED

PAL REAC STOR O/V 2

SIGNATURE	DATE	
DSGN J. M. BLANCHARD	08/14/90	NATIONAL AERONAUTICS AND SPACE ADMINISTRATION LYNDON B. JOHNSON SPACE CENTER HOUSTON, TEXAS
DR		
ENGR D. J. FUESTING		PALLET REACTANT STORAGE OVERVIEW
ENGR	7/15/96	
APP	7/15/96	
APP	7/15/96	SPACE SHUTTLE — DWG NO 3.1
CADS S. A. Kimbrell	7-23-96	EDOV OV102, OV104, OV105
LTR E PCN 6		126.5 X 34 — PAGE — SHEET 2 OF 2

BASIC REV E-6

T S R Q P O N M L K J

ORBITER I/F | PALLET I/F

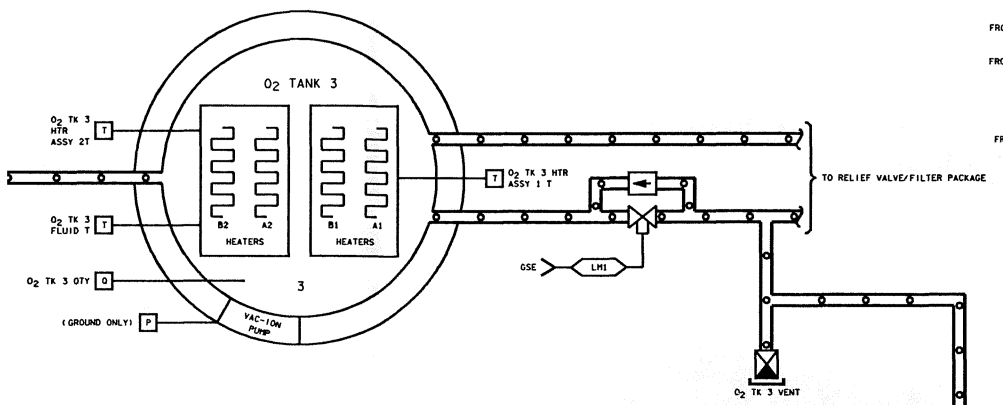

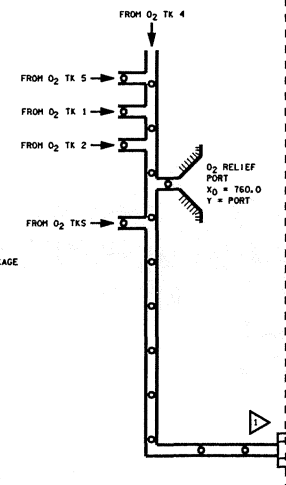

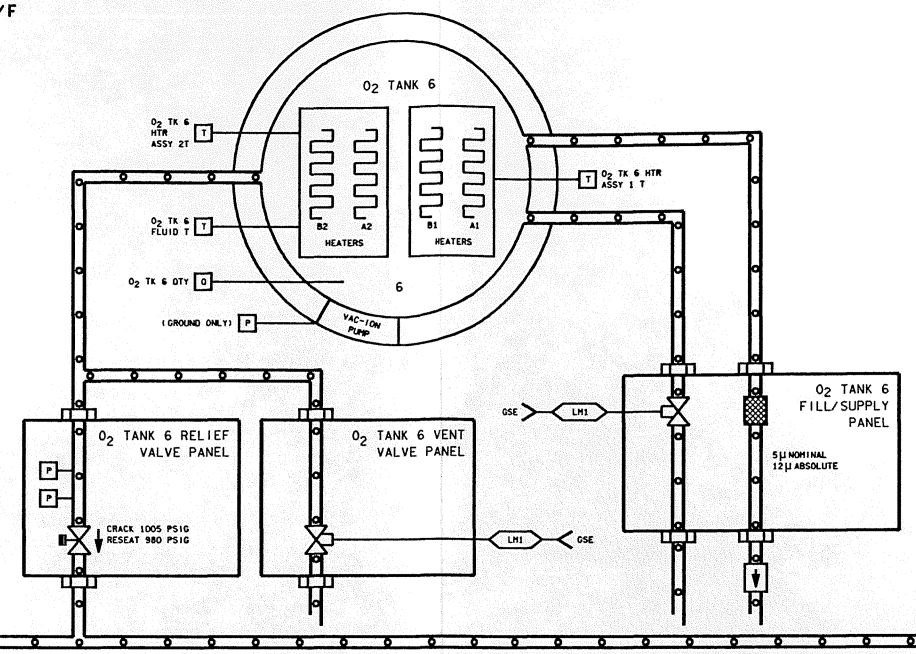

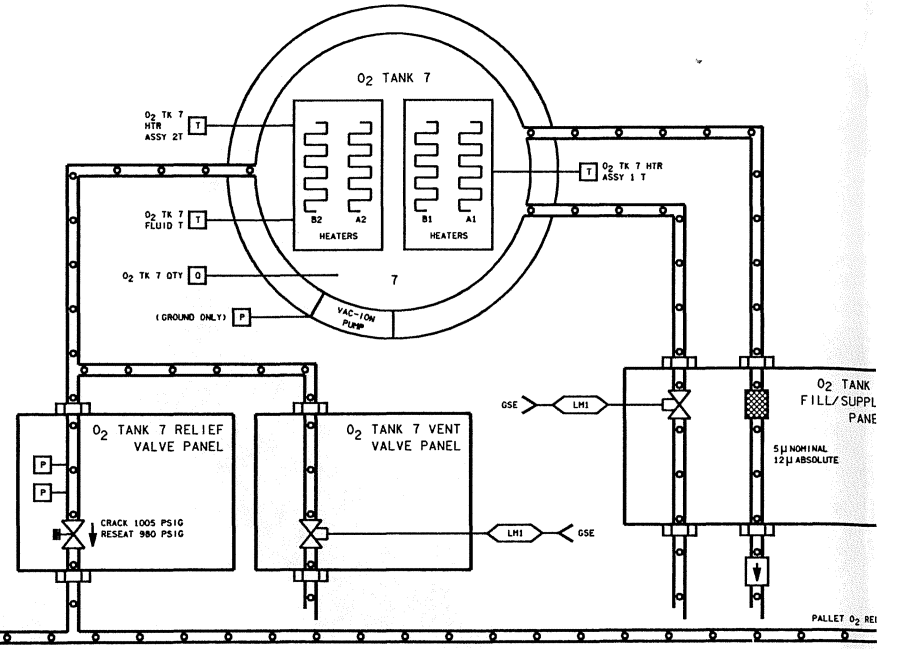

PALLET O_2 REL
PALLET O_2 VE
PALLET O_2 FIL
PALLET O_2 SUP
PALLET H_2 SUP
PALLET H_2 FIL
PALLET H_2 VE
PALLET H_2 REL

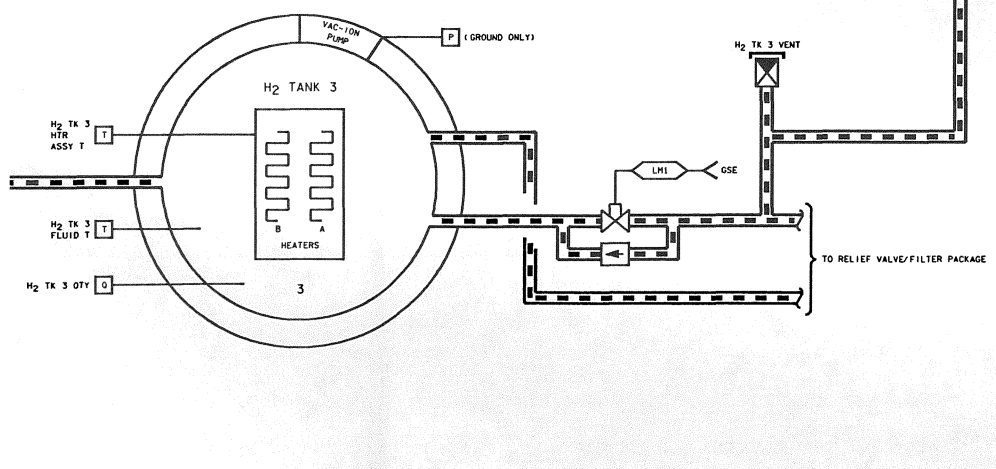

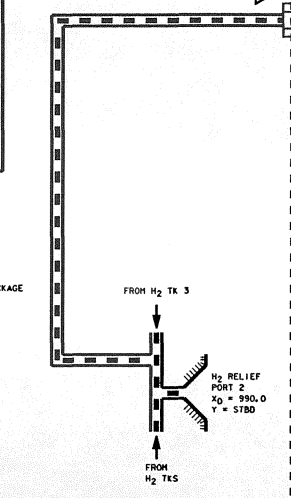

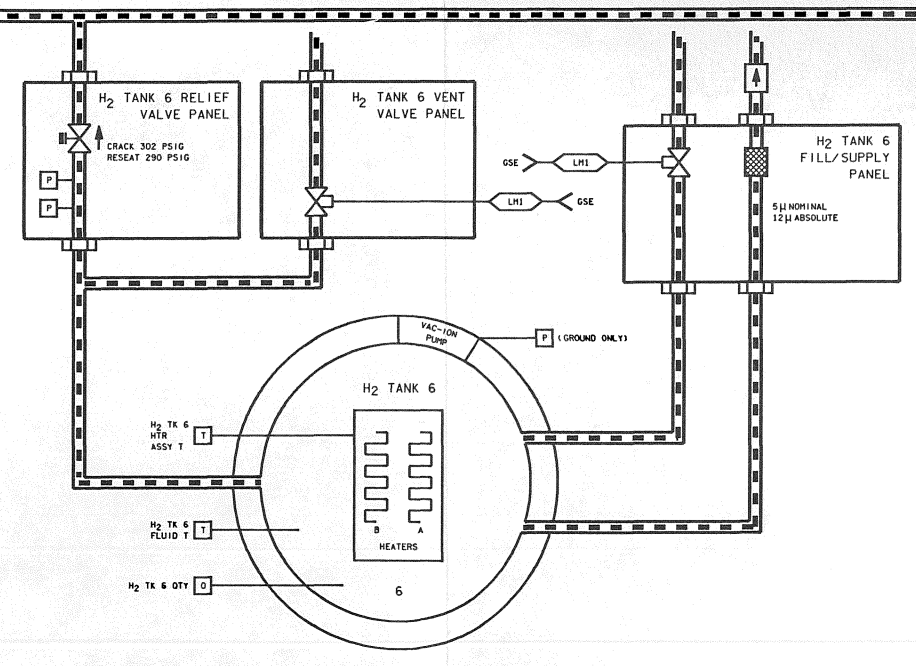

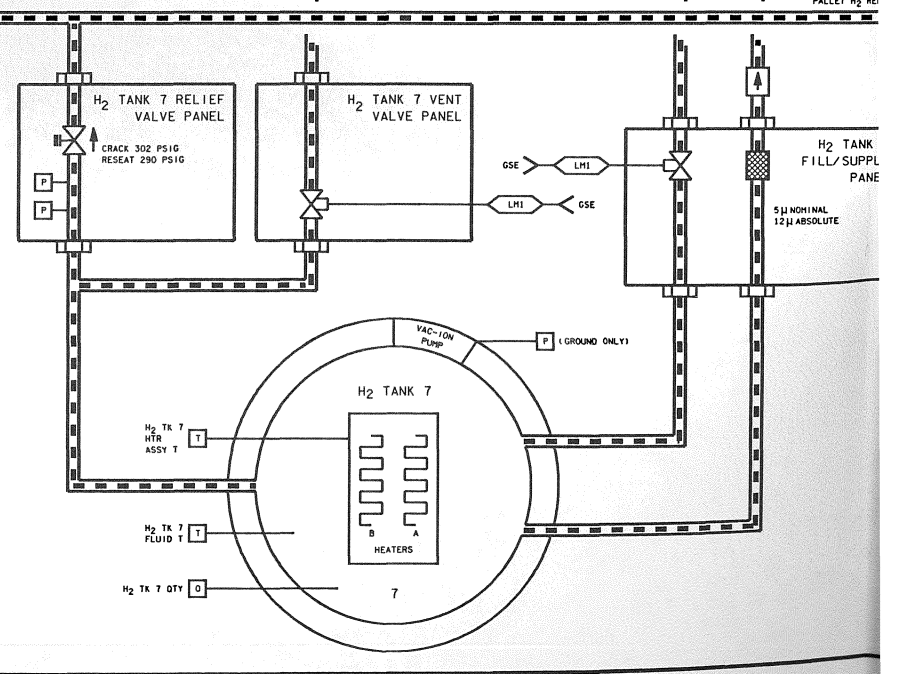

DATE: 07/15/96 | NAME: LAM | VERSION: INK 2

W V U T S R Q P O N

8 7 6 5 4 3 2 1

ORBITER I/F

PALLET I/F

O_2 MNF 1 VLV OPEN

TO O_2 MANIFOLD 1

FROM O_2 TK 4 & 5

FROM O_2 TK 3

O_2 MNF 2 VLV OPEN

TO O_2 MANIFOLD 2

TO FC3

O_2 HORIZONTAL DRAIN X_o = 743.0 Y = STBD

H_2 MNF 1 VLV OPEN

TO H_2 MANIFOLD 1

H_2 HORIZONTAL DRAIN X_o = 905.0 Y = PORT

FROM H_2 TK 4 & 5

FROM H_2 TK 3

H_2 MNF 2 VLV OPEN

TO H_2 MANIFOLD 2

TO FC 3

O_2 FILL TK 3

GSE

LM1

O_2 TANK 3

O_2 TK 3 HTR ASSY 2T

O_2 TK 3 FLUID T

O_2 TK 3 QTY

(GROUND ONLY)

VAC-ION PUMP

B2 A2 B1 A1 HEATERS

3

O_2 TK 3 HTR ASSY 1 T

TO RELIEF VALVE/FILTER PACKAGE

O_2 TK 3 VENT

FROM O_2 TK 4

FROM O_2 TK 5

FROM O_2 TK 1

FROM O_2 TK 2

FROM O_2 TK5

O_2 RELIEF PORT X_o = 760.0 Y = PORT

O_2 TANK 6

O_2 TK 6 HTR ASSY 2T

O_2 TK 6 FLUID T

O_2 TK 6 QTY

O_2 TK 6 HTR ASSY 1 T

B2 A2 B1 A1 HEATERS

6

O_2 TANK 6 RELIEF VALVE PANEL

CRACK 1005 PSIG RESEAT 980 PSIG

O_2 TANK 6 VENT VALVE PANEL

H_2 FILL TK 3

H_2 TANK 3

H_2 TK 3 HTR ASSY T

H_2 TK 3 FLUID T

H_2 TK 3 QTY

B A HEATERS

3

H_2 TK 3 VENT

TO RELIEF VALVE/FILTER PACKAGE

FROM H_2 TK 3

H_2 RELIEF PORT 2 X_o = 990.0 Y = STBD

FROM H_2 TK5

H_2 TANK 6 RELIEF VALVE PANEL

CRACK 302 PSIG RESEAT 290 PSIG

H_2 TANK 6 VENT VALVE PANEL

H_2 TANK 6

H_2 TK 6 HTR ASSY T

H_2 TK 6 FLUID T

H_2 TK 6 QTY

B A HEATERS

6

BASIC REV E-6

DATE: 10/16/91	NAME: PSD	VERSION: BPT: 19
DATE: 10/25/91	NAME: LAM	VERSION: INK: 5
DATE: 11/6/91	NAME: VSH	VERSION: INK: 6

ORBITER PRSD SYSTEM SURFACE PENETRATIONS

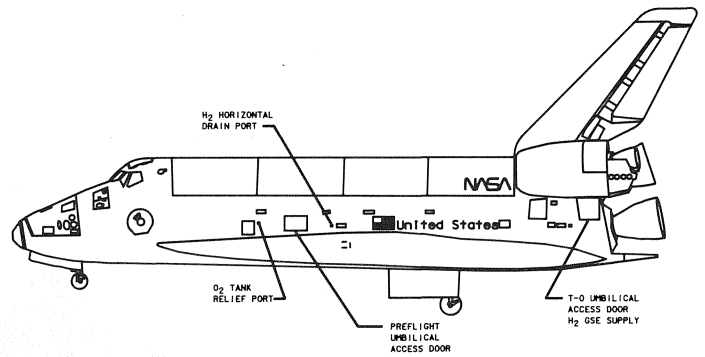

LEFT SIDE VIEW

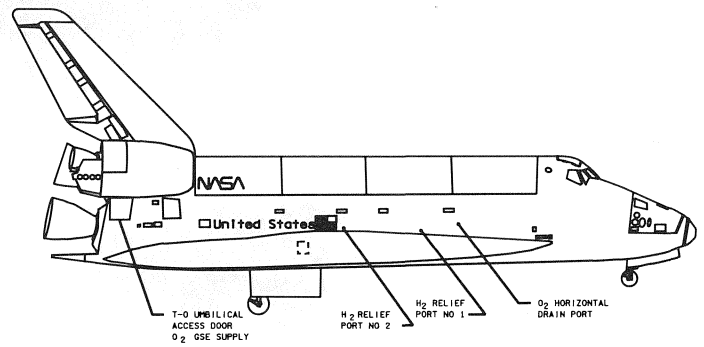

RIGHT SIDE VIEW

5. TYPE I

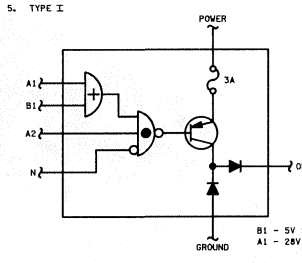

B1 - 5V SOURCE
A1 - 28V SOURCE

TYPE III

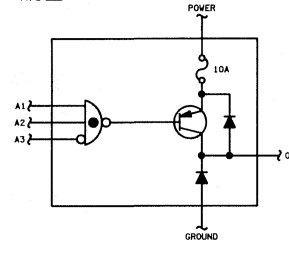

NOTES:
3. REFER TO TABLE 3-I FOR DRAWING REFERENCES
▷ NOT USED
▷ OV 105 ONLY
▷ ALL FILL PORTS AND FILL VENTS ARE LOCATED BEHIND THE PREFLIGHT UMBILICAL ACCESS DOOR

DRAWING APPLICABILITY MATRIX

NO OF TK'S	2	3	4	5
DWG 3.2, SHEET 1	X	X	X	X
DWG 3.2, SHEET 2			X	
DWG 3.2, SHEET 3		X		
DWG 3.2, SHEET 4				X
DWG 3.2, SHEET 5				X

*2 O_2 CRYO 1

SIGNATURE		DATE	
DSGN	V. S. DOGGETT	12/20/78	NATIONAL AERONAUTICS AND SPACE ADMINISTRATION LYNDON B. JOHNSON SPACE CENTER HOUSTON, TEXAS
DR	V. S. DOGGETT	12/20/78	
ENGR	S. R. HIRSWORK		O_2 REACTANT STORAGE TANKS 1 & 2
ENGR		11/13/91	
APP		11/13/91	
APP			SPACE SHUTTLE — DWG NO 3.2
OMNIPLAN	S. R. Hirswork	11-4-91	ALL
LTR E	PCN 1		126.5 X 34 — PAGE — SHEET 1 OF 7

BASIC REV E-1

S R Q P O N M L K J

CURRENT LEVEL DETECTORS

HTRA1 (+)
HTRA2 (+)
1.5A (DURING TEST)
HTRB1 (+)
HTRB2 (+)

2A 1A 2B 1B

V45 X1106E — O_2 TANK 1 HEATER A1-ON — 1=ON — 1 S/S — F7 3A
V45 X1111E — O_2 TANK 1 HEATER A2-ON — 1=ON — 1 S/S — F8 3A
V45 X1109E — O_2 TANK 1 HEATER B1-ON — 1=ON — 1 S/S — F9 3A
V45 X1113E — O_2 TANK 1 HEATER B2-ON — 1=ON — 1 S/S — F10 3A

V45 X1206E — O_2 TANK 2 HEATER A1-ON — 1=ON — 1 S/S — F7 3A
V45 X1211E — O_2 TANK 2 HEATER A2-ON — 1=ON — 1 S/S — F8 3A
V45 X1209E — O_2 TANK 2 HEATER B1-ON — 1=ON — 1 S/S — F9 3A
V45 X1213E — O_2 TANK 2 HEATER B2-ON — 1=ON — 1 S/S — F10 3A

V45 X1186E — O_2 TK 1 HTR 2A CUR TRIP — 1=TRIP — 1 S/S — F — 5.1K
V45 X1185E — O_2 TK 1 HTR 1A CUR TRIP — 1=TRIP — 1 S/S — F — 5.1K
V45 X1188E — O_2 TK 1 HTR 2B CUR TRIP — 1=TRIP — 1 S/S — F — 5.1K
V45 X1187E — O_2 TK 1 HTR 1B CUR TRIP — 1=TRIP — 1 S/S — F — 5.1K
V45 X1286E — O_2 TK 2 HTR 2A CUR TRIP — 1=TRIP — 1 S/S — F — 5.1K
V45 X1285E — O_2 TK 2 HTR 1A CUR TRIP — 1=TRIP — 1 S/S — F — 5.1K
V45 X1288E — O_2 TK 2 HTR 2B CUR TRIP — 1=TRIP — 1 S/S — F — 5.1K
V45 X1287E — O_2 TK 2 HTR 1B CUR TRIP — 1=TRIP — 1 S/S — F — 5.1K

200Ω

AUTO2 AUTO1 — I 17 — PAIR1+CPC2 — CPC1 — I 16 — ENA1
AUTO 1 AUTO 2 — I 17 — PAIR2+CPC1 — CPC2 — I 16 — ENA2

V_{MNA} CRY01 — ON1A+ENA1 — ON1A+AUTO1A — TRIP2A — I 19 — RPC 12 10A (C)(P) — RPC 10 10A (C)(P)
V_{MNA} CRY01 — ON1A+ENA1 — ON1A+AUTO1A — TRIP1A — I 21 — RPC 9 10A (C)(P) — RPC 11 10A (C)(P)
V_{MNB} CRY02 — ON2A+ENA2 — ON2A+AUTO2A — TRIP2A — I 19 — RPC 12 10A (C)(P) — RPC 10 10A (C)(P)
V_{MNB} CRY02 — ON2A+ENA2 — ON2A+AUTO2A — TRIP1A — I 21 — RPC 9 10A (C)(P) — RPC 11 10A (C)(P)

V_{MNC} CRY01 — TRIP2B — ON1B+ENA1 — ON1B+AUTO1B — I 14 — RPC 8 10A (C)(P) — RPC 6 10A (C)(P)
V_{MNC} CRY01 — TRIP1B — ON1B+ENA1 — ON1B+AUTO1B — 2W12 — RPC 5 10A (C)(P) — RPC 7 10A (C)(P)
V_{MNB} CRY02 — TRIP2B — ON2B+ENA2 — ON2B+AUTO2B — I 14 — RPC 8 10A (C)(P) — RPC 6 10A (C)(P)
V_{MNB} CRY02 — TRIP1B — ON2B+ENA2 — ON2B+AUTO2B — I 12 — RPC 5 10A (C)(P) — RPC 7 10A (C)(P)

TRIP2A (TK1)
TRIP1A (TK1)
TRIP2B (TK1)
TRIP1B (TK1)
TRIP2A (TK2)
TRIP1A (TK2)
TRIP2B (TK2)
TRIP1B (TK2)

MN A — CRYO O_2 HTR — TK 1 SNSR 1 — 3A — PNL 014 CB6 — V_{MNA} 014
MN C — CRYO O_2 HTR — TK 1 SNSR 2 — 3A — PNL 016 CB4 — V_{MNC} 016
MN B — CRYO O_2 HTR — TK 2 SNSR 2 — 3A — PNL 015 CB6 — V_{MNB} 015
MN C — CRYO O_2 HTR — TK 2 SNSR 1 — 3A — PNL 016 CB5 — V_{MNC} 016

HTR ON= 811 ± 8 PSIA
HTR OFF= 846 ± 8 PSIA

CPC1 (HEATER SIGNAL)
CPC2 (HEATER SIGNAL)

YELLOW — O_2 PRESS — PNL F7A2 — HI=985 PSIA LO=540 PSIA — C&W ELECTRONICS — CH20 CH0 CH10 CH30 — TK3 — TK4 (& 5)

V45 P1210A — (BFS) — OF3 — O_2 TANK 2 HTR CNTR PRESS — 515 TO 1015 PSIA — 1 S/S — C&W
V45 P1110A — (BFS) — OF1 — O_2 TANK 1 HTR CNTR PRESS — 515 TO 1015 PSIA — 1 S/S — C&W

HEATER CONTROLLER (CPC) 02 TK1
HEATER CONTROLLER (CPC) 02 TK2

ESS 2CA CRYO CNTLR — O_2 TK 1 — 3A — PNL 013 D CB14 — V_{ESS2CA} 013&R15
ESS 1BC CRYO CNTLR — O_2 TK 2 — 3A — PNL 013 B CB7 — V_{ESS1BC} 013&R15

V45 T1107A — (BFS) — OF1 — OM1 — O_2 TANK 1 HTR ASSY 1 TEMP — −425 TO +475°F — 1 S/S — C&W
V45 T1109A — (BFS) — OF3 — OM2 — O_2 TANK 1 HTR ASSY 2 TEMP — −425 TO +475°F — 1 S/S — C&W
V45 T1101A — OF2 — OM2 — O_2 TANK 1 FLUID TEMP — −425 TO +475°F — 1 S/S — C
V45 T1201A — OF3 — OM1 — O_2 TANK 2 FLUID TEMP — −425 TO +475°F — 1 S/S — C
V45 T1209A — (BFS) — OF2 — OM2 — O_2 TANK 2 HTR ASSY 2 TEMP — −425 TO +475°F — 1 S/S — C&W
V45 T1207A — (BFS) — OF3 — OM1 — O_2 TANK 2 HTR ASSY 1 TEMP — −425 TO +475°F — 1 S/S — C&W

DSC +/− — 1 cZ_2 — 2 dZ_1 — 3 dZ_1 — 4 dZ_1

V_{PRFLT1} MMC2&CRY01&4 — I 11 — LF1 — GSE (QTY SELF TEST)
V_{PRFLT2} MMC4&CRY02&3 — I 11 — LF1 — GSE (QTY SELF TEST)

ESS 2CA CRYO QTY — O_2 TK 1 — 3A — PNL 013 D CB22 — V_{ESS2CA} 013&R15
ESS 1BC CRYO QTY — O_2 TK 2 — 3A — PNL 013 B CB20 — V_{ESS1BC} 013&R15

O_2 FILL 1 — V45P1104A (GROUND ONLY)
O_2 FILL 2 — V45P1204A (GROUND ONLY)

O_2 VENT TK1
O_2 VENT TK2

FILL — VENT — SUPPLY — P — Q — T — DC DC — VAC ION PUMP

HTR B2 — HTR A2 — ASSEMBLY 2
HTR B1 — HTR A1 — ASSEMBLY 1

1
2

RELIEF VALVE/ FILTER PACKAGE
CRACK=975 PSIG RESEAT=950 PSIG — MANF RLF
5μ NOMINAL 12μ ABSOLUTE
CRACK=1005 PSIG RESEAT=980 PSIG — O/B RLF

V45 Q1105A — OF1 — OF1 — O_2 TANK 1 QUANTITY — 0 TO 104% — 1 S/S — Q
V45 Q1205A — OF2 — OF2 — O_2 TANK 2 QUANTITY — 0 TO 104% — 1 S/S — Q

V45 P1100A — OF1 — OF1 — O_2 TANK 1 PRESSURE — 0 TO 1200 PSIA — 1 S/S — P
V45 P1200A — OF3 — OF3 — O_2 TANK 2 PRESSURE — 0 TO 1200 PSIA — 1 S/S — P

PRESS — TK1 — PNL 02

$6Z_5$ 3.2-3 3.2-2 — 11
$6Z_5$ 3.2-4 — 15
$6Z_5$ 3.2-4 — 12 — $6Z_3$ 3.3-5
$6Z_4$ 3.2-3 3.2-2 — 13
$6Z_4$ 3.2-4 — 16
$6Z_4$ 3.2-4 3.2-2 — 14 — $6Z_3$ 3.3-5

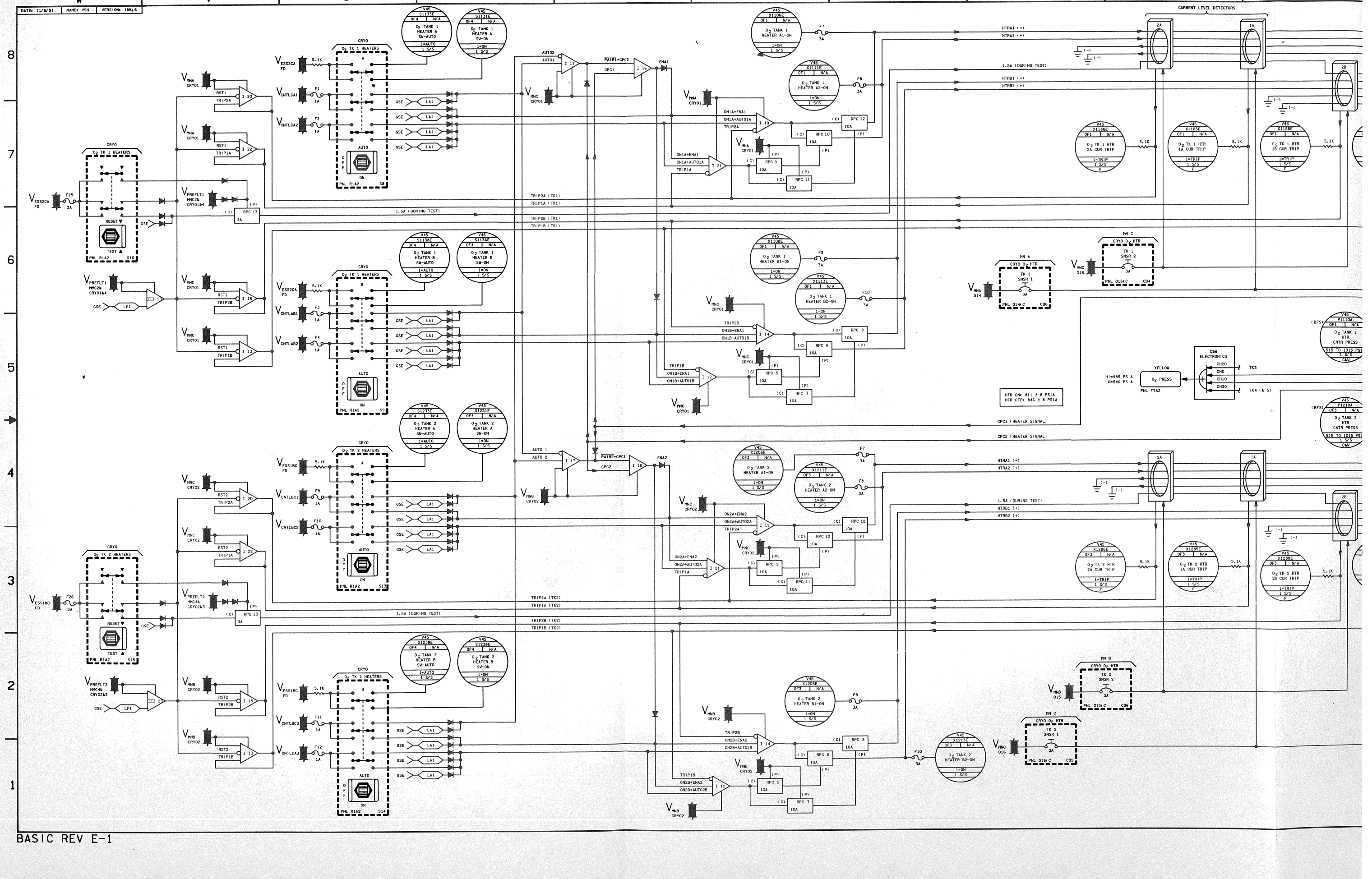
DATE: 11/6/91
NAME: VSH
VERSION: INK6
W V U T S R Q P O N
8 7 6 5 4 3 2 1
CRYO
O2 TK 1 HEATERS
A
B
RESET
TEST
AUTO
OFF
ON
PNL R1A2
S10
S11
S12
S13
S14
S15
CRYO
O2 TK 2 HEATERS
V45 S1133E O2 TANK 1 HEATER A SW-AUTO 1=AUTO 1 S/S
V45 S1131E O2 TANK 1 HEATER A SW-ON 1=ON 1 S/S
V45 S1138E O2 TANK 1 HEATER B SW-AUTO 1=AUTO 1 S/S
V45 S1136E O2 TANK 1 HEATER B SW-ON 1=ON 1 S/S
V45 S1233E O2 TANK 2 HEATER A SW-AUTO 1=AUTO 1 S/S
V45 S1231E O2 TANK 2 HEATER A SW-ON 1=ON 1 S/S
V45 S1238E O2 TANK 2 HEATER B SW-AUTO 1=AUTO 1 S/S
V45 S1236E O2 TANK 2 HEATER B SW-ON 1=ON 1 S/S
V ESS2CA FD
V ESS1BC FD
V CNTLA1 F1 1A
V CNTLA2 F2 1A
V CNTLAB1 F3 1A
V CNTLAB2 F4 1A
V CNTLBC1 F9 1A
V CNTLBC2 F10 1A
V CNTLBC3 F11 1A
V CNTLCA3 F12 1A
5.1K
GSE
LA1
V MNA CRY01
V MNB CRY02
V MNC CRY01
V MNC CRY02
RST1
RST2
TRIP2A
TRIP1A
TRIP2B
TRIP1B
I 20
I 22
I 15
I 13
V PREFLT1 MMC2& CRY01&4
V PREFLT2 MMC4& CRY02&3
LF1
F25 3A
F26 3A
(P)
(C)
RPC 13 3A
1.5A (DURING TEST)
TRIP2A (TK1)
TRIP1A (TK1)
TRIP2B (TK1)
TRIP1B (TK1)
TRIP2A (TK2)
TRIP1A (TK2)
TRIP2B (TK2)
TRIP1B (TK2)
AUTO2
AUTO1
AUTO 1
AUTO 2
PAIR1+CPC2
CPC1
PAIR2+CPC1
CPC2
I 17
I 16
ENA1
ENA2
V MNA CRY01
V MNB CRY02
V MNC CRY01
V MNC CRY02
ON1A+ENA1
ON1A+AUTO1A
TRIP2A
TRIP1A
ON2A+ENA2
ON2A+AUTO2A
ON1B+ENA1
ON1B+AUTO1B
ON2B+ENA2
ON2B+AUTO2B
I 19
I 21
I 14
I 12
RPC 12 10A
RPC 10 10A
RPC 9 10A
RPC 11 10A
RPC 8 10A
RPC 6 10A
RPC 5 10A
RPC 7 10A
V45 X1106E O2 TANK 1 HEATER A1-ON 1=ON 1 S/S
V45 X1111E O2 TANK 1 HEATER A2-ON 1=ON 1 S/S
V45 X1108E O2 TANK 1 HEATER B1-ON 1=ON 1 S/S
V45 X1113E O2 TANK 1 HEATER B2-ON 1=ON 1 S/S
V45 X1206E O2 TANK 2 HEATER A1-ON 1=ON 1 S/S
V45 X1211E O2 TANK 2 HEATER A2-ON 1=ON 1 S/S
V45 X1208E O2 TANK 2 HEATER B1-ON 1=ON 1 S/S
V45 X1213E O2 TANK 2 HEATER B2-ON 1=ON 1 S/S
F7 3A
F8 3A
F9 3A
F10 3A
CURRENT LEVEL DETECTORS
2A
1A
2B
HTRA1 (+)
HTRA2 (+)
HTRB1 (+)
HTRB2 (+)
1.5A (DURING TEST)
V45 X1186E O2 TK 1 HTR 2A CUR TRIP 1=TRIP 1 S/S F
V45 X1185E O2 TK 1 HTR 1A CUR TRIP 1=TRIP 1 S/S F
V45 X1188E O2 TK 1 HTR 2B CUR TRIP 1=TRIP 1 S/S F
V45 X1286E O2 TK 2 HTR 2A CUR TRIP 1=TRIP 1 S/S F
V45 X1285E O2 TK 2 HTR 1A CUR TRIP 1=TRIP 1 S/S F
V45 X1288E O2 TK 2 HTR 2B CUR TRIP 1=TRIP 1 S/S F
5.1K
MN A
MN B
MN C
CRYO O2 HTR
TK 1 SNSR 1
TK 1 SNSR 2
TK 2 SNSR 1
TK 2 SNSR 2
V MNA 014
V MNB 015
V MNC 016
PNL 014 C
PNL 015 C
PNL 016 C
CB4
CB5
CB6
HTR ON= 811 ± 8 PSIA
HTR OFF= 846 ± 8 PSIA
HI=985 PSIA
LO=540 PSIA
YELLOW
O2 PRESS
PNL F7A2
C&W ELECTRONICS
CH20
CH0
CH10
CH30
TK3
TK4 (& 5)
V45 P1110A O2 TANK 1 HTR CNTR PRESS 515 TO 1015 PSI 1 S/S C&W
V45 P1210A O2 TANK 2 HTR CNTR PRESS 515 TO 1015 PSI 1 S/S C&W
(BFS)
CPC1 (HEATER SIGNAL)
CPC2 (HEATER SIGNAL)

BASIC REV E-1

DATE: 10/17/91	NAME: JMB	VERSION: BPT, 6
DATE: 10/25/91	NAME: LAM	VERSION: INK, 5
DATE: 11/6/91	NAME: VSH	VERSION: INK, 6

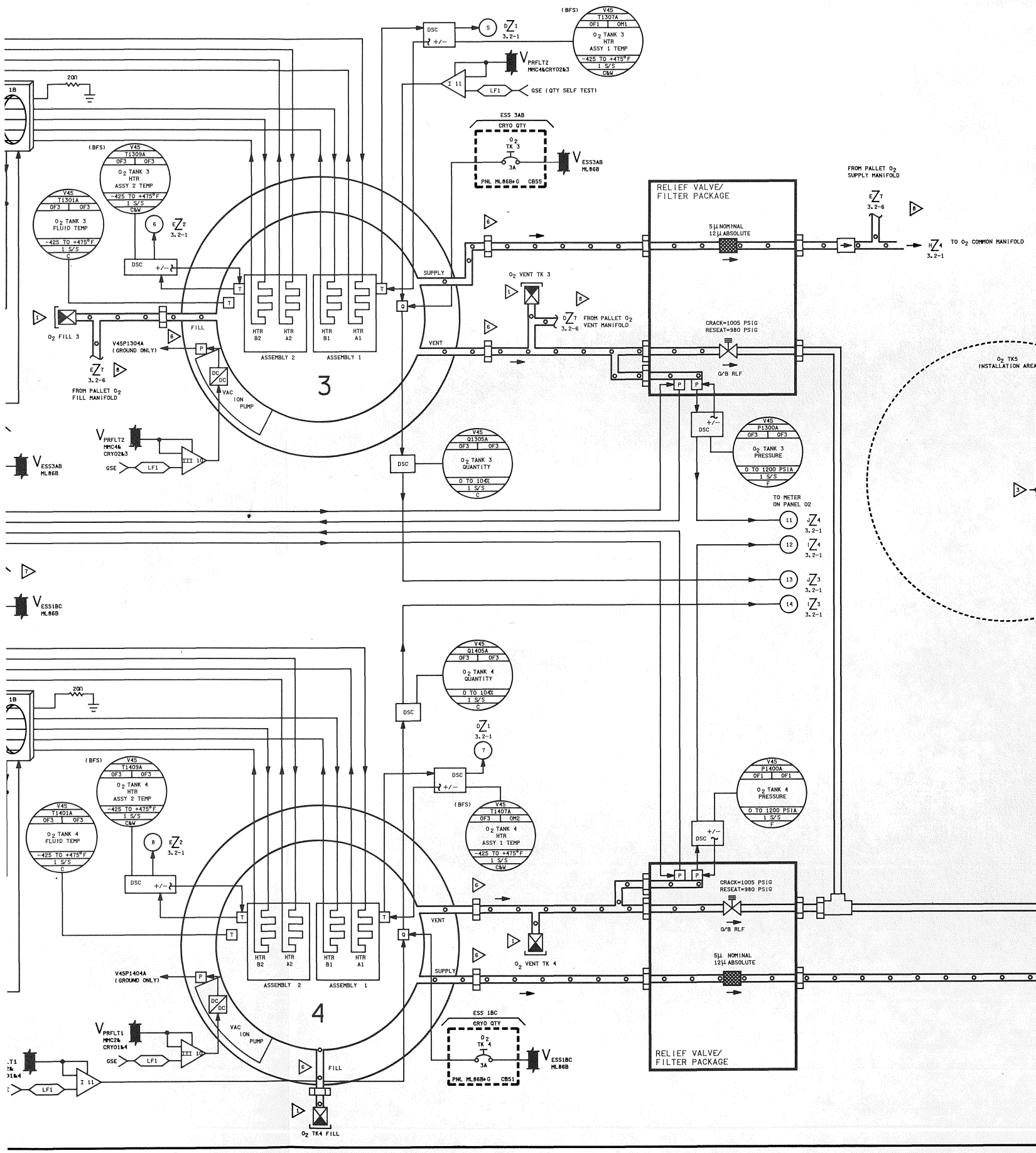

▷ OV-102/5 ONLY

▷ SWITCHES AND CIRCUIT BREAKERS ARE SHOWN AS THEY APPEAR ON OV-103 AND OV-104. ON OV-102, THEY ARE WIRED IDENTICALLY BUT PANEL DECALS APPEAR AS SHOWN BELOW

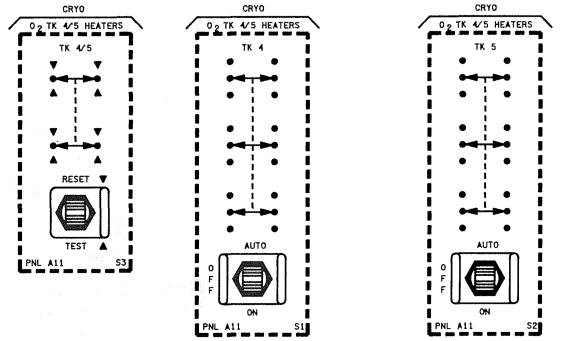

▷ FITTING CAPPED WHEN TANK IS REMOVED

5. REFER TO TABLE 3-I FOR DRAWING REFERENCES

4. TYPE I

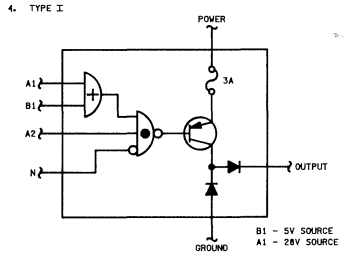

TYPE III

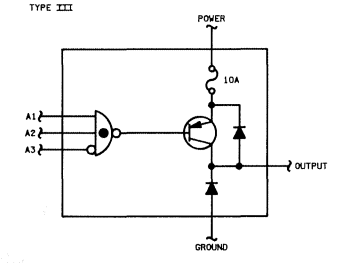

▷ EXTENSION STUBS ARE ADDED AND CAPPED WHEN TANK 5 REMOVED

▷ SHADED PLUMBING INSTALLED ON VEHICLE OV-102/105 ONLY

NOTES: ▷ ALL FILL PORTS AND FILL VENTS ARE LOCATED BEHIND THE PREFLIGHT UMBILICAL ACCESS DOOR

*2 O_2 CRYO 2

SIGNATURE		DATE	NATIONAL AERONAUTICS AND SPACE ADMINISTRATION LYNDON B. JOHNSON SPACE CENTER HOUSTON, TEXAS
DSGN V. S. DOGGETT		6/3/81	
DR V. S. DOGGETT		6/3/81	
ENGR S.R. HIRSHORN			O_2 REACTANT STORAGE 4 TANK CONFIG
ENGR		11/5/91	
APP		11/13/91	
APP			SPACE SHUTTLE
OMNIPLAN S.K. Lindsey		11-14-91	ALL
LTR E	PCN 1		121 X 34

DWG NO 3.2

PARC SHEET 2 OF 7

BASIC REV E-1

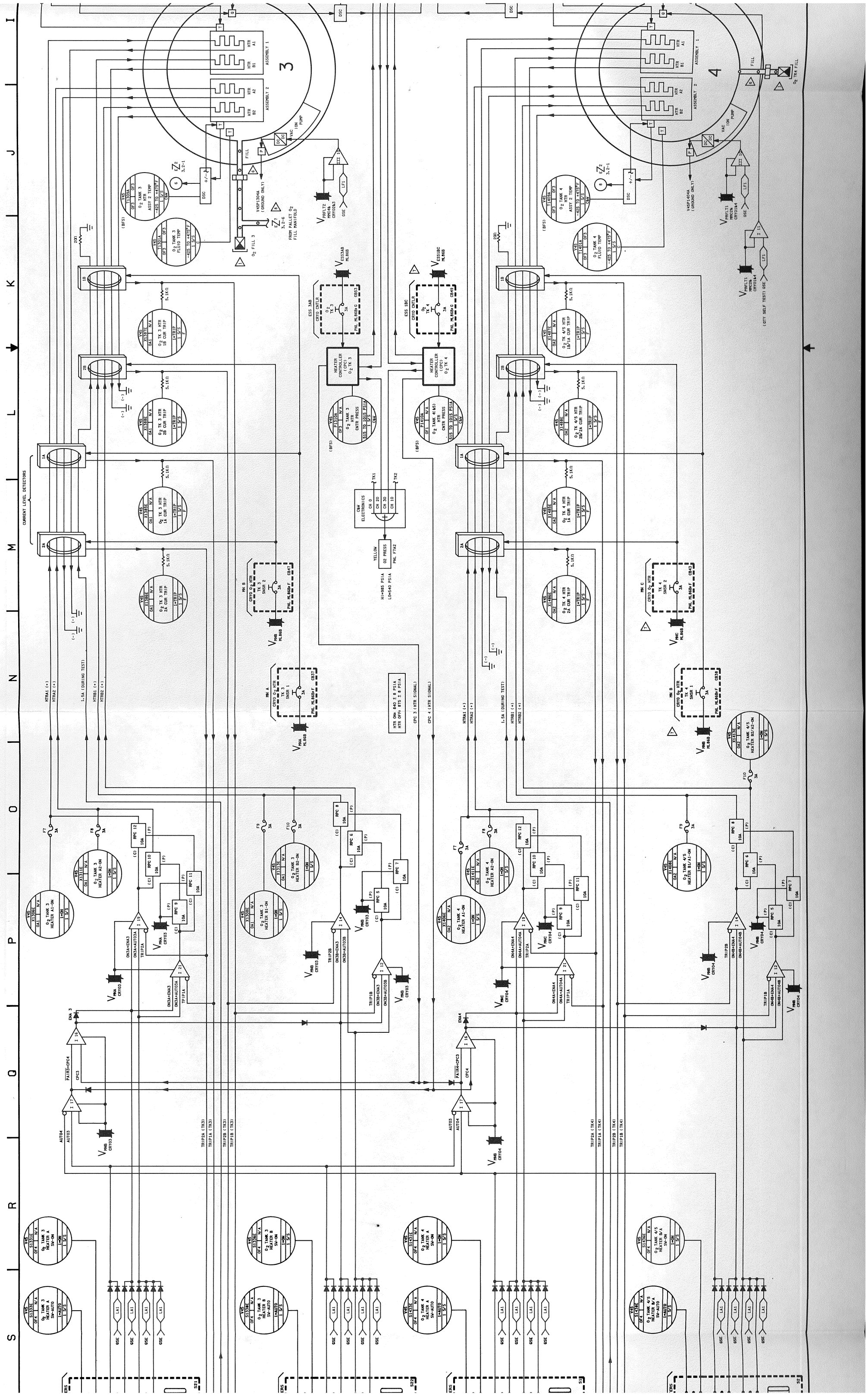
P
O
N
M
L
K
J
I
S
R
Q
3
4
FILL
VAC ION PUMP
ASSEMBLY 1
ASSEMBLY 2
HTR A1
HTR B1
HTR A2
HTR B2
O_2 FILL 3
O_2 TK4 FILL
FROM PALLET O_2 FILL MANIFOLD
V45P13044 (GROUND ONLY)
V45P14044 (GROUND ONLY)
O_2 TANK 3 HTR ASSY 2 TEMP -425 TO +475°F
O_2 TANK 3 FLUID TEMP -425 TO +475°F
O_2 TANK 4 HTR ASSY 2 TEMP -425 TO +475°F
O_2 TANK 4 FLUID TEMP -425 TO +475°F
(BFS)
(QTY SELF TEST) GSE
GSE
DSC
+/-2
E_Z^2 3.2-1
E_Z^1 3.2-6
V_{PRFLT2} MMC4b CRY02&3
V_{PRFLT1} MMC2b CRY01&4
LF1
I 10
I 11
200Ω
1B
2B
1A
2A
5.1KΩ
O_2 TK 3 HTR 1B CUR TRIP
O_2 TK 3 HTR 2B CUR TRIP
O_2 TK 3 HTR 1A CUR TRIP
O_2 TK 3 HTR 2A CUR TRIP
O_2 TK 4/5 HTR 1B/1A CUR TRIP
O_2 TK 4/5 HTR 2B/2A CUR TRIP
O_2 TK 4 HTR 1A CUR TRIP
O_2 TK 4 HTR 2A CUR TRIP
ESS 3AB CRYO CNTLR
ESS 1BC CRYO CNTLR
O_2 TK 3
O_2 TK 4
3A
PNL ML86B-G DS53
PNL ML86B-G CB49
V_{ESS3AB} ML86B
V_{ESS1BC} ML86B
HEATER CONTROLLER (CPC) O_2 TK 3
HEATER CONTROLLER (CPC) O_2 TK 4
O_2 TANK 3 HTR CNTR PRESS 515 TO 1015 PSIA
O_2 TANK 4(4&5) HTR CNTR PRESS 515 TO 1015 PSIA
CURRENT LEVEL DETECTORS
HTRA1 (+)
HTRA2 (+)
HTRB1 (+)
HTRB2 (+)
1.5A (DURING TEST)
HTR ON= 840 ± 8 PSIA
HTR OFF= 875 ± 8 PSIA
CPC 3 (HTR SIGNAL)
CPC 4 (HTR SIGNAL)
MN A CRYO O_2 HTR TK 3 SNSR 1
MN B CRYO O_2 HTR TK 3 SNSR 2
MN B CRYO O_2 HTR TK 4 SNSR 1
MN C CRYO O_2 HTR TK 4 SNSR 2
PNL ML86B-F CB37
PNL ML86B-F CB47
PNL ML86B-F CB38
PNL ML86B-F CB43
V_{MNA} ML86B
V_{MNB} ML86B
V_{MNC} ML86B
C&W ELECTRONICS CH 0 CH 20 CH 30 CH 10
YELLOW
O_2 PRESS
HI=985 PSIA
LO=540 PSIA
PNL F7A2
O_2 TANK 3 HEATER A1-ON
O_2 TANK 3 HEATER A2-ON
O_2 TANK 3 HEATER B1-ON
O_2 TANK 3 HEATER B2-ON
O_2 TANK 4 HEATER A1-ON
O_2 TANK 4 HEATER A2-ON
O_2 TANK 4/5 HEATER B1/A1-ON
O_2 TANK 4/5 HEATER B2/A2-ON
O_2 TANK 3 HEATER A SW-AUTO
O_2 TANK 3 HEATER B SW-AUTO
O_2 TANK 4 HEATER A SW-AUTO
O_2 TANK 4/5 HEATER B/A SW-AUTO
O_2 TANK 3 HEATER A SW-ON
O_2 TANK 3 HEATER B SW-ON
O_2 TANK 4 HEATER A SW-ON
O_2 TANK 4/5 HEATER B/A SW-ON
F7 3A
F8 3A
F9 3A
F10 3A
RPC 12 10A
RPC 10 10A
RPC 11 10A
RPC 9 10A
RPC 8 10A
RPC 6 10A
RPC 5 10A
RPC 7 10A
ON3A+ENA3
ON3A+AUTO3A
TRIP2A
TRIP1A
ON3B+ENA3
ON3B+AUTO3B
TRIP2B
TRIP1B
ON4A+ENA4
ON4A+AUTO4A
ON4B+ENA4
ON4B+AUTO4B
ENA 3
ENA4
PA1R3+CPC4
PA1R4+CPC3
AUTO4
AUTO3
TRIP2A (TK3)
TRIP1A (TK3)
TRIP2B (TK3)
TRIP1B (TK3)
TRIP2A (TK4)
TRIP1A (TK4)
TRIP2B (TK4)
TRIP1B (TK4)
TK1
TK2
S21
S22
S1
S2
ERS

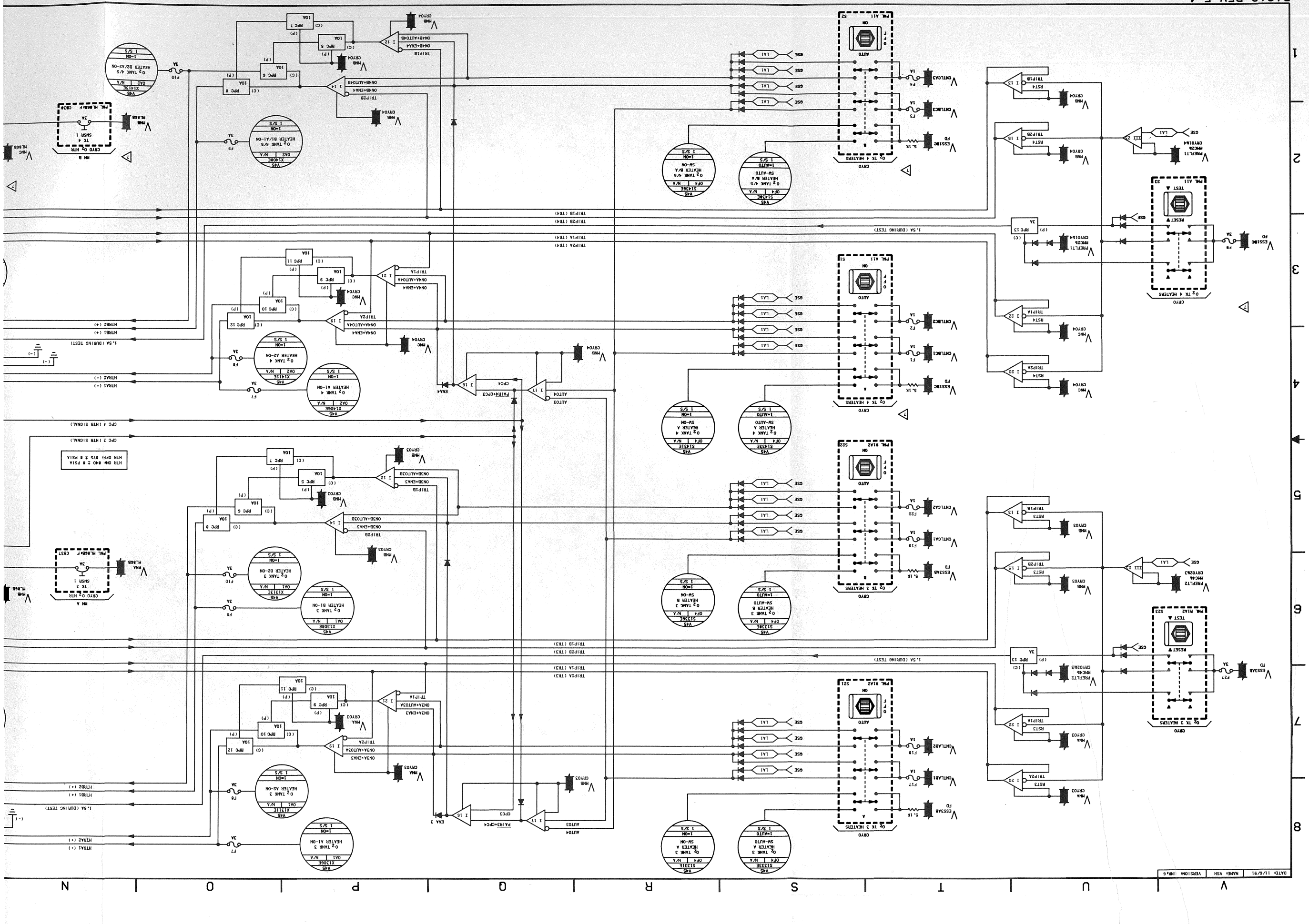
TRIP1B (TX4)
TRIP2B (TX4)
TRIP2A (TX4)
TRIP1A (TX4)
1.5A (DURING TEST)
TRIP1B (TX3)
TRIP2B (TX3)
TRIP2A (TX3)
TRIP1A (TX3)
HTRB2 (+)
HTRB1 (+)
HTRA2 (+)
HTRA1 (+)
CPC 4 (HTR SIGNAL)
CPC 3 (HTR SIGNAL)
HTR ON@ 840 ± 8 PSIA
HTR OFF@ 875 ± 8 PSIA
O2 TX 4 HEATERS
O2 TX 3 HEATERS
CRYO
AUTO
ON
OFF
TEST
RESET
ESSIAC FD
ESSIAB FD
CNTLCA3
CNTLCA2
CNTLCA1
CNTLCB3
CNTLCB2
CNTLCB1
CRYO4 PNB
CRYO3 PNA
CRYO4 PNC
PRELT1 PRC28 CRYO1&4
PRELT2 PRC48 CRYO2&3
PAL A11
PAL B11
PAL M12
PAL A12
PAL B12
PAL M11
O2 TANK 4/5 HEATER B/A SW-AUTO
O2 TANK 4/5 HEATER B/A SW-ON
O2 TANK 4/5 HEATER B1-ON
O2 TANK 4/5 HEATER B2-ON
O2 TANK 4 HEATER A SW-AUTO
O2 TANK 4 HEATER A SW-ON
O2 TANK 4 HEATER A1-ON
O2 TANK 4 HEATER A2-ON
O2 TANK 3 HEATER A SW-AUTO
O2 TANK 3 HEATER A SW-ON
O2 TANK 3 HEATER A1-ON
O2 TANK 3 HEATER A2-ON
O2 TANK 3 HEATER B SW-AUTO
O2 TANK 3 HEATER B SW-ON
O2 TANK 3 HEATER B1-ON
O2 TANK 3 HEATER B2-ON
CRYO TX 4 HTR SWSR 1
CRYO TX 3 HTR SWSR 1
MN B
MN A
MNB
MNA
MNC
MNE
MNF
MNH
MNJ
MNK
MNL
MNM
MNN
MNP
MNR
MNS
MNT
MNU
MNV
MNW
MNX
MNY
MNZ
ML868
ML868P
C838
C837
F10
F9
F8
F7
F6
F5
F4
F3
F2
F1
F20
F19
F18
F17
F27
RPC 5
RPC 6
RPC 7
RPC 8
RPC 9
RPC 10
RPC 11
RPC 12
RPC 13
10A
3A
5.1K
GSE
LA1
ON
OFF
AUTO
S1
S2
S21
S22
S23
S51
S52
S53
S54
V45
V46
V47
V48
X1411E
X1406E
X1410E
X1411E
X1412E
X1413E
X1414E
X1415E
S1413E
S1414E
S1415E
S1416E
S1417E
S1418E
S1419E
S1420E
S1421E
S1422E
S1423E
S1424E
S1425E
S1426E
S1427E
S1428E
S1429E
S1430E
S1431E
S1432E
S1433E
S1434E
S1435E
S1436E
S1437E
S1438E
S1439E
S1440E
S1441E
S1442E
S1443E
S1444E
S1445E
S1446E
S1447E
S1448E
S1449E
S1450E
S1451E
S1452E

DATE: 10/16/90	NAME: VSH	VERSION: INK: 4
DATE: 10/16/91	NAME: PSD	VERSION: BPT: 8
DATE: 10/29/91	NAME: LAM	VERSION: INK: 5

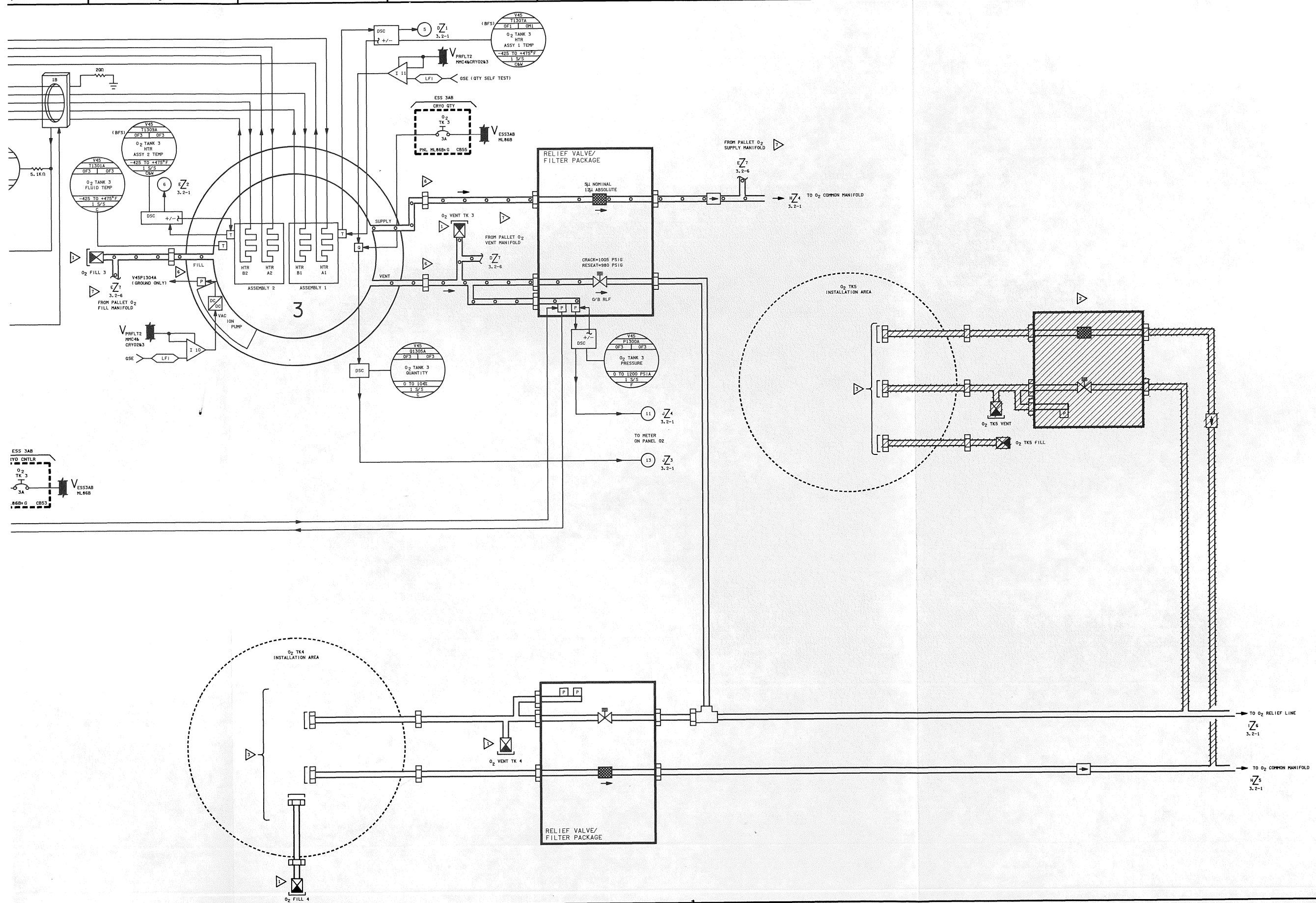

▷ OV-102/5 ONLY

▷ FITTING CAPPED WHEN TANK IS REMOVED

5. REFER TO TABLE 3-I FOR DRAWING REFERENCES

4. TYPE I

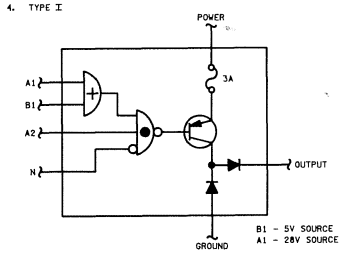

TYPE III

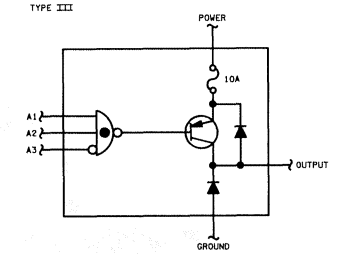

3 EXTENSION STUBS ARE ADDED AND CAPPED WHEN TANK REMOVED

2 SHADED PLUMBING INSTALLED ON VEHICLE OV-102/105 ONLY

NOTES: 1 ALL FILL PORTS AND FILL VENTS ARE LOCATED BEHIND THE PREFLIGHT UMBILICAL ACCESS DOOR

*2 O_2 CRYO 3

SIGNATURE		DATE	NATIONAL AERONAUTICS AND SPACE ADMINISTRATION LYNDON B. JOHNSON SPACE CENTER HOUSTON, TEXAS
DSGN V.S. DOGGETT		6/3/81	
DR V.S. DOGGETT		6/3/81	
ENGR S.R. HIRSHORN			O_2 REACTANT STORAGE 3 TANK CONFIG
ENGR		11/5/91	
APP		11/5/91	
APP			SPACE SHUTTLE / DWG NO 3.2
OMNIPLAN S.K. Baker		11-2-91	ALL
LTR E	PCN 1		121 X 34 / PAGE / SHEET 3 OF 7

BASIC REV E-1

R | Q | P | O | N | M | L | K | J | I

CURRENT LEVEL DETECTORS

1A | 2A | 1B | 2B

HTRA1 (+) | HTRA2 (+) | HTRB1 (+) | HTRB2 (+)

1.5A (DURING TEST)

5.1KΩ | 5.1KΩ | 5.1KΩ | 5.1KΩ

O2 TK 3 HTR 1A CUR TRIP — X1356E — V45 — OA1 | N/A
O2 TK 3 HTR 2A CUR TRIP — X1356E — V45 — OA1 | N/A
O2 TK 3 HTR 1B CUR TRIP — X1357E — V45 — OA1 | N/A
O2 TK 3 HTR 2B CUR TRIP — X1357E — V45 — OA1 | N/A

(BPS) V45 T1301A OP3 | OP3 — O2 TANK 3 ASSY 2 TEMP HTR — -425 TO 475°F — 1 S/S — C&W

O2 TANK 3 FLUID TEMP — V45 T1301A OP3 | OP3 — -425 TO 475°F — 1 S/S — C

ASSEMBLY 1 | ASSEMBLY 2

HTR A1 | HTR B1 | HTR A2 | HTR B2

V45P13044 (GROUND ONLY)

FROM PALLET O2 FILL 3

O2 FILL 3 — FILL — VENT — SUPPLY

DSC | +/- | 3,2-1 | 3,2-6 | 3,2-7 | 3,2-2

LEFT

OSE — PP0172 — MC46 — CRYO243

I 10

10N PUMP — VAC — DC — DC — P — T — Q

O2 TANK 4 INSTALLATION AREA

O2 FILL 4

CRYO O2 TANK 3 HTR SUPPLY — 3A — SNSR 1 TK 3 — PNL ML68A — CB37 — ML68B — PWR A

CRYO O2 HTR RTN — 3A — SNSR 2 TK 3 — PNL ML68A — CB37 — ML68B — PWR B

CRYO O2 TANK 3 HEATER CONTROLLER (CPC) O2 TK 3 — HEATER

(BPS) V45 P1310A OP3 | N/A — O2 TANK 3 HTR CNTR PRESS — 615 TO 1015 PSIA — 1 S/S — C&W

ELECTRONICS C&W — CH 0 | CH 10 | CH 20 | CH 30 — TX1 | TX2

YELLOW — O2 PRESS — PNL FTA2 — HI=985 PSIA — LO=540 PSIA

CPC 3 (HTR SIGNAL)

HTR ON= 840 ± 8 PSIA
HTR OFF= 815 ± 8 PSIA

ESS 3A8 — CRYO CNTLR — O2 TK 3 — 3A — PNL ML68A-G CB53 — ESS3A8 — ML68B

PNL ML68A-F CB37 — 3A — F9 — F10 — 3A — F8 — 3A — F7 — 3A

O2 TANK 3 HEATER B1-ON — V45 X1356E — OA1 | N/A — 1 S/S
O2 TANK 3 HEATER B2-ON — V45 X1356E — OA1 | N/A — 1 S/S
O2 TANK 3 HEATER A1-ON — V45 X1356E — OA1 | N/A — 1 S/S
O2 TANK 3 HEATER A2-ON — V45 X1311E — OA1 | N/A — 1 S/S

RPC 5 — 10A — (C) — (P) — PWR CRYO3 — ONA3B+ENA3 — TRIP2B — ONA3B+AUTO3B — I 12
RPC 7 — 10A — (C) — (P) — PWR CRYO3 — ONA3B+ENA3 — TRIP1B — ONA3B+AUTO3B — I 14
RPC 6 — 10A — (C) — (P) — PWR CRYO3 — ONB3B+ENA3 — TRIP2B — ONB3B+AUTO3B — I 18
RPC 8 — 10A — (C) — (P) — PWR CRYO3 — ONB3B+ENA3 — TRIP1B — ONB3B+AUTO3B — I 14

RPC 9 — 10A — (C) — (P) — PWR CRYO3 — ONA3A+ENA3 — TRIP1A — ONA3A+AUTO3A — I 21
RPC 11 — 10A — (C) — (P) — PWR CRYO3 — ONA3A+ENA3 — TRIP2A — ONA3A+AUTO3A — I 19
RPC 10 — 10A — (C) — (P) — PWR CRYO3 — ONB3A+ENA3 — TRIP2A — ONB3A+AUTO3A — I 17
RPC 12 — 10A — (C) — (P) — PWR CRYO3 — ONB3A+ENA3 — TRIP1A — ONB3A+AUTO3A — I 16

ENA 3 — CPC3 — PA1R3 — AUTO3

TRIP1B (TX3)
TRIP2B (TX3)
TRIP1A (TX3)
TRIP2A (TX3)

O2 TANK 3 HEATER B SW-AUTO — V45 S13316 — OF4 | N/A — 1=AUTO
O2 TANK 3 HEATER B SW-ON — V45 S13316 — OF4 | N/A — 1=ON
O2 TANK 3 HEATER A SW-AUTO — V45 S13316 — OF4 | N/A — 1=AUTO
O2 TANK 3 HEATER A SW-ON — V45 S13316 — OF4 | N/A — 1=ON

NOT CONNECTED
NOT CONNECTED

GSE — LA1 — GSE — LA1 — GSE — LA1 — GSE — LA1 — GSE — LA1 — GSE — LA1 — GSE — LA1 — GSE — LA1

DATE: 10/29/91 | NAME: LAM | VERSION#: INK.5

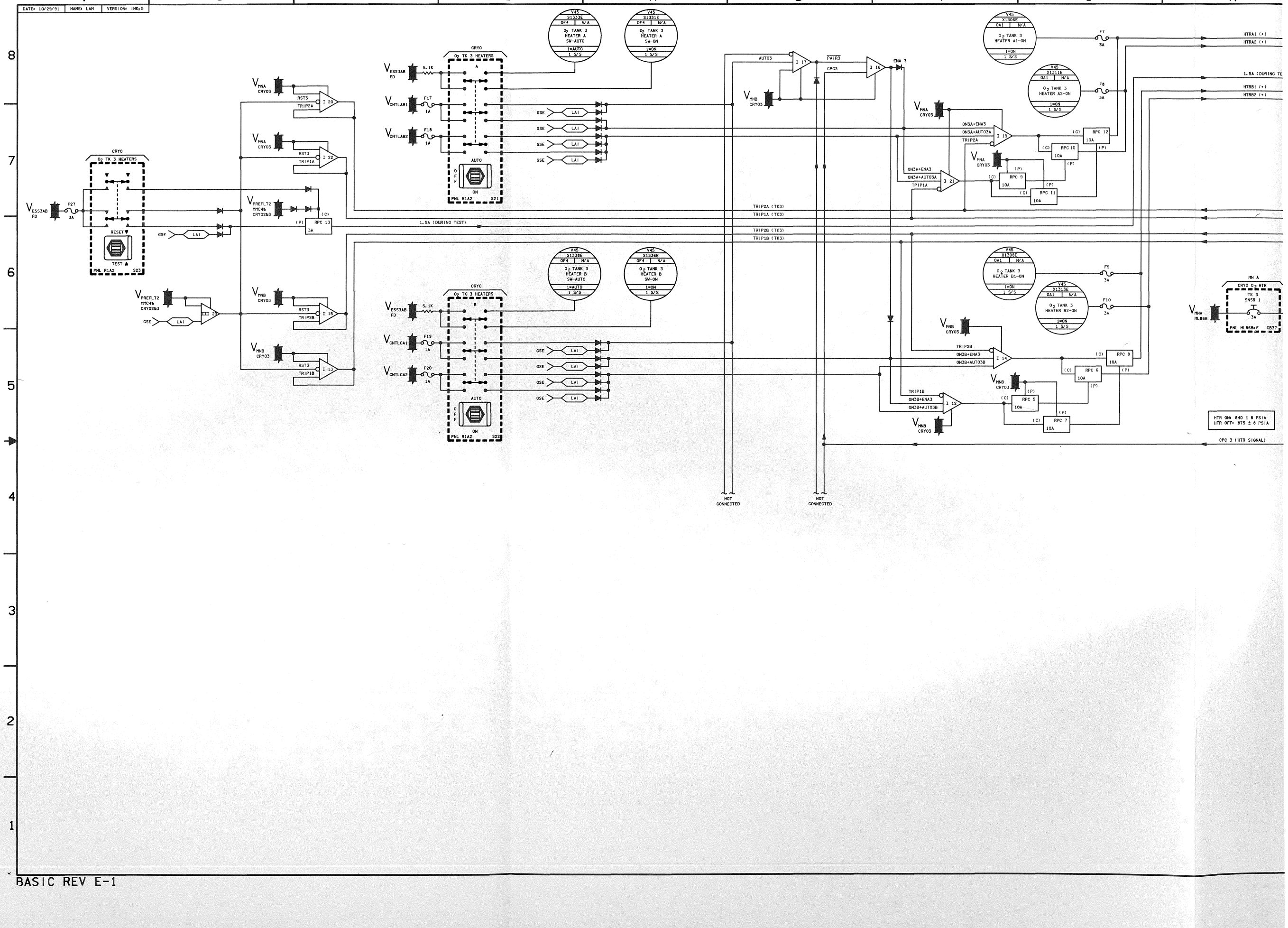

BASIC REV E-1

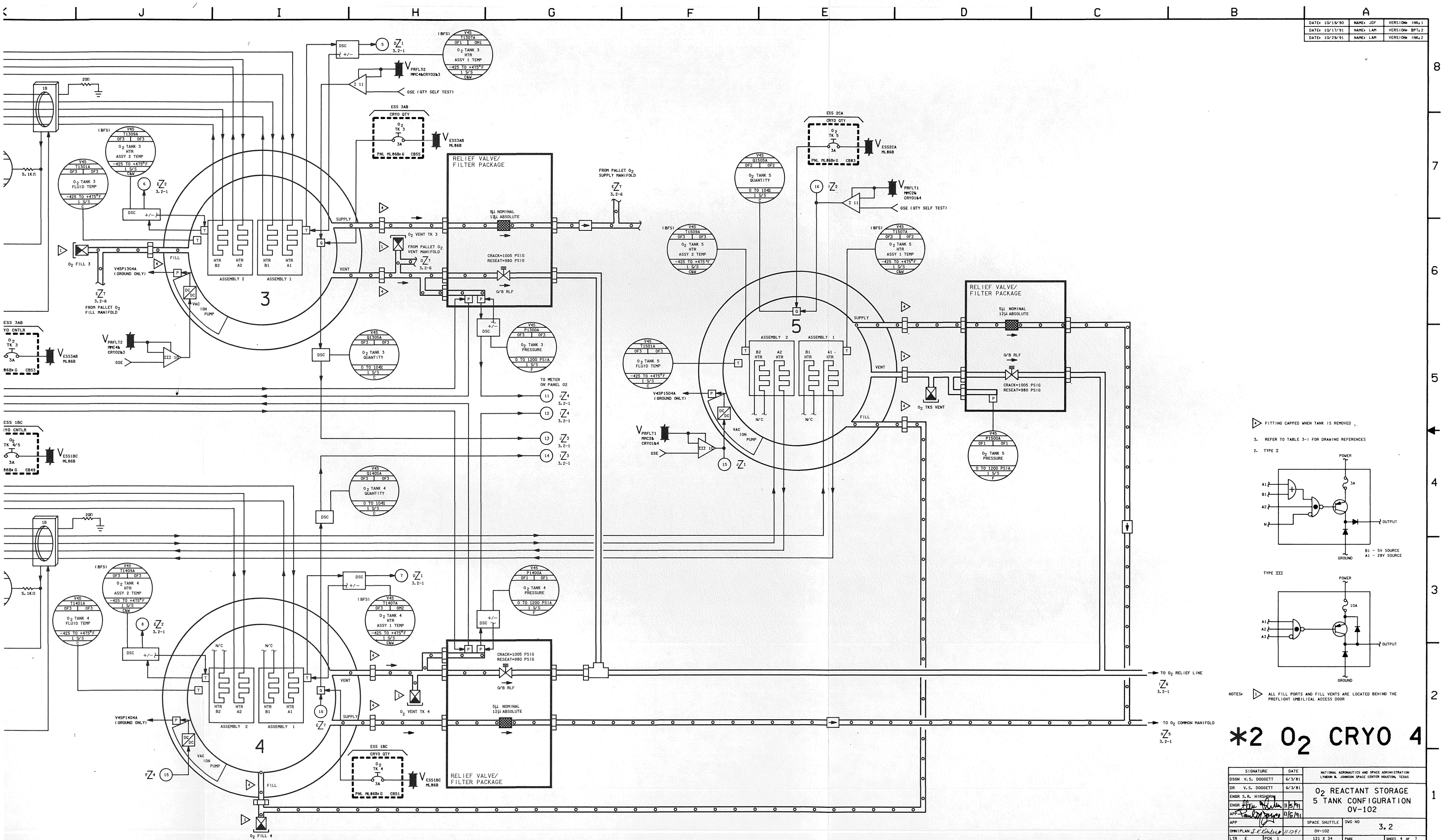

DATE: 10/19/90	NAME: JDF	VERSION: INK, 1
DATE: 10/17/91	NAME: LAM	VERSION: BPT, 2
DATE: 10/29/91	NAME: LAM	VERSION: INK, 2

4. FITTING CAPPED WHEN TANK IS REMOVED
3. REFER TO TABLE 3-1 FOR DRAWING REFERENCES
2. TYPE I

TYPE III

NOTES: 1. ALL FILL PORTS AND FILL VENTS ARE LOCATED BEHIND THE PREFLIGHT UMBILICAL ACCESS DOOR

*2 O_2 CRYO 4

SIGNATURE	DATE	NATIONAL AERONAUTICS AND SPACE ADMINISTRATION LYNDON B. JOHNSON SPACE CENTER HOUSTON, TEXAS
DSGN V.S. DOGGETT	6/3/81	
DR V.S. DOGGETT	6/3/81	O_2 REACTANT STORAGE 5 TANK CONFIGURATION OV-102
ENGR S.R. HIRSHORN		
ENGR [signature]	11/5/91	
APP [signature]	11/6/91	
APP		SPACE SHUTTLE
OMNIPLAN S.K. Kindrew	11-12-91	OV-102
LTR E	PCN 1	121 X 34

DWG NO 3.2

PAGE SHEET 4 OF 7

BASIC REV E-1

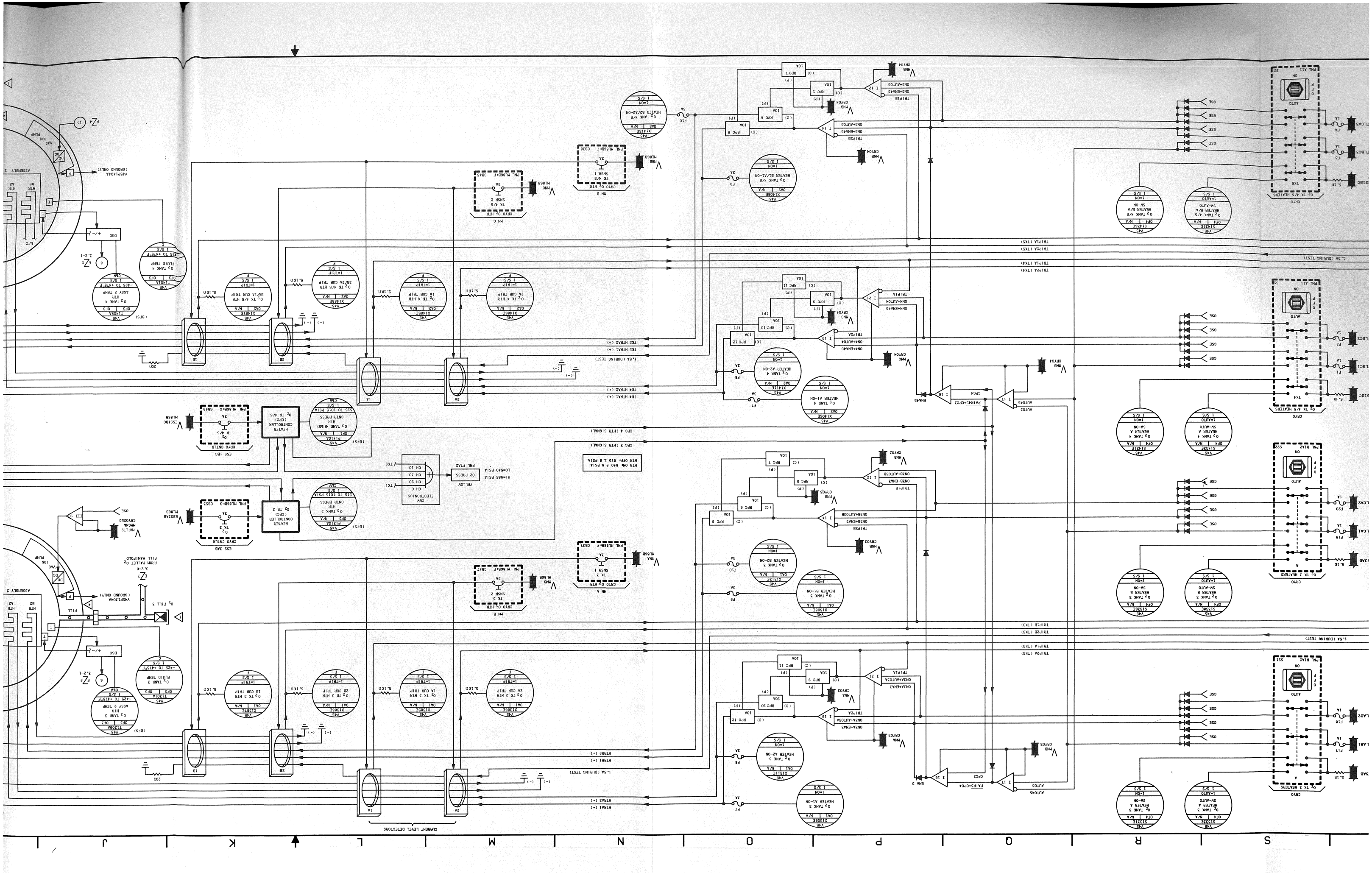
S
R
Q
P
O
N
M
L
K
J
CURRENT LEVEL DETECTORS
1A
2A
1B
2B
2C0
5.1K Ω
1.5A (DURING TEST)
TX4 HTR1 (+)
TX4 HTR2 (+)
TX5 HTR1 (+)
TX5 HTR2 (+)
TRIP1A (TX4)
TRIP2A (TX4)
TRIP1B (TX3)
TRIP2B (TX3)
TX4
TX5
TX3
O2 TX 4/5 HEATERS
O2 TX 3 HEATERS
CRYO
AUTO
ON
OFF
PNL A11
PNL A12
PNL B12
PNL B11
S1
S2
S21
S22
GSE
TLC1
TLC2
TLC3
TLC4
TLC5
TLC6
TLA1
TLA2
TLA3
TLB1
TLB2
TLB3
F1
F2
F3
F4
F17
F18
F19
F20
1A
5.1K
CRYO O2 HTR
MN A
MN B
MN C
CRYO O2 HTR TX 3 SNSR 1
CRYO O2 HTR TX 3 SNSR 2
CRYO O2 HTR TX 4/5 SNSR 1
CRYO O2 HTR TX 4/5 SNSR 2
PNL ML868F C837
PNL ML868F C847
PNL ML868F C843
PNL ML868F C838
ML868
PNA
PNB
PNC
PND
CRYO3
CRYO4
O2 TANK 3 HEATER A1-ON
O2 TANK 3 HEATER A2-ON
O2 TANK 3 HEATER B1-ON
O2 TANK 3 HEATER B2-ON
O2 TANK 4 HEATER A1-ON
O2 TANK 4 HEATER A2-ON
O2 TANK 4 HEATER B1-ON
O2 TANK 4 HEATER B2-ON
O2 TANK 3 HEATER A SW-AUTO
O2 TANK 3 HEATER A SW-ON
O2 TANK 3 HEATER B SW-AUTO
O2 TANK 3 HEATER B SW-ON
O2 TANK 4 HEATER A SW-AUTO
O2 TANK 4 HEATER A SW-ON
O2 TANK 4 HEATER B SW-AUTO
O2 TANK 4 HEATER B SW-ON
HEATER CONTROLLER (CPC) O2 TX 4/5
HEATER CONTROLLER (CPC) O2 TX 3
CRYO CNTLR O2 TX 4/5
CRYO CNTLR O2 TX 3
ESS 18C
ESS 3AB
ESS18C
ESS3AB
O2 TANK 4 HTR ASSY 2 TEMP
O2 TANK 3 HTR ASSY 2 TEMP
O2 TANK 4 FLUID TEMP
O2 TANK 3 FLUID TEMP
-425 TO +425°F
O2 TX 4/5 HTR 1A CUR TRIP
O2 TX 4/5 HTR 1B CUR TRIP
O2 TX 4/5 HTR 2A CUR TRIP
O2 TX 4/5 HTR 2B CUR TRIP
O2 TX 3 HTR 1A CUR TRIP
O2 TX 3 HTR 1B CUR TRIP
O2 TX 3 HTR 2A CUR TRIP
O2 TX 3 HTR 2B CUR TRIP
O2 TANK 4 HTR
O2 TANK 3 HTR
O2 TANK 4 (4.5)
O2 TANK 3 (4.5)
O2 TX 4/5
O2 TX 3
O2 PRESS
ELECTRONICS
CH 10
CH 20
CH 30
CH 40
TX1
TX2
YELLOW
HI=985 PSIA
LO=540 PSIA
PNL F7A2
HTR ON= 840 ± 8 PSIA
HTR OFF= 815 ± 8 PSIA
CPC 4 (HTR SIGNAL)
CPC 3 (HTR SIGNAL)
P1410A
P1310A
S15 TO 10IS PSIA
CPC4
CPC3
PAIR4+CPC4
PAIR3+CPC3
AUTO45
AUTO3
ENA4
ENA3
ONA4+AUTO4
ONA4+ENA45
ONA4+AUTO3A
ONA4+ENA3
ONA3+AUTO3A
ONA3+ENA3
ONB3+AUTO3B
ONB3+ENA3
ONB4+AUTO4
ONB4+ENA45
ONS+AUTO5
ONS+ENA45
TRIP1A
TRIP2A
TRIP1B
TRIP2B
RPC 5
RPC 6
RPC 7
RPC 8
RPC 9
RPC 10
RPC 11
RPC 12
10A
F6
F7
F8
F9
F10
3A
DSC
+/-2
VAC PUMP
10N
DC
VAC
FILL MANIFOLD
FROM PALLET O2 FILL
ASSEMBLY 2
ASSEMBLY 3
(GROUND ONLY)
V45P1404A
V45P1303A
3.2-1
3.2-6
3.2-7
3.2-8
Z4
Z2
Z7
Z8
HTR
A2
B2
A1
B1
N/C
N/A
OFF
ON
SW-AUTO
SW-ON
1=AUTO
1=ON
1=TRIP
1 S/S
2 S/S
C
F
P
C&W
GSE

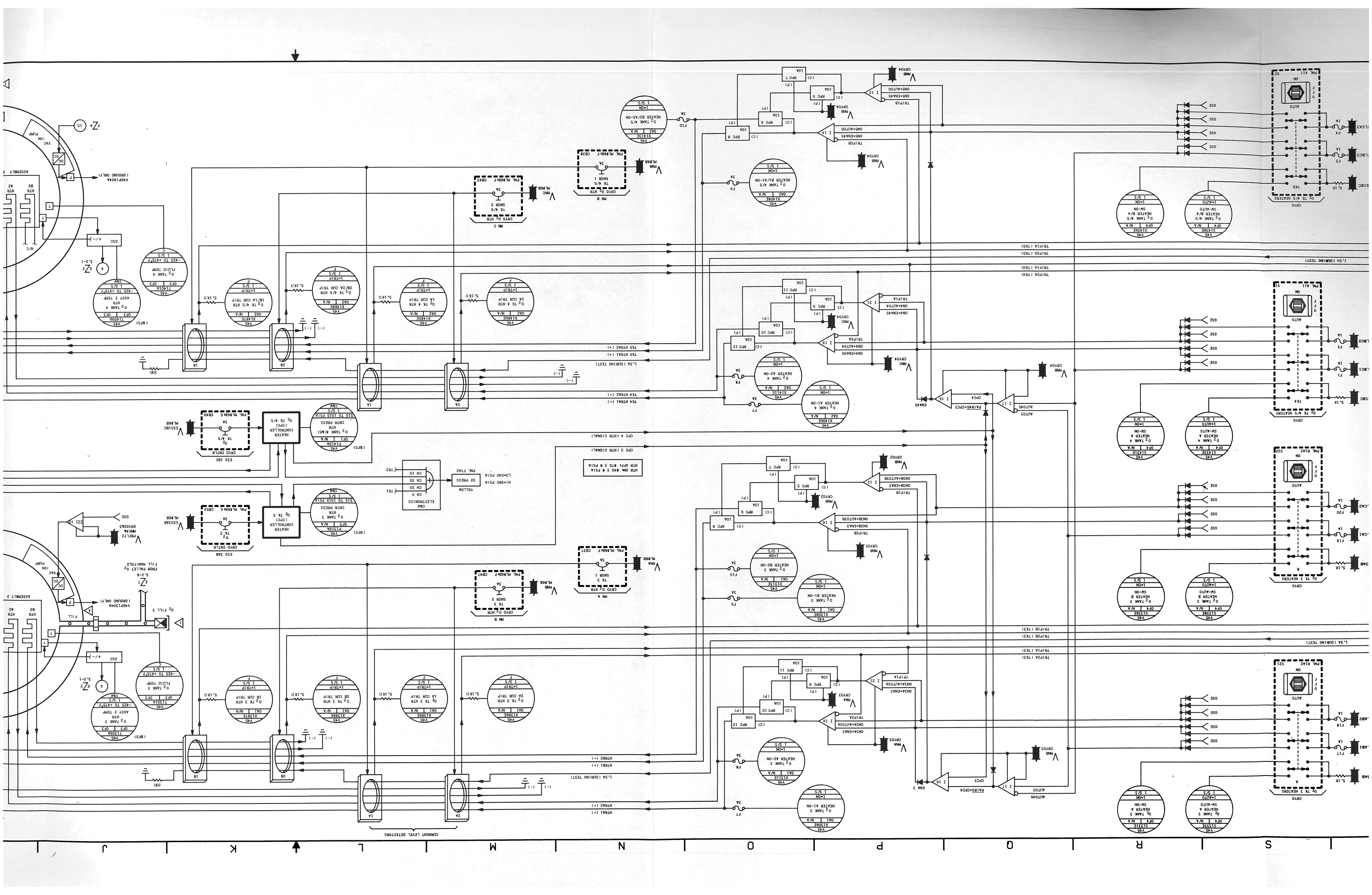
S R Q P O N M L K J
CRYO
O2 TX 4/5 HEATERS
O2 TX 3 HEATERS
AUTO
ON
OFF
PNL A11
PNL A12
PNL R1A2
PNL R2A2
CRYO O2 HTR
MN B
MN C
MN A
CRYO O2 FILL 3
CRYO CNTLR
ESS 1BC
ESS 3AB
HEATER CONTROLLER (CPC)
O2 TX 4/5
O2 TX 3
O2 FILL 3
O2 TANK 4/5 HEATER B/A SW-ON
O2 TANK 4/5 HEATER B/A SW-AUTO
O2 TANK 4/5 HEATER A SW-ON
O2 TANK 4/5 HEATER A SW-AUTO
O2 TANK 3 HEATER B SW-ON
O2 TANK 3 HEATER B SW-AUTO
O2 TANK 3 HEATER A SW-ON
O2 TANK 3 HEATER A SW-AUTO
O2 TANK 4 HEATER B1-ON
O2 TANK 4 HEATER B2-ON
O2 TANK 4 HEATER A1-ON
O2 TANK 4 HEATER A2-ON
O2 TANK 3 HEATER B1-ON
O2 TANK 3 HEATER B2-ON
O2 TANK 3 HEATER A1-ON
O2 TANK 3 HEATER A2-ON
O2 TANK 4/5 HEATER BL/A1-ON
O2 TANK 4/5 HEATER B2/A2-ON
O2 TANK 4 FILLED TEMP
O2 TANK 3 FILLED TEMP
O2 TANK 4 HTR ASSY 2 TEMP
O2 TANK 3 HTR ASSY 2 TEMP
O2 TX 4/5 HTR 1A CUR TRIP
O2 TX 4/5 HTR 1B CUR TRIP
O2 TX 4/5 HTR 2A CUR TRIP
O2 TX 4/5 HTR 2B CUR TRIP
O2 TX 4 HTR 1A CUR TRIP
O2 TX 3 HTR 1A CUR TRIP
O2 TX 3 HTR 1B CUR TRIP
O2 TX 3 HTR 2A CUR TRIP
O2 TX 3 HTR 2B CUR TRIP
O2 TANK 4/5 HTR CNTR PRESS
O2 TANK 4(5) HTR CNTR PRESS
O2 TANK 3 HTR CNTR PRESS
515 TO 1015 PSIA
02 PRESS
ELECTRONICS
CRYO O2 HTR TK 4/5 SNSR 1
CRYO O2 HTR TK 4/5 SNSR 2
CRYO O2 HTR TK 3 SNSR 1
CRYO O2 HTR TK 3 SNSR 2
HTR ON# 840 ± 8 PSIA
HTR OFF# 875 ± 8 PSIA
HI=985 PSIA
LO=540 PSIA
CURRENT LEVEL DETECTORS
1.5A (DURING TEST)
TRIP1A (TX4)
TRIP2A (TX4)
TRIP1B (TX3)
TRIP2B (TX3)
TRIP1A (TX3)
TRIP2A (TX3)
HTR1A1 (+)
HTR1A2 (+)
HTR1B1 (+)
HTR1B2 (+)
TX4 HTR1A1 (+)
TX4 HTR1A2 (+)
TX4 HTR1B1 (+)
TX4 HTR1B2 (+)
TX3 HTR1A1 (+)
TX3 HTR1A2 (+)
TX3 HTR1B1 (+)
TX3 HTR1B2 (+)
CPC 4 (HTR SIGNAL)
CPC 3 (HTR SIGNAL)
PNL ML668A CB43
PNL ML668B CB49
PNL ML668F CB38
PNL ML668F CB47
PNL ML668F CB37
PNL ML668G CB52
ESS1BC ML668
ESS3AB ML668
ESS4BC ML668
ESS4AB ML668
ML668
ASSEMBLY 2
HTR A1
HTR B2
HTR A2
N/C
VAC ION PUMP
(GROUND ONLY)
V45P14044
V45P13044
DSC
+/-
CRYO CNTLR
PNL ML668G CB52
PNL ML668F CB47
PNL ML668F CB37
PNL ML668F CB38
PNL ML668A CB43
PNL ML668A CB47
PNL ML668A CB37
PNL ML668A CB38
PNL ML668G CB49
PNL ML668G CB52
PNL ML668A CB49
PNL ML668A CB52
PNL ML668F CB43

BASIC REV E-1

DATE: 10/28/90 | NAME: LAM | VERSION: IND.2

1 2 3 4 5 6 7 8

V U T S R Q P O N

TRIP1A (TX5)
TRIP2A (TX5)
TRIP1A (TX4)
TRIP2A (TX4)
TRIP1B (TX3)
TRIP2B (TX3)
TRIP1A (TX3)
TRIP2A (TX3)

1.5A (DURING TEST)

TX5 HTRA1 (+)
TX5 HTRA2 (+)
TX4 HTRA1 (+)
TX4 HTRA2 (+)
HTRB1 (+)
HTRB2 (+)
HTRA1 (+)
HTRA2 (+)

CPC 4 (HTR SIGNAL)
CPC 3 (HTR SIGNAL)

HTR ON@ 840 ± 8 PSIA
HTR OFF@ 815 ± 8 PSIA

O2 TX 4/5 HEATERS
O2 TX 3 HEATERS
O2 TANK 4/5 HEATER B1/A1-ON
O2 TANK 4/5 HEATER B2/A2-ON
O2 TANK 4/5 HEATER A1-ON
O2 TANK 4/5 HEATER A2-ON
O2 TANK 4/5 HEATER B/A SW-ON
O2 TANK 4/5 HEATER B/A SW-AUTO
O2 TANK 3 HEATER B1-ON
O2 TANK 3 HEATER B2-ON
O2 TANK 3 HEATER A1-ON
O2 TANK 3 HEATER A2-ON
O2 TANK 3 HEATER B/A SW-ON
O2 TANK 3 HEATER B/A SW-AUTO
O2 TANK 4 HEATER A1-ON
O2 TANK 4 HEATER A2-ON
O2 TANK 4 HEATER A SW-ON
O2 TANK 4 HEATER A SW-AUTO

PNL A11 (S1 / S2)
PNL R1A2 (S21 / S22)
PNL M.868 CB28
PNL M.868F CB31
CRYO O2 HTR SNSR 1 TK 4/5
CRYO O2 HTR SNSR 1 TK 3

ESS1&2 PD
ESS3&4 PD
CNTLC1&2 F4
CNTLB1&2 F3
CNTLA1&2 F2
CNTLA&B1 F1
CNTLC1&2 F20
CNTLB1&2 F19
CNTLA1&2 F18
CNTLA&B1 F17
F6 F7 F8 F9 F10 F11
RPC 5 RPC 6 RPC 7 RPC 8 RPC 9 RPC 10 RPC 11 RPC 12 RPC 13
PNEL11 PNC24 CRYO1&4
PNEL12 PNC48 CRYO2&3
PNA PNB PNC PND CRYO1 CRYO2 CRYO3 CRYO4
TRIP1A TRIP2A TRIP1B TRIP2B
RST45 RST13
ON4+ENA45 ON4+AUTO4
ON3A+ENA3 ON3A+AUTO3A
ON3B+ENA3 ON3B+AUTO3B
ON5+ENA45 ON5+AUTO5
AUTO45 AUTO3
PAIR5+CPC4 PAIR3+CPC3
CPC4 CPC3
ENA45 ENA 3
TEST RESET

DATE: 10/16/90	NAME: VSH	VERSION: INK: 1
DATE: 10/19/90	NAME: VSH	VERSION: INK: 2
DATE: 11/01/90	NAME: MAG	VERSION: INK: 3

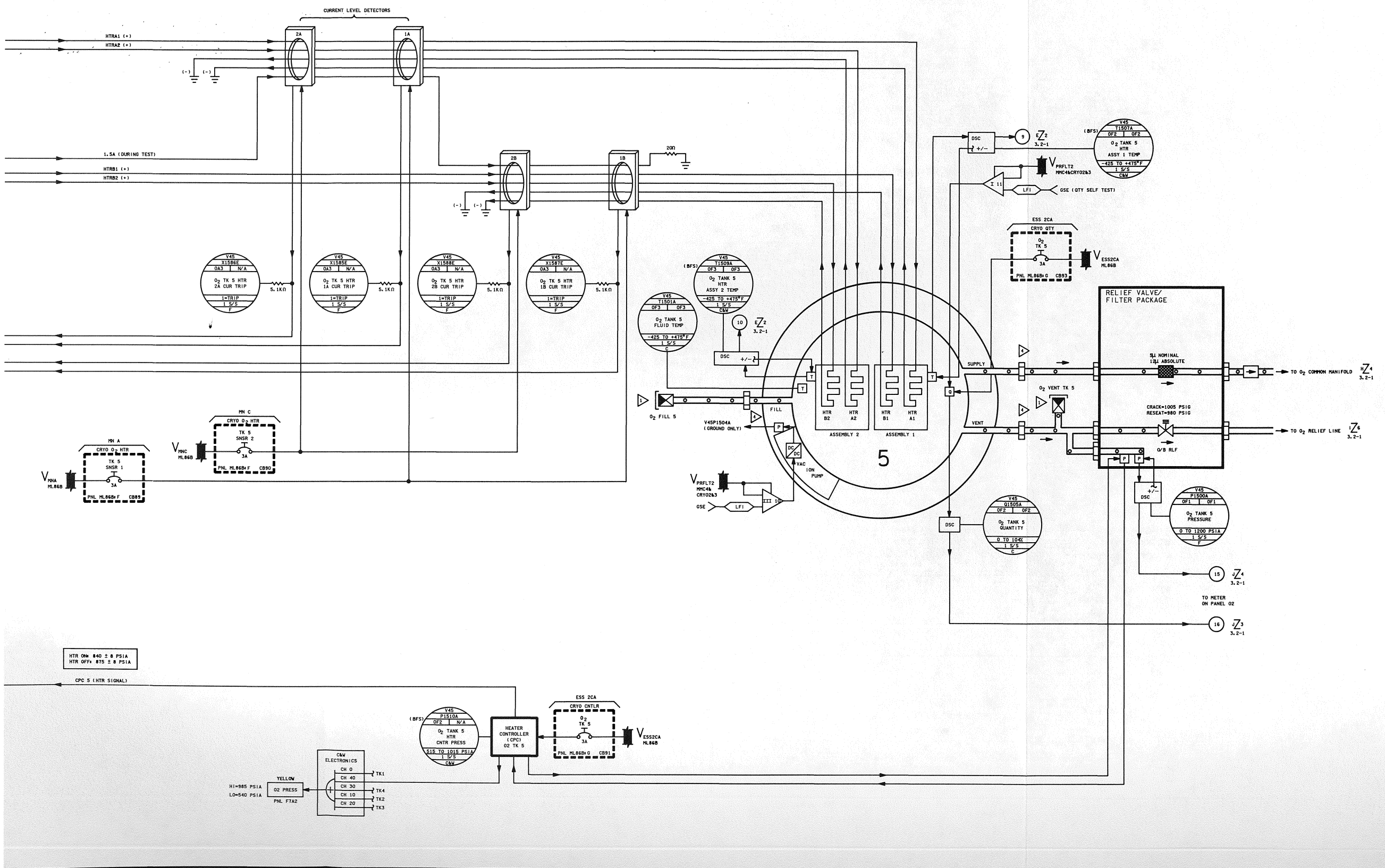

4. FITTING CAPPED WHEN TANK IS REMOVED
3. REFER TO TABLE 3-1 FOR DRAWING REFERENCES
2. TYPE I

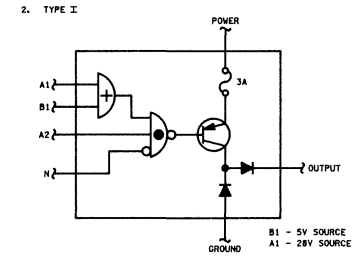

TYPE III

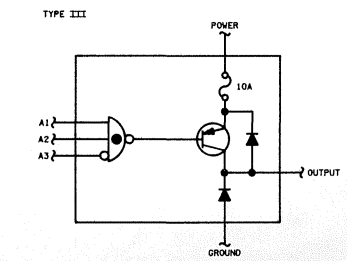

NOTES: 1. ALL FILL PORTS AND FILL VENTS ARE LOCATED BEHIND THE PREFLIGHT UMBILICAL ACCESS DOOR

*2 O_2 CRYO 5

SIGNATURE		DATE	NATIONAL AERONAUTICS AND SPACE ADMINISTRATION LYNDON B. JOHNSON SPACE CENTER HOUSTON, TEXAS
DSGN	V.S. DOGGETT	6/3/81	O_2 REACTANT STORAGE 5 TANK CONFIG OV-105
DR	V.S. DOGGETT	6/3/81	
ENGR	S.R. HIRSHORN		
ENGR	[signature]	10/17/90	
APP	[signature]	10/18/90	
APP			SPACE SHUTTLE
OMNIPLAN	S.L. Kombrecc	11-1-90	OV 105
LTR E	PCN		104.5 X 34

DWG NO 3.2

PAGE SHEET 5 OF 7

BASIC REV E

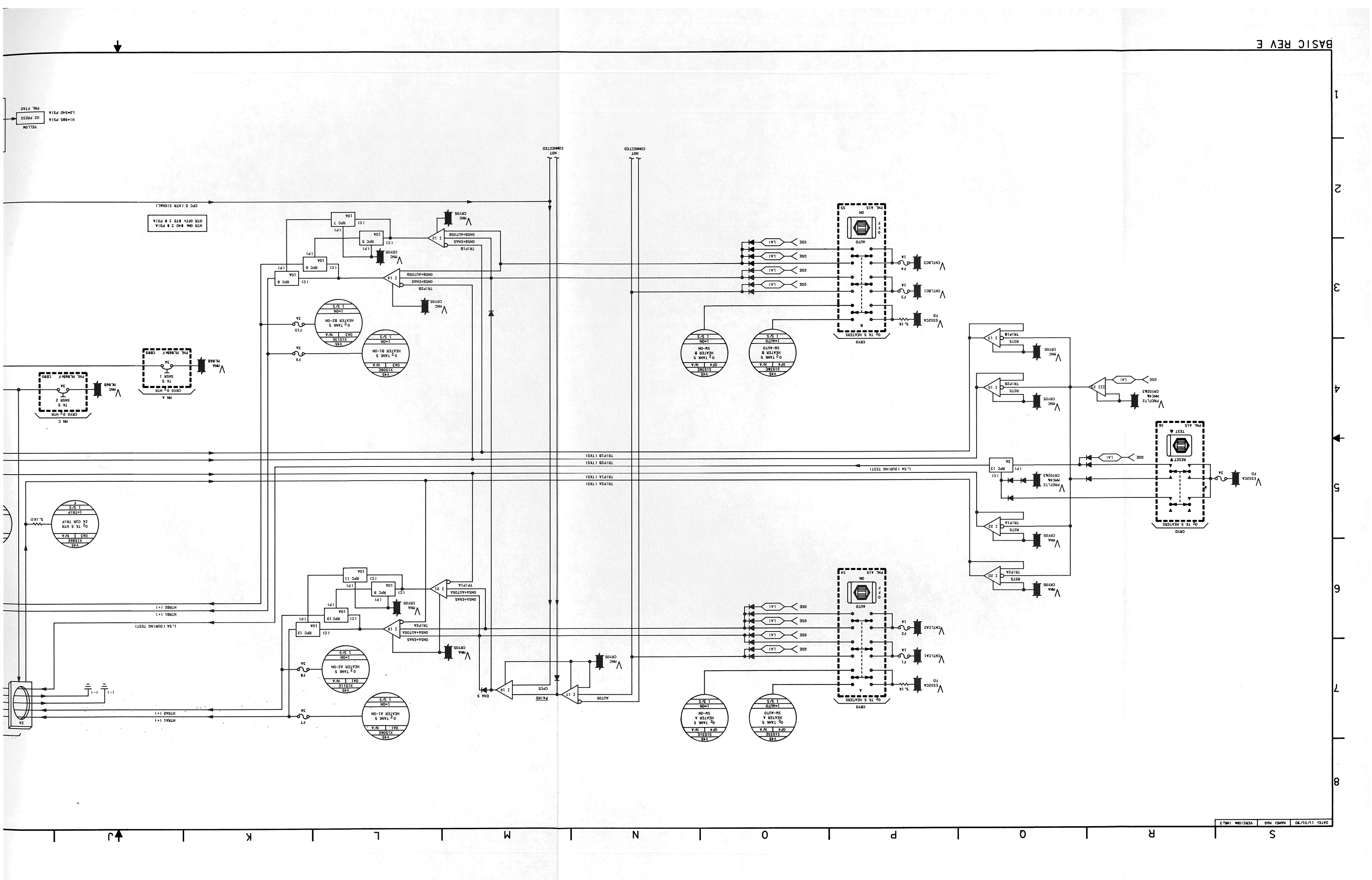
CRO 5 (HTR SIGNAL)
HTR ON= 840 ± 0 PSIA
HTR OFF= 875 ± 0 PSIA
YELLOW
HI=985 PSIA
LO=540 PSIA
O2 PRESS
PNL F7A2
NOT CONNECTED
NOT CONNECTED
TRIP1B (TX5)
TRIP2B (TX5)
TRIP1A (TX5)
TRIP2A (TX5)
1.5A (DURING TEST)
HTRA1 (+)
HTRA2 (+)
HTRB1 (+)
HTRB2 (+)
1.5A (DURING TEST)
PNL A15
PNL A15
PNL A15
PNL A15
O2 TX 5 HEATERS
O2 TX 5 HEATERS
AUTO
ON
OFF
CNTLBC1
CNTLBC2
CNTLCA1
CNTLCA2
ESS2CA
ESS2CB
5.1K
1A
3A
2A
CRYO
CRYO 5
CRYO O2 HTR
PNL A
PNL B
PNL M68AF
PNL M68BF
PNL M68
PNL M69
TX 5 SNSR 1
TX 5 SNSR 2
TX 5 HTR 2A CUR TRIP
TX 5 HTR 1 S/S
TX 5 HTR F
O2 TANK 5 HEATER A1-ON
O2 TANK 5 HEATER A2-ON
O2 TANK 5 HEATER B1-ON
O2 TANK 5 HEATER B2-ON
O2 TANK 5 HEATER A SW-ON
O2 TANK 5 HEATER B SW-ON
O2 TANK 5 HEATER A SW-AUTO
O2 TANK 5 HEATER B SW-AUTO
V46 X15316E
V46 X15316F
V46 X15326E
V46 X15326F
V46 X15336E
V46 X15336F
V46 X15346E
V46 X15346F
1=ON
1=AUTO
1 S/S
OA3 N/A
OB4 N/A
OA1 N/A
OA2 N/A
RPC 5
RPC 6
RPC 7
RPC 8
RPC 9
RPC 10
RPC 11
RPC 12
RPC 13
10A
3A
(C)
(P)
MNC CRYO5
MNA CRYO5
MNB CRYO5
MNC CRYO5
MNA CRYO5
MNB CRYO5
MNC CRYO5
MNA CRYO5
MNB CRYO5
MNC CRYO5
MNA CRYO5
MNB CRYO5
TRIP1B
TRIP2B
TRIP1A
TRIP2A
ONSA+ENA5
ONSA+AUTOSA
ONSB+ENA5
ONSB+AUTOSB
I 12
I 13
I 14
I 15
I 16
I 17
I 18
I 19
I 20
I 21
I 22
RST5
PAIR5
CPC5
ENA 5
AUTO5
PNEFLT2
PRC46
CRY0243
GSE
LA1
TEST
RESET
S
R
Q
P
O
N
M
L
K
J
1
2
3
4
5
6
7
8
DATE: 11/01/90
NAME: MAG
VEMS10#: 1N#3

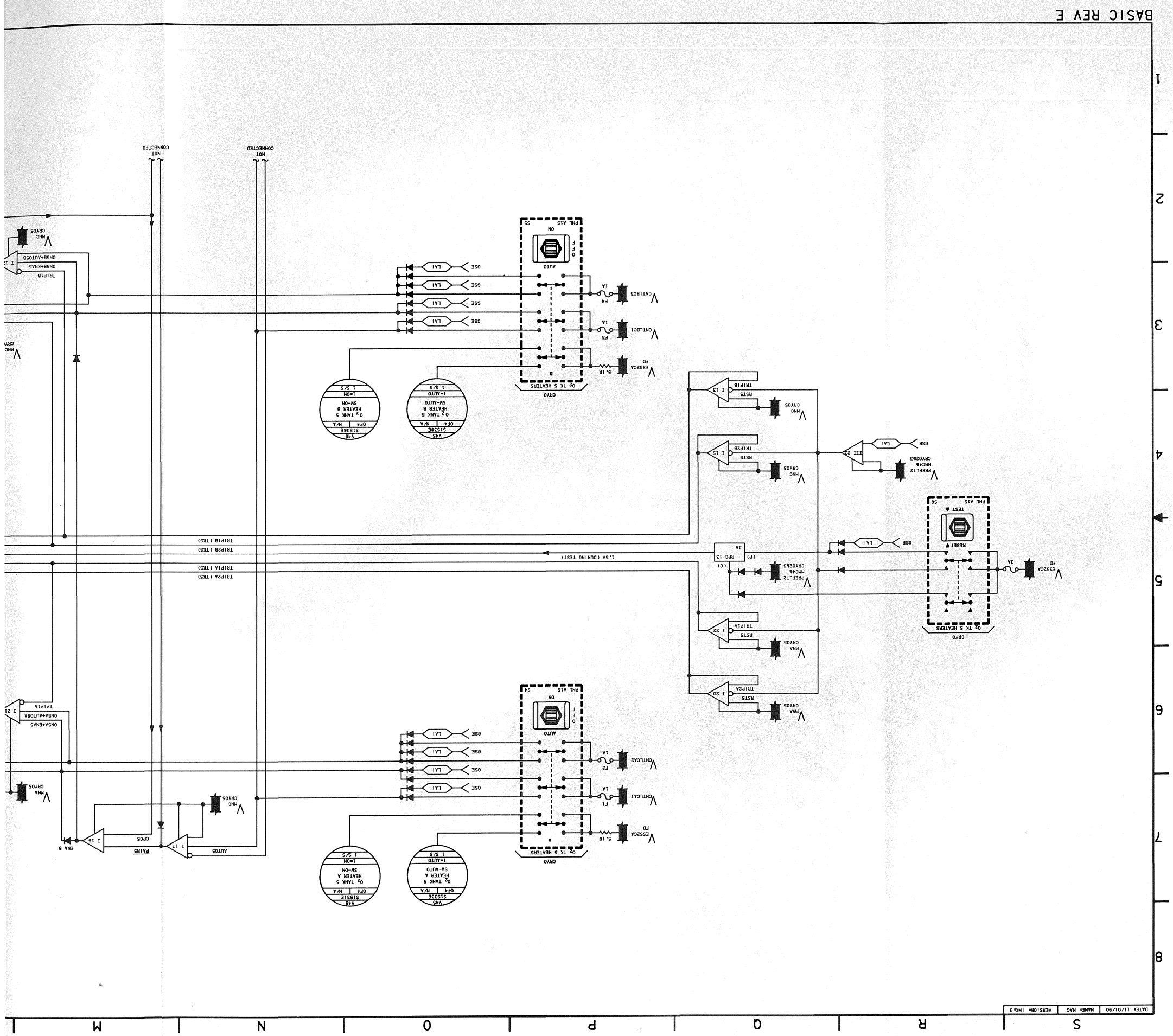
BASIC REV E
DATE: 11/01/90
NAME: MAG
VERSION: ING.3
NOT CONNECTED
TRIP1B
ONS8+ENAS
ONS8+AUTO5B
TRIP1A
ONS4+ENAS
ONS4+AUTO5A
TRIP1A (TX5)
TRIP2A (TX5)
TRIP1B (TX5)
TRIP2B (TX5)
1.5A (DURING TEST)
ENA 5
PAIR5
CPCS
AUTO5
MNC CRYO5
MNA CRYO5
CRYO
O2 TK 5 HEATERS
AUTO
ON
PNL A15
TEST
RESET
GSE
LA1
CNTLBC3
CNTLBC1
CNTLCA2
CNTLCA1
ESS2CA
FD
PREFLT2
MNC4
CRYO2&3
RPC 13
RST5
TRIP1A
TRIP2A
TRIP1B
TRIP2B
V45
515316
O2 TANK 5 HEATER A SW-ON
O2 TANK 5 HEATER A SW-AUTO
O2 TANK 5 HEATER B SW-ON
O2 TANK 5 HEATER B SW-AUTO
1=ON
1=AUTO
1 S/S

DATE: 10/06/90	NAME: CAR	VERSION: INK: 1
DATE: 11/5/91	NAME: PSD	VERSION: INK: 2
DATE: 11/13/91	NAME: PSD	VERSION: INK: 3

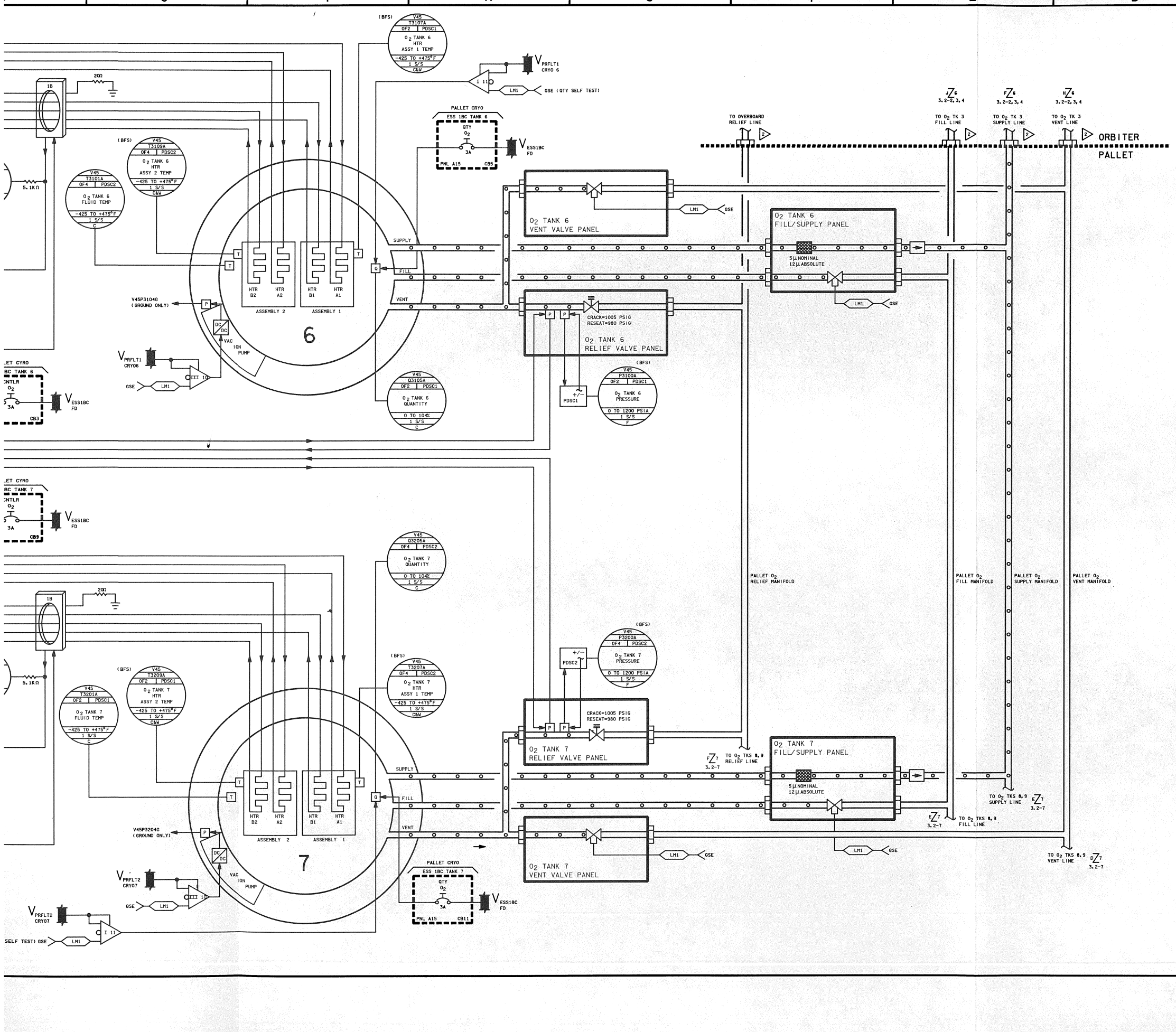

2 FOR OV-102 AND OV-105 FLIGHTS WITHOUT AN EDO PALLET, THESE LINES WILL BE CAPPED

NOTES: 1. REFER TO TABLE 3-1 FOR DRAWING REFERENCES

*2 O_2 CRYO 6

SIGNATURE		DATE	NATIONAL AERONAUTICS AND SPACE ADMINISTRATION LYNDON B. JOHNSON SPACE CENTER HOUSTON, TEXAS
DSGN	V.S. DOGGETT	6/3/81	
DR	V.S. DOGGETT	6/3/81	
ENGR	L.V. MINTER		PALLET O_2 REACTANT TANKS 6 & 7
ENGR	L.V. Minter	11/8/91	
APP	[illegible]	11/8/91	
APP			SPACE SHUTTLE DWG NO 3.2
OMNIPLAN	S.K.Hamblin	11/12/91	EDO: OV102 AND OV105
LTR E	PCN 1		121 X 34 PAGE SHEET 6 OF 7

BASIC REV E-1

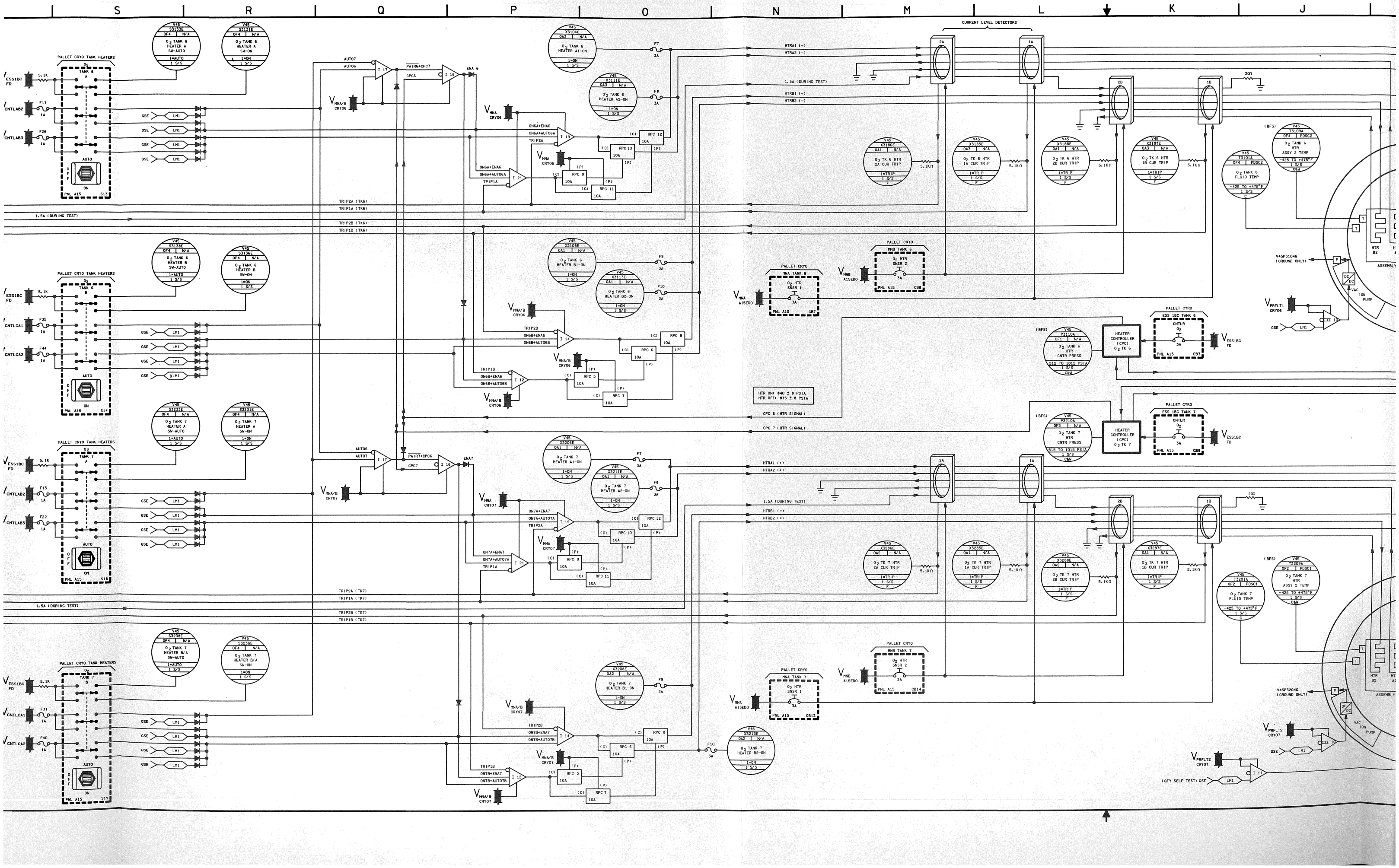
S
R
Q
P
O
N
M
L
K
J
CURRENT LEVEL DETECTORS
PALLET CRYO TANK HEATERS
PALLET CRYO
HEATER CONTROLLER (CPC)
HTR ON: 840 ± 8 PSIA
HTR OFF: 875 ± 8 PSIA
CPC 6 (HTR SIGNAL)
CPC 7 (HTR SIGNAL)
1.5A (DURING TEST)
TRIP2A (TK6)
TRIP1A (TK6)
TRIP2B (TK6)
TRIP1B (TK6)
TRIP2A (TK7)
TRIP1A (TK7)
TRIP2B (TK7)
TRIP1B (TK7)
HTRA1 (+)
HTRA2 (+)
HTRB1 (+)
HTRB2 (+)
ASSEMBLY
(QTY SELF TEST) GSE

DATE: 11/13/91 | NAME: PSD | VERSION: INH-3

BASIC REV E-1

DATE: 10/11/90	NAME: LAM	VERSION NO: 2
DATE: 11/5/91	NAME: PSD	VERSION NO: 3
DATE: 11/13/91	NAME: PSD	VERSION NO: 4

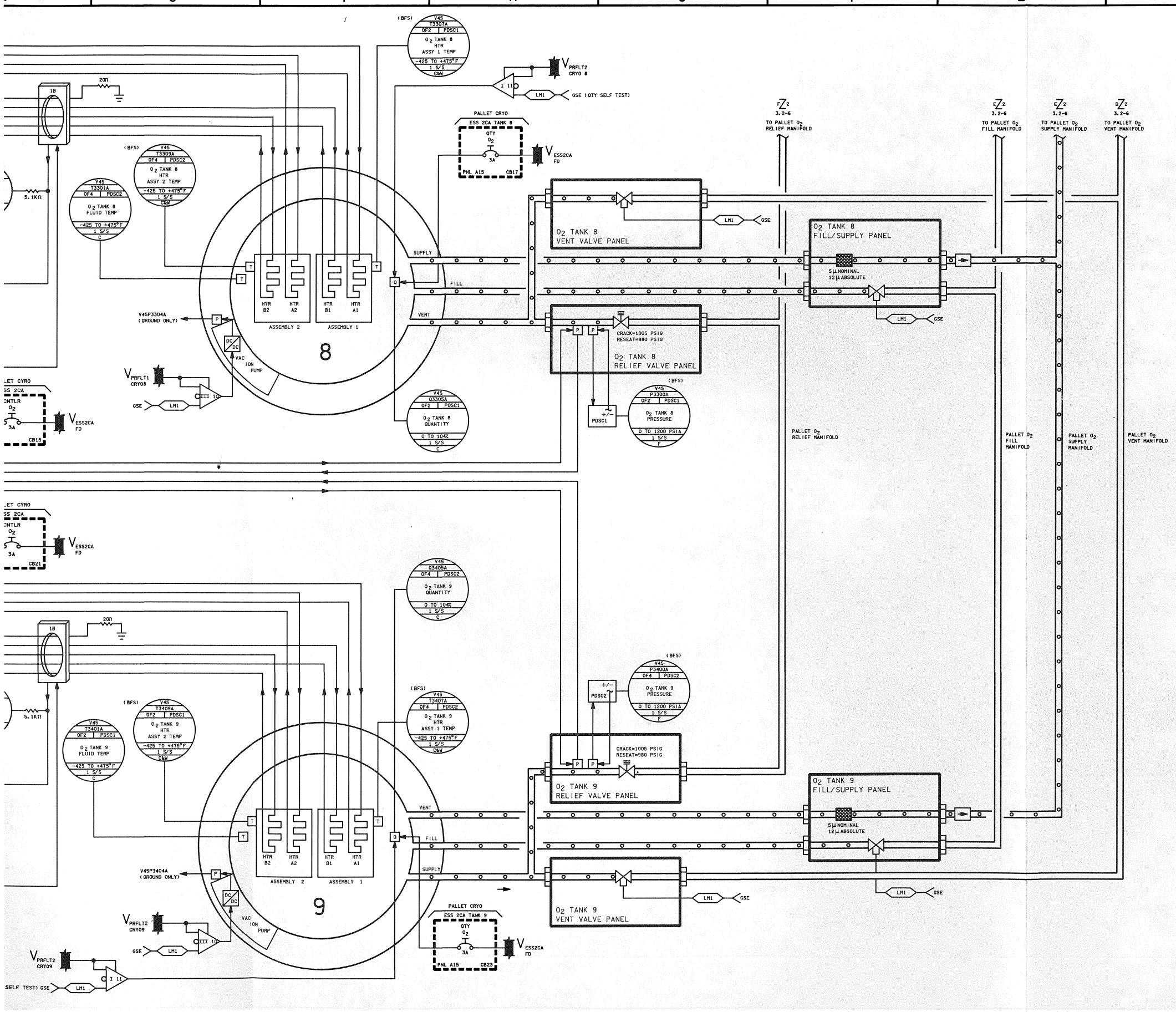

NOTES: 1. REFER TO TABLE 3-I FOR DRAWING REFERENCES

*2 O_2 CRYO 7

SIGNATURE		DATE	NATIONAL AERONAUTICS AND SPACE ADMINISTRATION LYNDON B. JOHNSON SPACE CENTER HOUSTON, TEXAS
DSGN V.S. DOGGETT		6/3/81	
DR V.S. DOGGETT		6/3/81	PALLET O_2 REACTANT TANKS 8 & 9
ENGR R. AL-AYOUBI			
ENGR Rami Al-Ayoubi		11/8/91	
APP Tom Martin		11/8/91	
APP Dan Dodgett		11/8/91	SPACE SHUTTLE
OMNIPLAN S. Al-Ayoubi		11-12-91	EOO: OV102 AND OV105
LTR E	PCN 1		121 X 34

DWG NO 3.2

PAGE SHEET 1 OF 7

BASIC REV E-1

S | R | Q | P | O | N | M | L | K | J

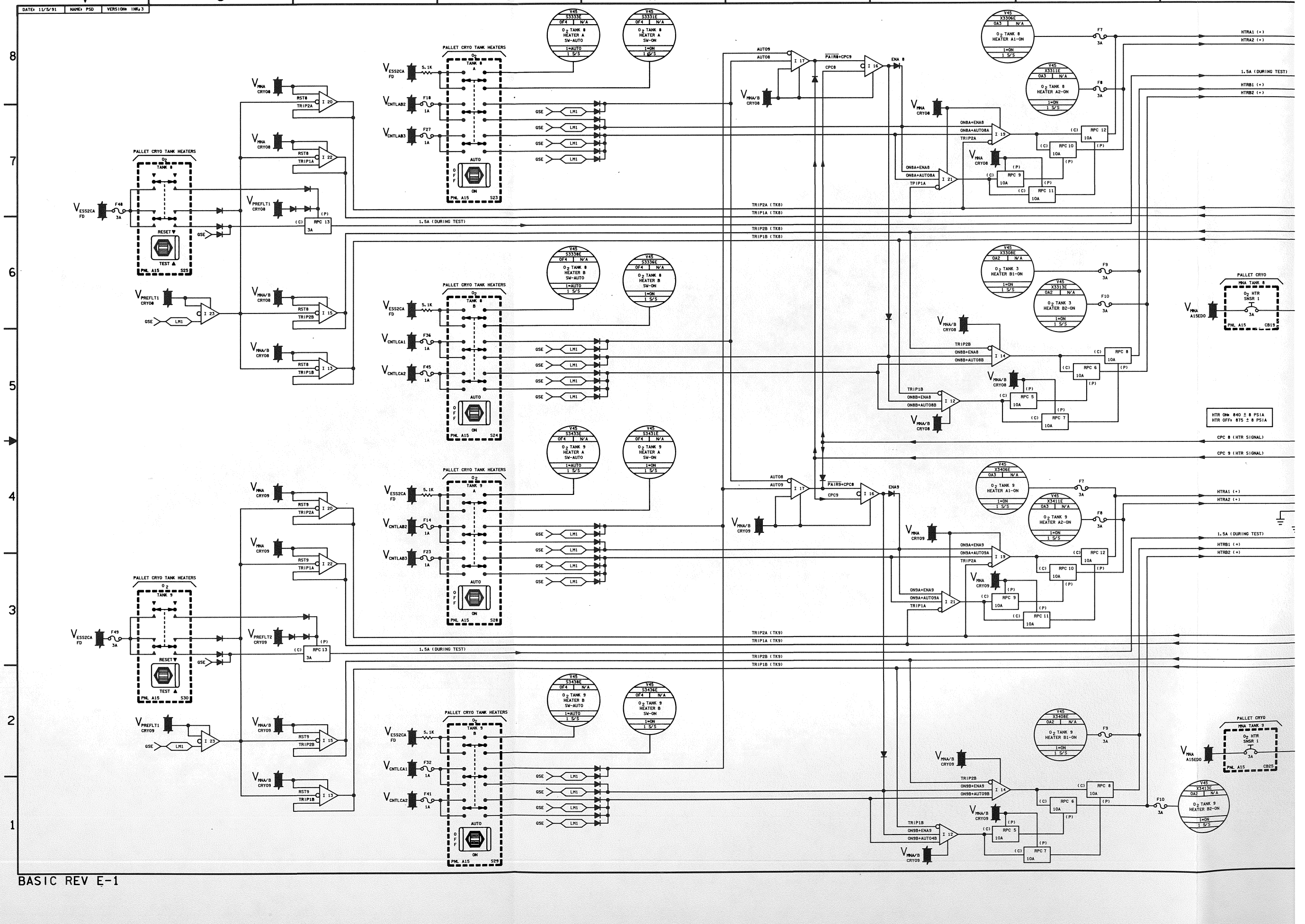
DATE: 11/5/91 NAME: PSD VERSION: INH3
V U T S R Q P O N
8 7 6 5 4 3 2 1
PALLET CRYO TANK HEATERS
O2 TANK 8 A
PNL A15 S23
PALLET CRYO TANK HEATERS
O2 TANK 8 B
PNL A15 S24
PALLET CRYO TANK HEATERS
O2 TANK 9 A
PNL A15 S28
PALLET CRYO TANK HEATERS
O2 TANK 9 B
PNL A15 S29
PALLET CRYO TANK HEATERS
O2 TANK 8
PNL A15 S25
PALLET CRYO TANK HEATERS
O2 TANK 9
PNL A15 S30
V45 S3333E O2 TANK 8 HEATER A SW-AUTO
V45 S3331E O2 TANK 8 HEATER A SW-ON
V45 S3338E O2 TANK 8 HEATER B SW-AUTO
V45 S3336E O2 TANK 8 HEATER B SW-ON
V45 S3433E O2 TANK 9 HEATER A SW-AUTO
V45 S3431E O2 TANK 9 HEATER A SW-ON
V45 S3438E O2 TANK 9 HEATER B SW-AUTO
V45 S3436E O2 TANK 9 HEATER B SW-ON
V45 X3306E O2 TANK 8 HEATER A1-ON
V45 X3311E O2 TANK 8 HEATER A2-ON
V45 X3308E O2 TANK 3 HEATER B1-ON
V45 X3313E O2 TANK 3 HEATER B2-ON
V45 X3406E O2 TANK 9 HEATER A1-ON
V45 X3411E O2 TANK 9 HEATER A2-ON
V45 X3408E O2 TANK 9 HEATER B1-ON
V45 X3413E O2 TANK 9 HEATER B2-ON
PALLET CRYO MNA TANK 8 O2 HTR SNSR 1
PALLET CRYO MNA TANK 9 O2 HTR SNSR 1
HTR ON= 840 ± 8 PSIA
HTR OFF= 875 ± 8 PSIA
1.5A (DURING TEST)
TRIP2A (TK8)
TRIP1A (TK8)
TRIP2B (TK8)
TRIP1B (TK8)
TRIP2A (TK9)
TRIP1A (TK9)
TRIP2B (TK9)
TRIP1B (TK9)
CPC 8 (HTR SIGNAL)
CPC 9 (HTR SIGNAL)
HTRA1 (+)
HTRA2 (+)
HTRB1 (+)
HTRB2 (+)

BASIC REV E-1

DATE: 10/13/90	NAME: JHL	VERSION: INK: 4
DATE: 10/17/91	NAME: JMB	VERSION: BPT: 14
DATE: 10/28/91	NAME: LAM	VERSION: INK: 5

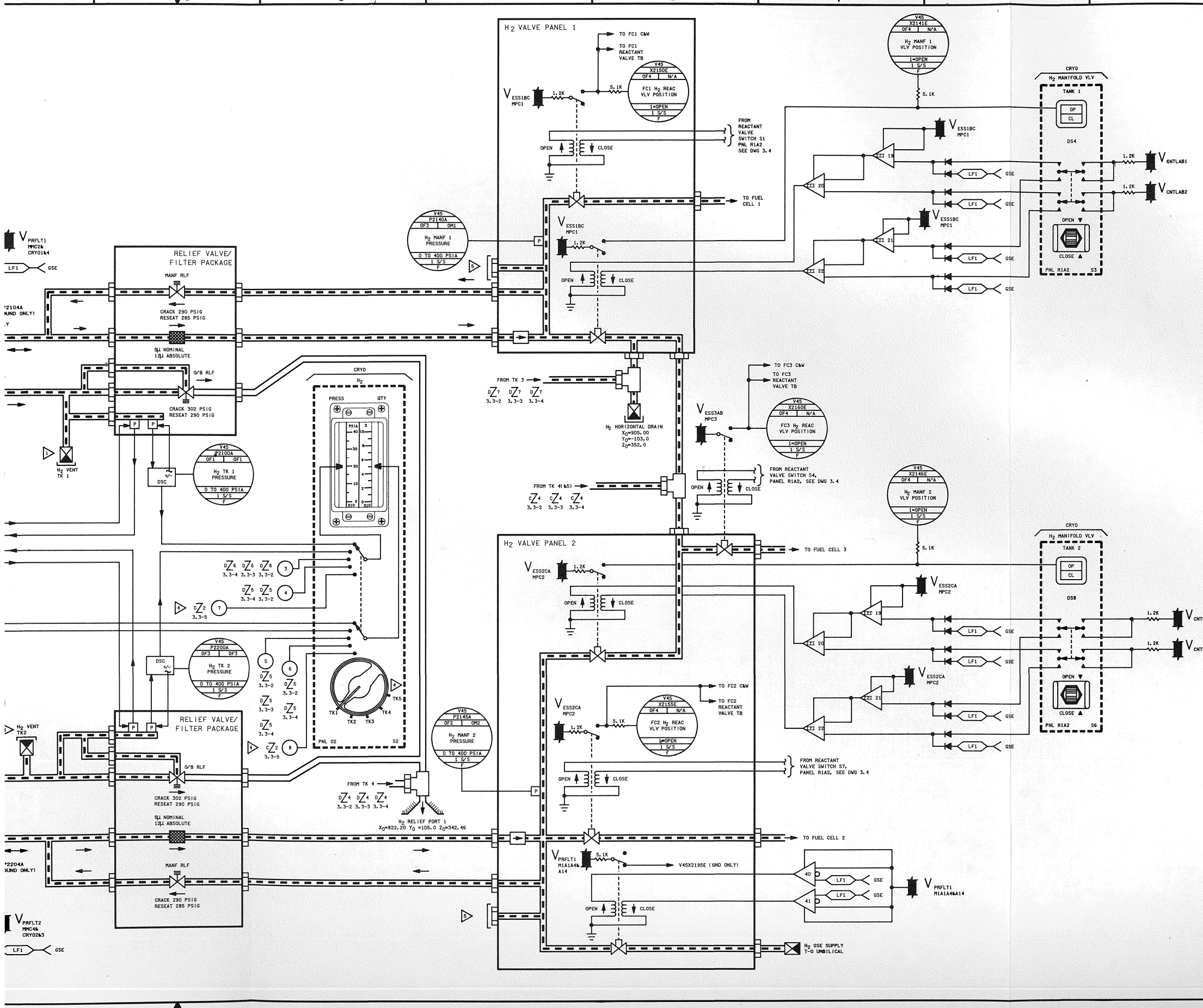

ORBITER PRSD SYSTEM SURFACE PENETRATIONS

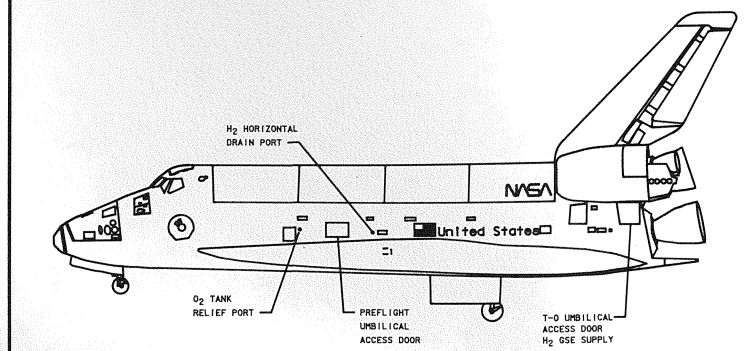

LEFT SIDE VIEW

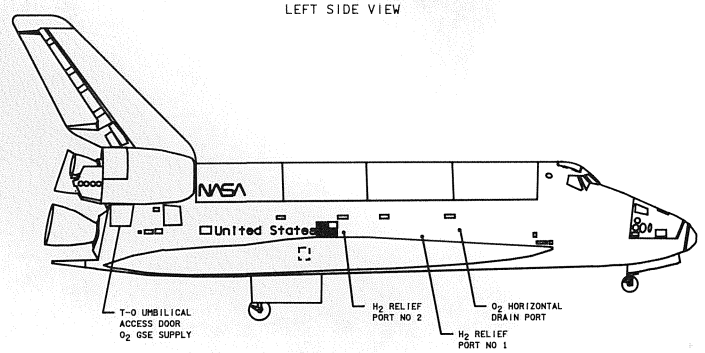

RIGHT SIDE VIEW

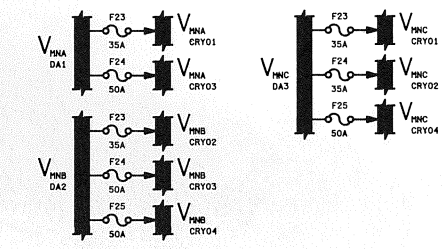

D NOT USED

E 0V 105 ONLY

3. REFER TO TABLE 3-I FOR DRAWING REFERENCES

P DELETED

NOTES: 1. ALL FILL PORTS AND FILL VENTS ARE LOCATED BEHIND THE PREFLIGHT UMBILICAL ACCESS DOOR

5. TYPE I

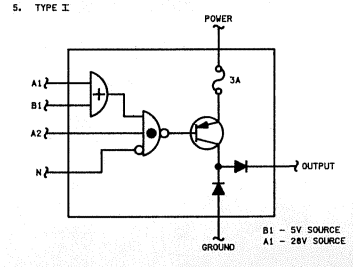

TYPE III

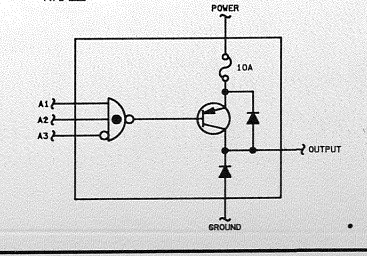

DRAWING APPLICABILITY MATRIX

DWG NUMBERS \ NO OF TANK SETS	2	3	4	5
3.3 SHEET 1	X	X	X	X
3.3 SHEET 2			X	
3.3 SHEET 3		X		
3.3 SHEET 4				X
3.3 SHEET 5				X

*3 H_2 CRYO 1

SIGNATURE		DATE	NATIONAL AERONAUTICS AND SPACE ADMINISTRATION LYNDON B. JOHNSON SPACE CENTER HOUSTON, TEXAS
DSGN	L.H. BUCHANAN	12-13-79	
DR	T.L. FORSYTHE	4-23-81	
ENGR	S.R. HIRSHORN		H_2 REACTANT STORAGE TANKS 1 & 2
ENGR		11/5/91	
APP		11/5/91	
APP			SPACE SHUTTLE
OPN/PLAN	S.K. Kimbrew	11-12-91	ALL
LTR E	PCN 1		104.5 X 34

DWG NO 3.3

PAGE SHEET 1 OF 7

BASIC REV E-1

DATE: 10/29/91 | NAME: LAM | VERSION: INK-5

S R Q P O N M L K J

8 7 6 5 4 3 2 1

CRYO H_2 TK 1 HEATERS A — PNL R1A2 S11
CRYO H_2 TK 1 HEATERS B — PNL R1A2 S12
CRYO H_2 TK 2 HEATERS A — PNL R1A2 S19
CRYO H_2 TK 2 HEATERS B — PNL R1A2 S20

V_{ESS2CA} FD 5.1K; $V_{CNTLCA1}$ F5 1A; $V_{CNTLCA2}$ F6 1A; $V_{CNTLAB1}$ F7 1A; $V_{CNTLAB2}$ F8 1A
V_{ESS1BC} FD 5.1K; $V_{CNTLBC1}$ F13 1A; $V_{CNTLBC2}$ F14 1A; $V_{CNTLBC3}$ F15 1A; $V_{CNTLCA3}$ F16 1A

GSE LA1 ×4 per heater; AUTO OFF ON

V45 S2133E OF4 N/A — H_2 TK 1 HTR A SW-AUTO — 1=AUTO 1 S/S
V45 S2134E OF4 N/A — H_2 TK 1 HTR B SW-AUTO — 1=AUTO 1 S/S
V45 S2233E OF4 N/A — H_2 TK 2 HTR A SW-AUTO — 1=AUTO 1 S/S
V45 S2234E OF4 N/A — H_2 TK 2 HTR B SW-AUTO — 1=AUTO 1 S/S
V45 S2131E OF4 N/A — H_2 TK 1 HTR A SW-ON — 1=ON 1 S/S
V45 S2136E OF4 N/A — H_2 TK 1 HTR B SW-ON — 1=ON 1 S/S
V45 S2231E OF4 N/A — H_2 TK 2 HTR A SW-ON — 1=ON 1 S/S
V45 S2236E OF4 N/A — H_2 TK 2 HTR B SW-ON — 1=ON 1 S/S

V_{MNC} CRYO1; V_{MNA} CRYO1; V_{MNB} CRYO2; V_{MNC} CRYO2

AUTO 1; AUTO 2; $\overline{PAIR1}$ + CPC2; CPC1; ENA1; $\overline{PAIR2}$ + CPC1; CPC2; ENA2

ON1A + ENA1; ON1A + AUTO1A; ON1B + ENA1; ON1B + AUTO1B; ON2A + ENA2; ON2A + AUTO2A; ON2B + ENA2; ON2B + AUTO2B

RPC 1 / RPC 2 / RPC 3 / RPC 4 (C) 5A (P); F1 3A; F2 5A; F5 3A; F6 5A

V45 X2106E OF1 N/A — H_2 TK 1 HEATER A ON — 1=ON 1 S/S
V45 X2108E OF1 N/A — H_2 TK 1 HEATER B ON — 1=ON 1 S/S
V45 X2206E OF3 N/A — H_2 TK 2 HEATER A ON — 1=ON 1 S/S
V45 X2208E OF3 N/A — H_2 TK 2 HEATER B ON — 1=ON 1 S/S

CPC1 (HEATER ON SIGNAL); CPC2 (HEATER ON SIGNAL)

HTR ON: 2033 PSIA
HTR OFF: 2253 PSIA

ESS 2CA CRYO CNTLR — H_2 TK1 3A — PNL 013*D CB15 — V_{ESS2CA} 013&R15
ESS 1BC CRYO CNTLR — H_2 TK2 3A — PNL 013*B CB8 — V_{ESS1BC} 013&R15

HEATER CONTROLLER (CPC) H_2 TK 1
HEATER CONTROLLER (CPC) H_2 TK 2

(BFS) V45 P2110A OF2 N/A — H_2 TK 1 HTR CNTR PRESS — 145 TO 305 PSIA — 1 S/S C & W
(BFS) V45 P2210A OF3 N/A — H_2 TK 2 HTR CNTR PRESS — 145 TO 305 PSIA — 1 S/S C & W

C&W ELECTRONICS CH 50: 60, 70, 80
TK 3; TK 4
YELLOW — H_2 PRESS — PNL FTA2 — HI=294 PSIA LOW=153 PSIA

V45 Q2106A OF3 OF3 — H_2 TK 1 QUANTITY — 0 TO 105% — 1 S/S C
V45 Q2206A OF1 OF1 — H_2 TK 2 QUANTITY — 0 TO 105% — 1 S/S C

V45 T2107A OF1 OM1 — H_2 TK 1 HTR ASSY TEMP — -425 TO +475° F — 1 S/S F
V45 T2101A OF3 OM2 — H_2 TK 1 FLUID TEMP — -425 TO +475° F — 1 S/S C
V45 T2201A OF3 OM1 — H_2 TK 2 FLUID TEMP — -425 TO +475° F — 1 S/S C
V45 T2207A OF2 OM2 — H_2 TK 2 HTR ASSY TEMP — -425 TO +475° F — 1 S/S F

V45 P2100A OF1 OF1 — H_2 TK 1 PRESSURE — 0 TO 400 PSIA — 1 S/S F
V45 P2200A OF3 OF3 — H_2 TK 2 PRESSURE — 0 TO 400 PSIA — 1 S/S F

V_{PRFLT1} MMC2& CRYO1&4; V_{PRFLT2} MMC4& CRYO2&3 — LF1 — GSE (QTY SELF TEST)

ESS 2CA CRYO QTY — H_2 TK1 3A — PNL 013*D CB23 — V_{ESS2CA} 013&R15
ESS 1BC CRYO QTY — H_2 TK2 3A — PNL 013*B CB21 — V_{ESS1BC} 013&R15

H_2 FILL 1; H_2 FILL 2; FILL; VENT; SUPPLY; HTR B; HTR A; 1; 2

H_2 VENT TK 1; H_2 VENT TK2

V45P2104A (GROUND ONLY); V45P2204A (GROUND ONLY)

VAC ION PUMP; DSC

RELIEF VALVE/ FILTER PACKAGE
MANF RLF; CRACK 290 PSIG RESEAT 285 PSIG; 51 NOMINAL 131 ABSOLUTE; G/B RLF; CRACK 302 PSIG RESEAT 290 PSIG

D/6 3.3-4; D/5 3.3-4; D/2 3.3-5

BASIC REV E-1

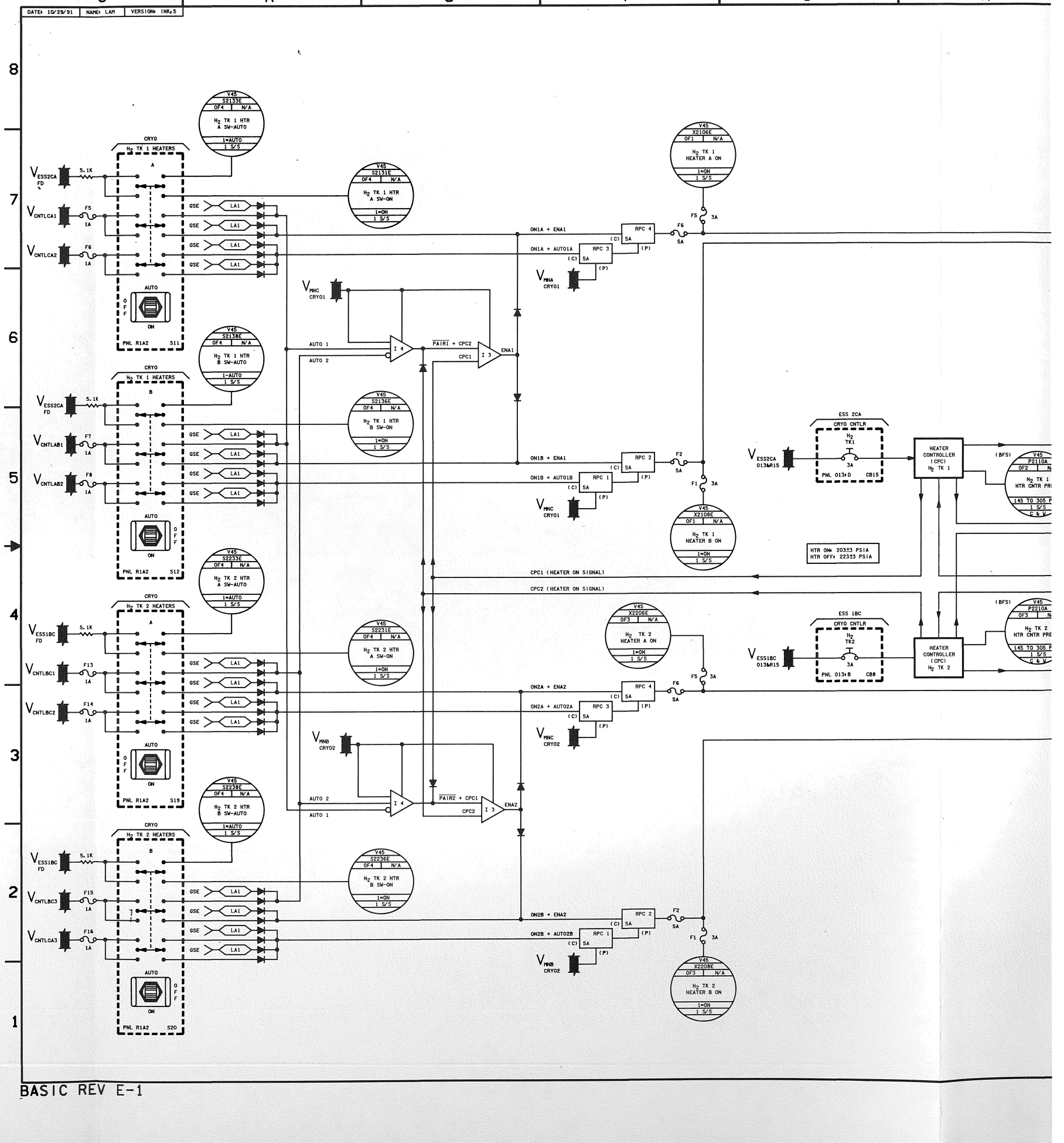
DATE: 10/29/91 NAME: LAM VERSION: INK.5
S R Q P O N
8 7 6 5 4 3 2 1
CRYO H2 TK 1 HEATERS A
CRYO H2 TK 1 HEATERS B
CRYO H2 TK 2 HEATERS A
CRYO H2 TK 2 HEATERS B
V45 52133E H2 TK 1 HTR A SW-AUTO
V45 52131E H2 TK 1 HTR A SW-ON
V45 52138E H2 TK 1 HTR B SW-AUTO
V45 52136E H2 TK 1 HTR B SW-ON
V45 52233E H2 TK 2 HTR A SW-AUTO
V45 52231E H2 TK 2 HTR A SW-ON
V45 52238E H2 TK 2 HTR B SW-AUTO
V45 52236E H2 TK 2 HTR B SW-ON
V45 X2106E H2 TK 1 HEATER A ON
V45 X2108E H2 TK 1 HEATER B ON
V45 X2206E H2 TK 2 HEATER A ON
V45 X2208E H2 TK 2 HEATER B ON
V ESS2CA FD
V ESS1BC FD
V CNTLCA1
V CNTLCA2
V CNTLAB1
V CNTLAB2
V CNTLBC1
V CNTLBC2
V CNTLBC3
V CNTLCA3
5.1K
GSE
LA1
AUTO ON OFF
PNL R1A2 S11
PNL R1A2 S12
PNL R1A2 S19
PNL R1A2 S20
V MNC CRYO1
V MNA CRYO1
V MNB CRYO2
V MNC CRYO2
AUTO 1
AUTO 2
I 4
I 3
PAIR1 + CPC2
CPC1
ENA1
PAIR2 + CPC1
CPC2
ENA2
ON1A + ENA1
ON1A + AUTO1A
ON1B + ENA1
ON1B + AUTO1B
ON2A + ENA2
ON2A + AUTO2A
ON2B + ENA2
ON2B + AUTO2B
RPC 4
RPC 3
RPC 2
RPC 1
(C) 5A
(P)
F5 3A
F6 5A
F2 5A
F1 3A
CPC1 (HEATER ON SIGNAL)
CPC2 (HEATER ON SIGNAL)
ESS 2CA CRYO CNTLR H2 TK1 3A PNL 013+D CB15
ESS 1BC CRYO CNTLR H2 TK2 3A PNL 013+B CB8
V ESS2CA 0136R15
V ESS1BC 0136R15
HEATER CONTROLLER (CPC) H2 TK 1
HEATER CONTROLLER (CPC) H2 TK 2
HTR ON= 20383 PSIA
HTR OFF= 22383 PSIA
(BFS)
V45 P2210A H2 TK 1 HTR CNTR PRE
V45 P2210A H2 TK 2 HTR CNTR PRE
145 TO 305 P
1 S/S
6 & V

BASIC REV E-1

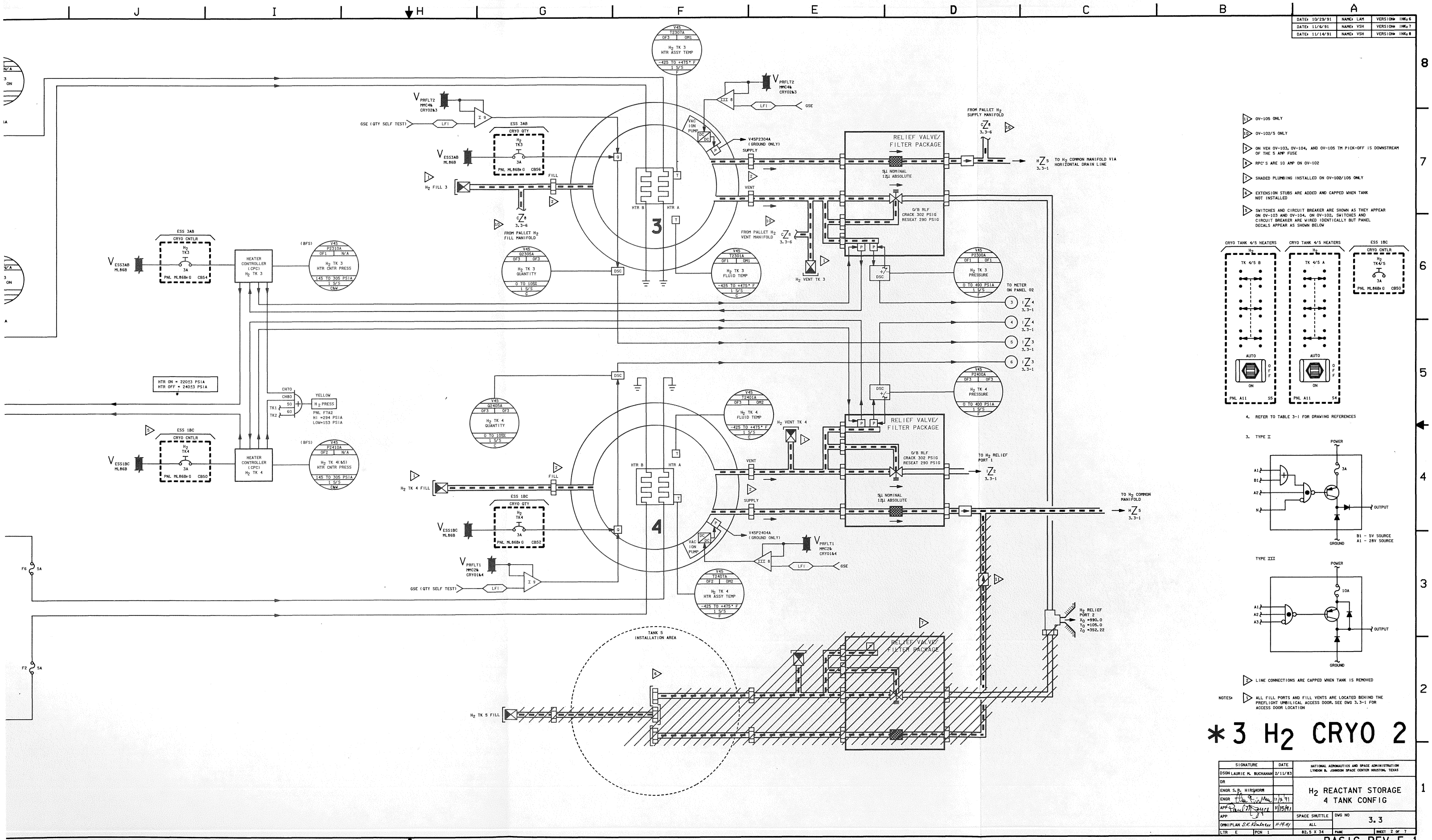

DATE: 10/29/91	NAME: LAM	VERSION: INK 6
DATE: 11/6/91	NAME: VSH	VERSION: INK 7
DATE: 11/14/91	NAME: VSH	VERSION: INK 8

11 OV-105 ONLY

10 OV-102/5 ONLY

9 ON VEH OV-103, OV-104, AND OV-105 TM PICK-OFF IS DOWNSTREAM OF THE 5 AMP FUSE

8 RPC'S ARE 10 AMP ON OV-102

7 SHADED PLUMBING INSTALLED ON OV-102/105 ONLY

6 EXTENSION STUBS ARE ADDED AND CAPPED WHEN TANK NOT INSTALLED

5 SWITCHES AND CIRCUIT BREAKER ARE SHOWN AS THEY APPEAR ON OV-103 AND OV-104. ON OV-102, SWITCHES AND CIRCUIT BREAKER ARE WIRED IDENTICALLY BUT PANEL DECALS APPEAR AS SHOWN BELOW

4. REFER TO TABLE 3-1 FOR DRAWING REFERENCES

3. TYPE I

TYPE III

2 LINE CONNECTIONS ARE CAPPED WHEN TANK IS REMOVED

NOTES: 1 ALL FILL PORTS AND FILL VENTS ARE LOCATED BEHIND THE PREFLIGHT UMBILICAL ACCESS DOOR. SEE DWG 3.3-1 FOR ACCESS DOOR LOCATION

*3 H_2 CRYO 2

SIGNATURE	DATE	NATIONAL AERONAUTICS AND SPACE ADMINISTRATION LYNDON B. JOHNSON SPACE CENTER HOUSTON, TEXAS
DSGN LAURIE M. BUCHANAN	2/11/83	
DR		H_2 REACTANT STORAGE 4 TANK CONFIG
ENGR S.R. HIRSHORN		
ENGR [signature]	11/15/91	
APP [signature]	11/15/91	
APP		SPACE SHUTTLE ALL — DWG NO 3.3
OMNIPLAN S.K. Kimbrell	11-19-91	
LTR E — PCN 1		82.5 X 34 — PAGE — SHEET 2 OF 7

BASIC REV E-1

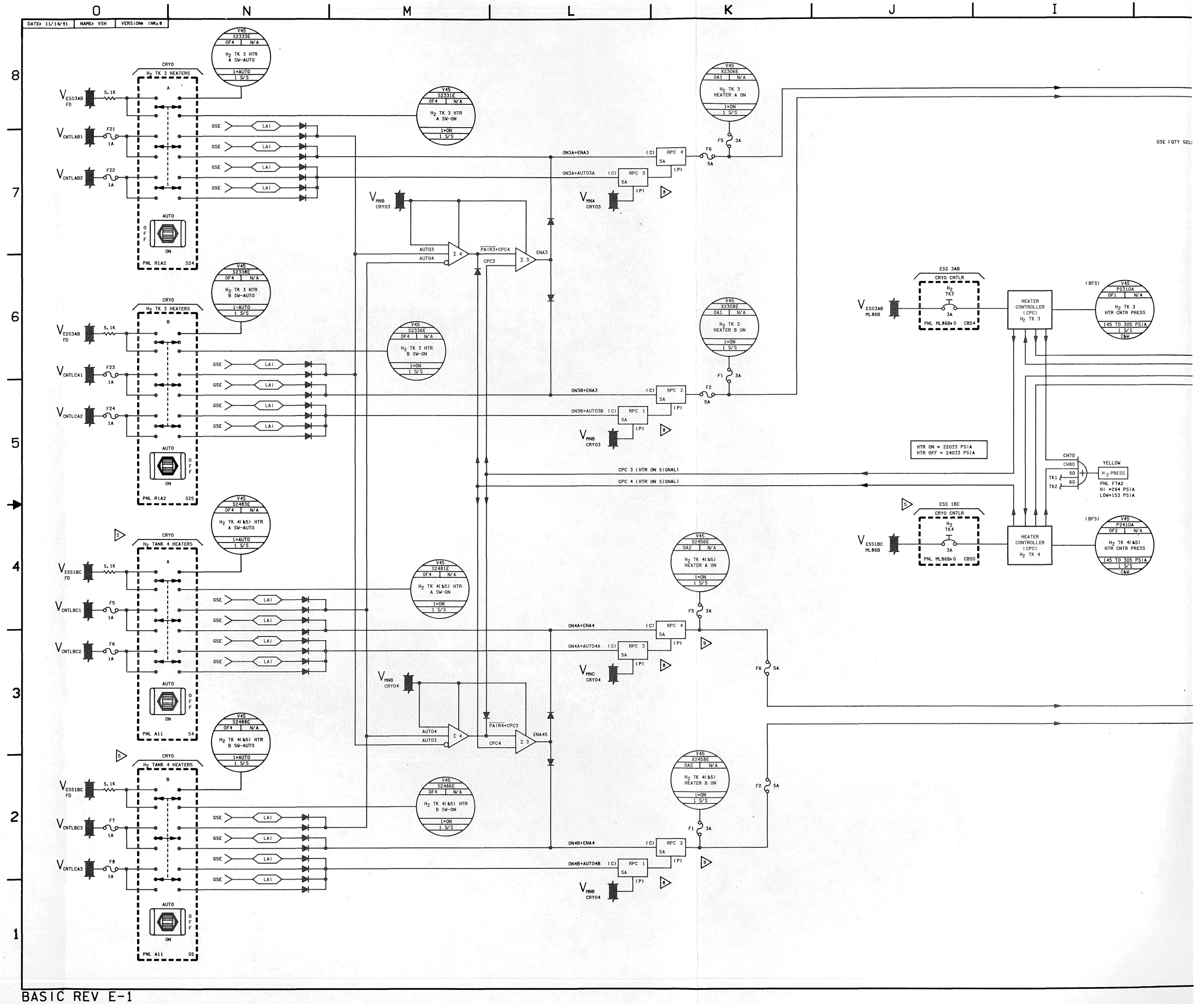
DATE: 11/14/91
NAME: VSH
VERSION: INK: 8
O
N
M
L
K
J
I
8
7
6
5
4
3
2
1
CRYO
H2 TK 3 HEATERS
A
B
V45 S2333E OF4 N/A H2 TK 3 HTR A SW-AUTO 1=AUTO 1 S/S
V45 S2331E OF4 N/A H2 TK 3 HTR A SW-ON 1=ON 1 S/S
V45 S2338E OF4 N/A H2 TK 3 HTR B SW-AUTO 1=AUTO 1 S/S
V45 S2336E OF4 N/A H2 TK 3 HTR B SW-ON 1=ON 1 S/S
V45 S2483E OF4 N/A H2 TK 4(&5) HTR A SW-AUTO 1=AUTO 1 S/S
V45 S2481E OF4 N/A H2 TK 4(&5) HTR A SW-ON 1=ON 1 S/S
V45 S2488E OF4 N/A H2 TK 4(&5) HTR B SW-AUTO 1=AUTO 1 S/S
V45 S2486E OF4 N/A H2 TK 4(&5) HTR B SW-ON 1=ON 1 S/S
V45 X2308E OA1 N/A H2 TK 3 HEATER A ON 1=ON 1 S/S
V45 X2308E OA1 N/A H2 TK 3 HEATER B ON 1=ON 1 S/S
V45 X2456E OA2 N/A H2 TK 4(&5) HEATER A ON 1=ON 1 S/S
V45 X2458E OA2 N/A H2 TK 4(&5) HEATER B ON 1=ON 1 S/S
V ESS3AB FD
V ESS1BC FD
5.1K
V CNTLAB1
V CNTLAB2
V CNTLCA1
V CNTLCA2
V CNTLBC1
V CNTLBC2
V CNTLBC3
V CNTLCA3
F21 1A
F22 1A
F23 1A
F24 1A
F5 1A
F6 1A
F7 1A
F8 1A
GSE
LAI
AUTO
OFF
ON
PNL R1A2 S24
PNL R1A2 S25
PNL A11 S4
PNL A11 S5
V MNB CRY03
V MNA CRY03
V MNB CRY04
V MNC CRY04
ON3A+ENA3
ON3A+AUTO3A
ON3B+ENA3
ON3B+AUTO3B
ON4A+ENA4
ON4A+AUTO4A
ON4B+ENA4
ON4B+AUTO4B
RPC 4
RPC 3
RPC 2
RPC 1
5A
(C)
(P)
F6 5A
F5 3A
F1 3A
F2 5A
AUTO3
AUTO4
PAIR3+CPC4
PAIR4+CPC3
CPC3
CPC4
ENA3
ENA45
I 4
I 3
CPC 3 (HTR ON SIGNAL)
CPC 4 (HTR ON SIGNAL)
GSE (QTY SEL
ESS 3AB
CRYO CNTLR
H2 TK3
3A
PNL ML86B4 G CB54
V ESS3AB ML86B
HEATER CONTROLLER (CPC) H2 TK 3
(BFS)
V45 P2410A OF1 N/A H2 TK 3 HTR CNTR PRESS 145 TO 305 PSIA 1 S/S CB4
HTR ON = 220±3 PSIA
HTR OFF = 240±3 PSIA
CH10
CH80
50
60
TK1
TK2
YELLOW
H2 PRESS
PNL F7A2
HI =294 PSIA
LOW=153 PSIA
ESS 1BC
CRYO CNTLR
H2 TK4
3A
PNL ML86B4 G CB50
V ESS1BC ML86B
HEATER CONTROLLER (CPC) H2 TK 4
V45 P2410A OF2 N/A H2 TK 4(&5) HTR CNTR PRESS 145 TO 305 PSIA 1 S/S CB4Y

BASIC REV E-1

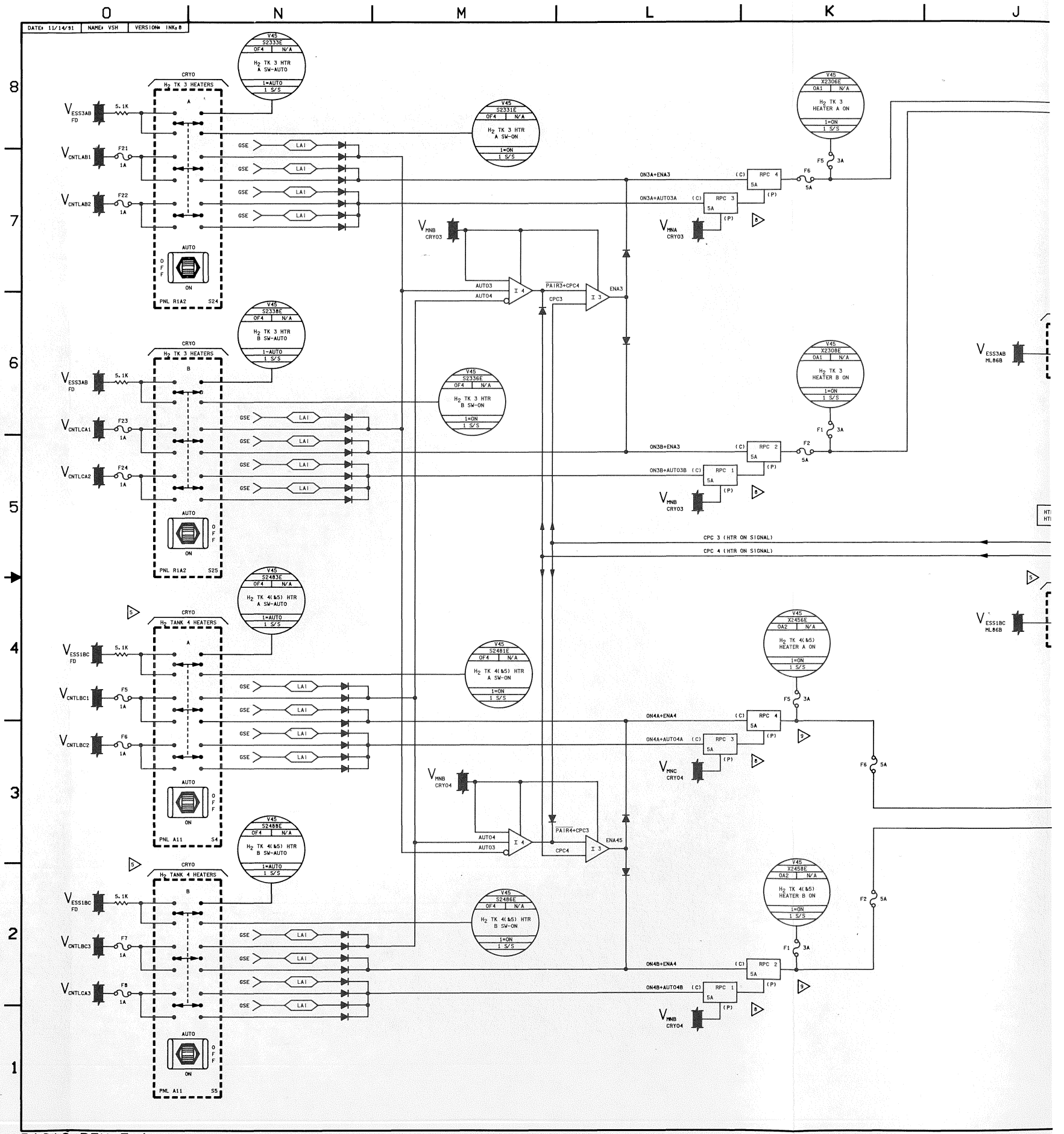
DATE: 11/14/91
NAME: VSH
VERSION: INK.8
CRYO
H2 TK 3 HEATERS
A
B
H2 TANK 4 HEATERS
V45 S2333E H2 TK 3 HTR A SW-AUTO
V45 S2331E H2 TK 3 HTR A SW-ON
V45 S2338E H2 TK 3 HTR B SW-AUTO
V45 S2336E H2 TK 3 HTR B SW-ON
V45 S2483E H2 TK 4(&5) HTR A SW-AUTO
V45 S2481E H2 TK 4(&5) HTR A SW-ON
V45 S2489E H2 TK 4(&5) HTR B SW-AUTO
V45 S2486E H2 TK 4(&5) HTR B SW-ON
V45 X2306E H2 TK 3 HEATER A ON
V45 X2308E H2 TK 3 HEATER B ON
V45 X2456E H2 TK 4(&5) HEATER A ON
V45 X2458E H2 TK 4(&5) HEATER B ON
AUTO
ON
OFF
GSE
LAI
PNL R1A2 S24
PNL R1A2 S25
PNL A11 S4
PNL A11 S5
VESS3AB FD
VESS3AB ML86B
VESS1BC FD
VESS1BC ML86B
VCNTLAB1
VCNTLAB2
VCNTLBC1
VCNTLBC2
VCNTLCA1
VCNTLCA2
VCNTLBC3
VCNTLCA3
5.1K
F21 1A
F22 1A
F23 1A
F24 1A
F5 1A
F6 1A
F7 1A
F8 1A
VMNB CRYO3
VMNA CRYO3
VMNB CRYO4
VMNC CRYO4
AUT03
AUT04
PAIR3+CPC4
CPC3
ENA3
PAIR4+CPC3
CPC4
ENA45
I 4
I 3
ON3A+ENA3
ON3A+AUTO3A
ON3B+ENA3
ON3B+AUTO3B
ON4A+ENA4
ON4A+AUTO4A
ON4B+ENA4
ON4B+AUTO4B
RPC 4
RPC 3
RPC 2
RPC 1
5A
(C)
(P)
F5 3A
F6 5A
F1 3A
F2 5A
CPC 3 (HTR ON SIGNAL)
CPC 4 (HTR ON SIGNAL)

BASIC REV E-1

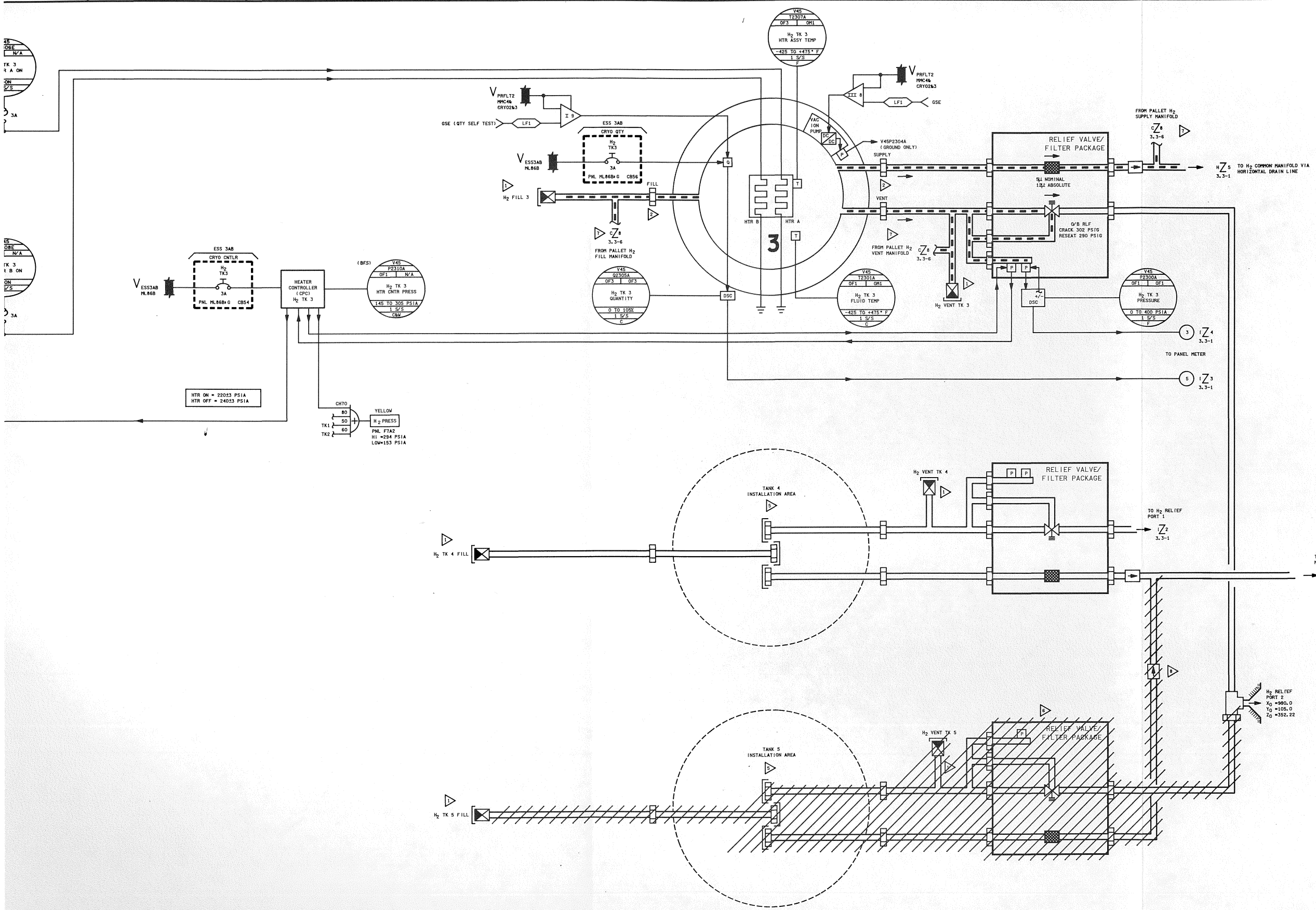

DATE: 10/29/91	NAME: LAM	VERSION: INK;5
DATE: 11/6/91	NAME: VSH	VERSION: INK;6
DATE: 11/14/91	NAME: VSH	VERSION: INK;7

8. OV-105 ONLY
7. OV-102/5 ONLY
6. SHADED PLUMBING INSTALLED ON OV-102/105 ONLY
5. EXTENSION STUBS ARE ADDED AND CAPPED WHEN TANK NOT INSTALLED
4. REFER TO TABLE 3-1 FOR DRAWING REFERENCES
3. TYPE I

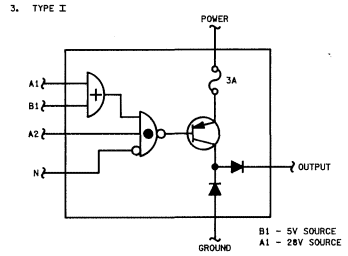

TYPE III

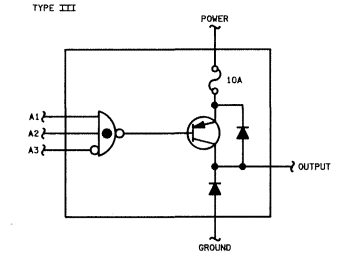

2. LINE CONNECTIONS ARE CAPPED WHEN TANK IS REMOVED

NOTES: 1. ALL FILL PORTS AND FILL VENTS ARE LOCATED BEHIND THE PREFLIGHT UMBILICAL ACCESS DOOR. SEE DWG 3.3-1 FOR ACCESS DOOR LOCATION

*3 H_2 CRYO 3

SIGNATURE	DATE	NATIONAL AERONAUTICS AND SPACE ADMINISTRATION LYNDON B. JOHNSON SPACE CENTER HOUSTON, TEXAS
DSGN LAURIE M. BUCHANAN	2/11/83	
DR		H_2 REACTANT STORAGE 3 TANK CONFIGURATION
ENGR S.R. HIRSHORN		
ENGR [signature]	11/15/91	
APP [signature]	11/15/91	
APP [signature]		SPACE SHUTTLE
OMNIPLAN S.K. Kimbrow	11-19-91	ALL
LTR E	PCN 1	82.5 X 34

DWG NO 3.3

PAGE SHEET 3 OF 7

BASIC REV E-1

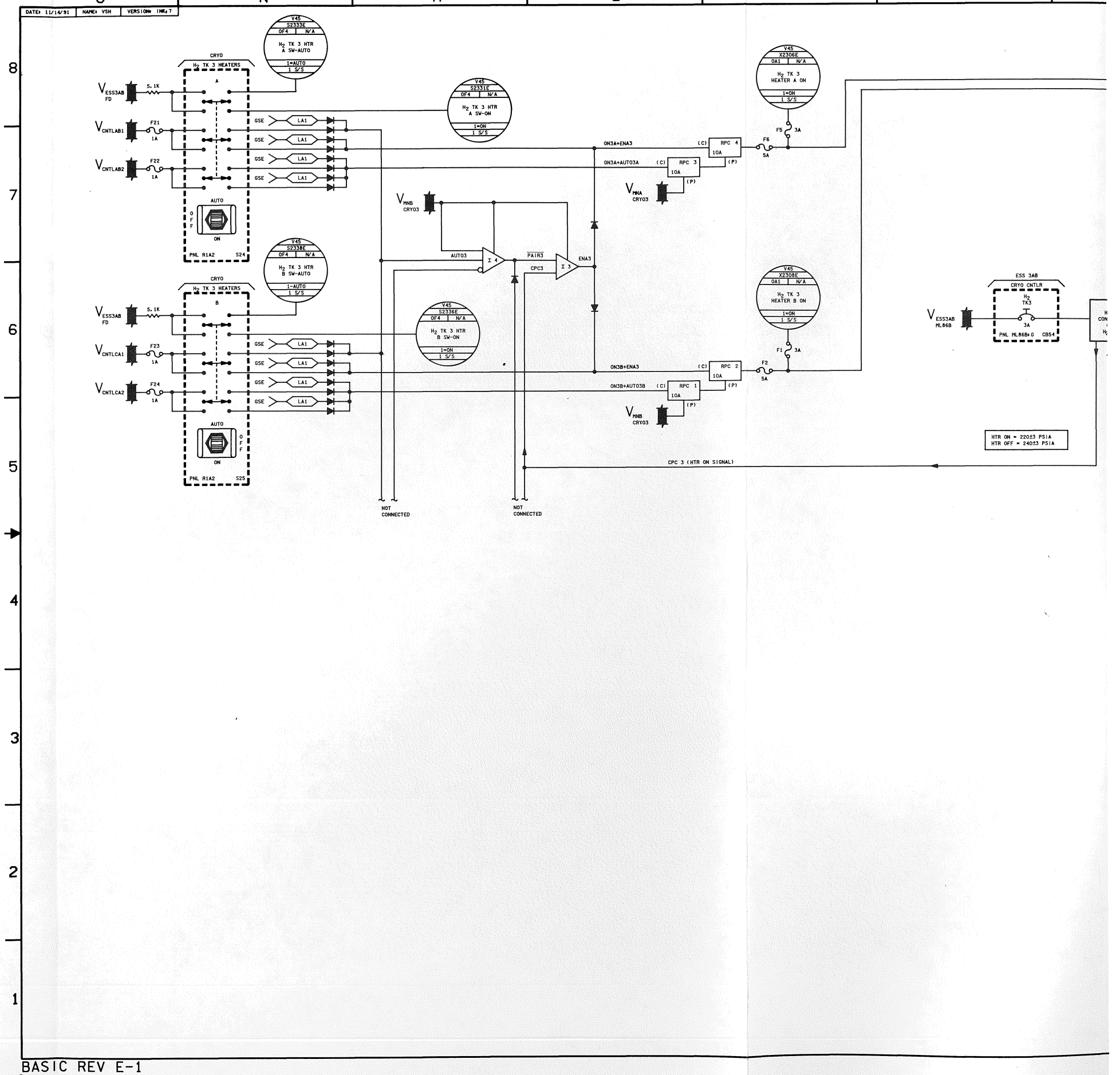

DATE: 11/14/91
NAME: VSH
VERSION: INK, 7
O
N
M
L
K
J
8
7
6
5
4
3
2
1
V45 S2333E
OF4 N/A
H2 TK 3 HTR A SW-AUTO
1=AUTO
1 S/S
V45 S2331E
OF4 N/A
H2 TK 3 HTR A SW-ON
1=ON
1 S/S
V45 S2338E
OF4 N/A
H2 TK 3 HTR B SW-AUTO
1=AUTO
1 S/S
V45 S2336E
OF4 N/A
H2 TK 3 HTR B SW-ON
1=ON
1 S/S
V45 X2306E
OA1 N/A
H2 TK 3 HEATER A ON
1=ON
1 S/S
V45 X2308E
OA1 N/A
H2 TK 3 HEATER B ON
1=ON
1 S/S
CRYO
H2 TK 3 HEATERS
A
B
AUTO
OFF
ON
PNL R1A2 S24
PNL R1A2 S25
VESS3AB FD
VCNTLAB1
VCNTLAB2
VCNTLCA1
VCNTLCA2
5.1K
F21 1A
F22 1A
F23 1A
F24 1A
GSE
LA1
VMNB CRYO3
VMNA CRYO3
AUTO3
PAIR3
CPC3
ENA3
ON3A+ENA3
ON3A+AUTO3A
ON3B+ENA3
ON3B+AUTO3B
RPC 1
RPC 2
RPC 3
RPC 4
10A
(C)
(P)
F1 3A
F2 5A
F5 3A
F6 5A
ESS 3AB
CRYO CNTLR
H2 TK3
3A
PNL ML86B+G CB54
VESS3AB ML86B
HTR ON = 220±3 PSIA
HTR OFF = 240±3 PSIA
CPC 3 (HTR ON SIGNAL)
NOT CONNECTED
NOT CONNECTED

BASIC REV E-1

DATE: 10/18/90	NAME: MDU	VERSION: INK, 1
DATE: 10/17/91	NAME: JMB	VERSION: BPT, 15
DATE: 10/29/91	NAME: LAM	VERSION: INK, 2

J I H G F E D C B A

8 7 6 5 4 3 2 1

ESS 3AB CRYO CNTLR — H_2 TK3 — 3A — PNL ML86B+G CB54 — V_{ESS3AB} ML86B

HEATER CONTROLLER (CPC) H_2 TK 3

(BFS) V45 P2310A — H_2 TK 3 HTR CNTR PRESS — 145 TO 305 PSIA — 1 S/S — C&W

HTR ON = 220±3 PSIA
HTR OFF = 240±3 PSIA

CH70 / CH80 — 50 / 60 — TK1 / TK2 — YELLOW H_2 PRESS — PNL F7A2 — HI =294 PSIA LOW=153 PSIA

ESS 1BC CRYO CNTLR — H_2 TK4/5 — 3A — PNL ML86B+G CB50 — V_{ESS1BC} ML86B

HEATER CONTROLLER (CPC) H_2 TK 4/5

(BFS) V45 P2410A — H_2 TK 4(&5) HTR CNTR PRESS — 145 TO 305 PSIA — 1 S/S — C&W

F14 5A F6 5A F2 5A F13 5A

V45 T2307A — H_2 TK 3 HTR ASSY TEMP — -425 TO +475° F — 1 S/S — F

V_{PRFLT2} MMC4& CRY02&3 — LF1 — GSE (QTY SELF TEST) — Σ 9

ESS 3AB CRYO QTY — H_2 TK3 — 3A — PNL ML86B+G CB56 — V_{ESS3AB} ML86B

H_2 FILL 3 — FILL — 3.3-6 — FROM PALLET H_2 FILL MANIFOLD

HTR B / HTR A / 3 / T / Q / DSC

VAC ION PUMP — DC — V45P2304A (GROUND ONLY)

SUPPLY / VENT

RELIEF VALVE/ FILTER PACKAGE — 5μ NOMINAL 1μ ABSOLUTE — Q/B RLF CRACK 302 PSIG RESEAT 290 PSIG

FROM PALLET H_2 SUPPLY MANIFOLD — 3.3-6

TO H_2 COMMON MANIFOLD VIA HORIZONTAL DRAIN LINE — 3.3-1

FROM PALLET H_2 VENT MANIFOLD — 3.3-6

H_2 VENT TK 3

V45 T2301A — H_2 TK 3 FLUID TEMP — -425 TO +475° F — 1 S/S — C

V45 P2300A — H_2 TK 3 PRESSURE — 0 TO 400 PSIA — 1 S/S — F

TO METER ON PANEL O2 — 3 / 4 / 5 / 6 — 3.3-1

V45 P2400A — H_2 TK 4 PRESSURE — 0 TO 400 PSIA — 1 S/S — F

V45 Q2405A — H_2 TK 4 QUANTITY — 0 TO 100% — 1 S/S — C

V45 T2401A — H_2 TK 4 FLUID TEMP — -425 TO +475° F — 1 S/S — C

H_2 VENT TK 4

HTR B / HTR A / 4 / T / Q / DSC

VAC ION PUMP — DC — V45P2404A (GROUND ONLY)

V_{PRFLT1} MMC2& CRY01&4 — LF1 — GSE

V45 T2407A — H_2 TK 4 HTR ASSY TEMP — -425 TO +475° F — 1 S/S — F

ESS 1BC CRYO QTY — H_2 TK4 — 3A — PNL ML86B+G CB52 — V_{ESS1BC} ML86B

H_2 TK 4 FILL — FILL — 3.3-6

V_{PRFLT1} MMC2& CRY01&4 — LF1 — GSE (QTY SELF TEST)

RELIEF VALVE/ FILTER PACKAGE — 5μ NOMINAL 1μ ABSOLUTE — Q/B RLF CRACK 302 PSIG RESEAT 290 PSIG

TO H_2 RELIEF PORT 1 — 3.3-1

TO H_2 COMMON MANIFOLD — 3.3-1

V45 P2500A — H_2 TK 5 PRESSURE — 0 TO 400 PSIA — 1 S/S — F

H_2 RELIEF PORT 2 — X_O =990.0 Y_O =105.0 Z_O =352.22

V45 T2501A — H_2 TK 5 FLUID TEMP — -425 TO +475° F — 1 S/S — C

H_2 VENT TK 5

V45 Q2505A — H_2 TK 5 QUANTITY — 0 TO 100% — 1 S/S — C

HTR B / HTR A / 5 / T / Q / DSC

VAC ION PUMP — DC — V45P2504A (GROUND ONLY)

ESS 2CA CRYO QTY — H_2 TK5 — 3A — PNL ML86B+G CB84 — V_{ESS2CA} ML86B

H_2 TK 5 FILL — FILL

V45 T2507A — H_2 TK 5 HTR ASSY TEMP — -425 TO +475° F — 1 S/S — F

RELIEF VALVE/ FILTER PACKAGE — 5μ NOMINAL 1μ ABSOLUTE — Q/B RLF CRACK 302 PSIG RESEAT 290 PSIG

4. REFER TO TABLE 3-I FOR DRAWING REFERENCES
3. TYPE I

POWER — 3A — A1 / B1 / A2 / N — OUTPUT — GROUND

B1 - 5V SOURCE
A1 - 28V SOURCE

TYPE III

POWER — 10A — A1 / A2 / A3 — OUTPUT — GROUND

LINE CONNECTIONS ARE CAPPED WHEN TANK IS REMOVED

NOTES: ALL FILL PORTS AND FILL VENTS ARE LOCATED BEHIND THE PREFLIGHT UMBILICAL ACCESS DOOR. SEE DWG 3.3-1 FOR ACCESS DOOR LOCATION

*3 H_2 CRYO 4

SIGNATURE		DATE	NATIONAL AERONAUTICS AND SPACE ADMINISTRATION LYNDON B. JOHNSON SPACE CENTER HOUSTON, TEXAS
DSGN LAURIE M. BUCHANAN		2/11/83	
DR			H_2 REACTANT STORAGE 5 TANK CONFIG OV-102 ONLY
ENGR S.R. HIRSHORN			
ENGR		11/5/91	
APP		11/5/91	
APP			SPACE SHUTTLE / DWG NO 3.3
OMNIPLAN S.K. Sanders		11-2-91	OV-102
LTR E	PCN 1		82.5 X 34 / PAGE / SHEET 4 OF 7

BASIC REV E-1

DATE: 10/18/90	NAME: MDU	VERSION: INK 1
DATE: 10/17/91	NAME: JMB	VERSION: BPT 5.15
DATE: 10/23/91	NAME: LAM	VERSION: INK 2

J I H G F E D C B A

8 7 6 5 4 3 2 1

V45 T2307A OF3 OM1 — H_2 TK 3 HTR ASSY TEMP -425 TO +475° F 1 S/S F

V_{PRFLT2} MMC4b CRY02&3 — I 8 — LF1 — GSE (QTY SELF TEST)

ESS 3AB CRYO QTY — H_2 TK3 — 3A — PNL ML86B+G CB56

V_{ESS3AB} ML86B

H_2 FILL 3 — FILL — 3.3-6 — FROM PALLET H_2 FILL MANIFOLD

HTR B — HTR A — 3

VAC ION PUMP — DC/DC — V45P2304A (GROUND ONLY)

SUPPLY — VENT

RELIEF VALVE/ FILTER PACKAGE — 5µ NOMINAL 13µ ABSOLUTE — Q/B RLF CRACK 302 PSIG RESEAT 280 PSIG

FROM PALLET H_2 SUPPLY MANIFOLD — 3.3-6 — TO H_2 COMMON MANIFOLD VIA HORIZONTAL DRAIN LINE — 3.3-1

FROM PALLET H_2 VENT MANIFOLD — 3.3-6 — H_2 VENT TK 3

V45 T2301A OF1 OM1 — H_2 TK 3 FLUID TEMP -425 TO +475° F 1 S/S C

V45 P2300A OF1 OF1 — H_2 TK 3 PRESSURE 0 TO 400 PSIA 1 S/S F — TO METER ON PANEL O2 — 3 4 5 6 — 3.3-1

V45 Q2305A OF3 OF3 — H_2 TK 3 QUANTITY 0 TO 105% 1 S/S C

ESS 3AB CRYO CNTLR — H_2 TK3 — 3A — PNL ML86B+G CB54 — V_{ESS3AB} ML86B

HEATER CONTROLLER (CPC) H_2 TK 3

(BFS) V45 P2310A OF1 N/A — H_2 TK 3 HTR CNTR PRESS 145 TO 305 PSIA 1 S/S C&W

HTR ON = 220±3 PSIA
HTR OFF = 240±3 PSIA

CH70 CH80 — 50 60 — TK1 TK2 — YELLOW H_2 PRESS — PNL F7A2 HI =294 PSIA LOW=153 PSIA

ESS 1BC CRYO CNTLR — H_2 TK4/5 — 3A — PNL ML86B+G CB50 — V_{ESS1BC} ML86B

HEATER CONTROLLER (CPC) H_2 TK 4/5

(BFS) V45 P2410A OF2 N/A — H_2 TK 4(&5) HTR CNTR PRESS 145 TO 305 PSIA 1 S/S C&W

V45 T2401A OF3 OM2 — H_2 TK 4 FLUID TEMP -425 TO +475° F 1 S/S C

V45 Q2405A OF3 OF3 — H_2 TK 4 QUANTITY 0 TO 105% 1 S/S C

V45 P2400A OF3 OF3 — H_2 TK 4 PRESSURE 0 TO 400 PSIA 1 S/S F

H_2 VENT TK 4 — RELIEF VALVE/ FILTER PACKAGE — Q/B RLF CRACK 302 PSIG RESEAT 290 PSIG — 5µ NOMINAL 13µ ABSOLUTE — TO H_2 RELIEF PORT 1 — 3.3-1

TO H_2 COMMON MANIFOLD — 3.3-1

H_2 TK 4 FILL — FILL — ESS 1BC CRYO QTY — H_2 TK4 — 3A — PNL ML86B+G CB52 — V_{ESS1BC} ML86B

V_{PRFLT1} MMC2b CRY01&4 — I 8 — LF1 — GSE (QTY SELF TEST)

HTR B — HTR A — 4

VAC ION PUMP — DC/DC — V45P2404A (GROUND ONLY)

V_{PRFLT1} MMC2b CRY01&4 — I 8 — LF1 — GSE

V45 T2407A OF2 OM2 — H_2 TK 4 HTR ASSY TEMP -425 TO +475° F 1 S/S F

V45 P2500A OF1 OF1 — H_2 TK 5 PRESSURE 0 TO 400 PSIA 1 S/S F

V45 T2501A OF2 OF2 — H_2 TK 5 FLUID TEMP -425 TO +475° F 1 S/S C

H_2 VENT TK 5 — RELIEF VALVE/ FILTER PACKAGE — Q/B RLF CRACK 302 PSIG RESEAT 290 PSIG — 5µ NOMINAL 13µ ABSOLUTE

H_2 RELIEF PORT 2 X_Q =990.0 Y_Q =105.0 Z_Q =352.22

V45 Q2505A OF3 OF3 — H_2 TK 5 QUANTITY 0 TO 105% 1 S/S C

H_2 TK 5 FILL — FILL — ESS 2CA CRYO QTY — H_2 TK5 — 3A — PNL ML86B+G CB84 — V_{ESS2CA} ML86B

HTR B — HTR A — 5

VAC ION PUMP — DC/DC — V45P2504A (GROUND ONLY)

V45 T2507A OF3 OF3 — H_2 TK 5 HTR ASSY TEMP -425 TO +475° F 1 S/S F

F14 5A F6 5A F2 5A F13 5A

4. REFER TO TABLE 3-1 FOR DRAWING REFERENCES
3. TYPE I

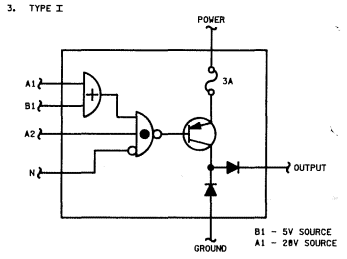

B1 - 5V SOURCE
A1 - 28V SOURCE

TYPE III

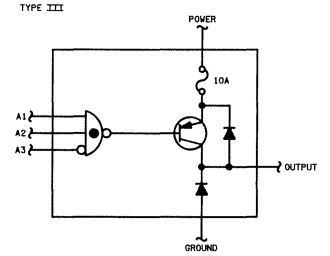

2 LINE CONNECTIONS ARE CAPPED WHEN TANK IS REMOVED

NOTES: 1 ALL FILL PORTS AND FILL VENTS ARE LOCATED BEHIND THE PREFLIGHT UMBILICAL ACCESS DOOR. SEE DWG 3.3-1 FOR ACCESS DOOR LOCATION

*3 H_2 CRYO 4

SIGNATURE		DATE	NATIONAL AERONAUTICS AND SPACE ADMINISTRATION LYNDON B. JOHNSON SPACE CENTER HOUSTON, TEXAS
DSGN LAURIE M. BUCHANAN		2/11/83	
DR			H_2 REACTANT STORAGE 5 TANK CONFIG OV-102 ONLY
ENGR S.R. HIRSHORN			
ENGR		11/5/91	
APPR		11/5/91	
APP			SPACE SHUTTLE / DWG NO 3.3
OMNIPLAN S.K. Linkey		11-2-91	OV-102
LTR E	PCN 1		82.5 X 34 / PAGE / SHEET 4 OF 7

BASIC REV E-1

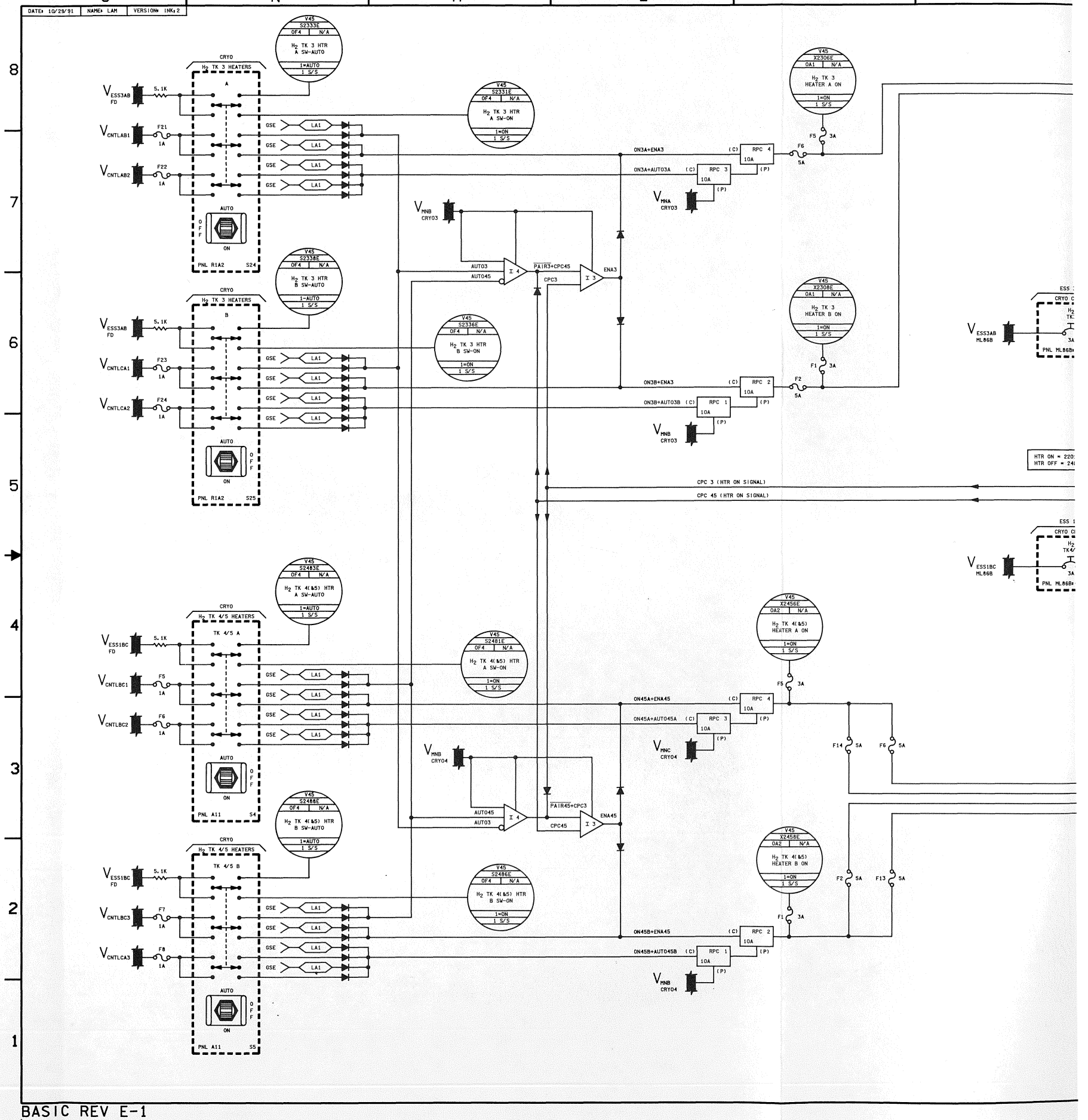
DATE: 10/29/91
NAME: LAM
VERSION: INK 2
CRYO
H2 TK 3 HEATERS
A
B
TK 4/5 A
TK 4/5 B
H2 TK 4(&5) HEATERS
V45 S2333E OF4 N/A H2 TK 3 HTR A SW-AUTO 1=AUTO 1 S/S
V45 S2331E OF4 N/A H2 TK 3 HTR A SW-ON 1=ON 1 S/S
V45 S2338E OF4 N/A H2 TK 3 HTR B SW-AUTO 1=AUTO 1 S/S
V45 S2336E OF4 N/A H2 TK 3 HTR B SW-ON 1=ON 1 S/S
V45 S2483E OF4 N/A H2 TK 4(&5) HTR A SW-AUTO 1=AUTO 1 S/S
V45 S2481E OF4 N/A H2 TK 4(&5) HTR A SW-ON 1=ON 1 S/S
V45 S2486E OF4 N/A H2 TK 4(&5) HTR B SW-AUTO 1=AUTO 1 S/S
V45 S2486E OF4 N/A H2 TK 4(&5) HTR B SW-ON 1=ON 1 S/S
V45 X2306E OA1 N/A H2 TK 3 HEATER A ON 1=ON 1 S/S
V45 X2308E OA1 N/A H2 TK 3 HEATER B ON 1=ON 1 S/S
V45 X2456E OA2 N/A H2 TK 4(&5) HEATER A ON 1=ON 1 S/S
V45 X2458E OA2 N/A H2 TK 4(&5) HEATER B ON 1=ON 1 S/S
VESS3AB FD
VESS1BC FD
VESS3AB ML86B
VESS1BC ML86B
5.1K
VCNTLAB1
VCNTLAB2
VCNTLCA1
VCNTLCA2
VCNTLBC1
VCNTLBC2
VCNTLBC3
VCNTLCA3
F21 1A
F22 1A
F23 1A
F24 1A
F5 1A
F6 1A
F7 1A
F8 1A
GSE
LA1
AUTO
OFF
ON
PNL R1A2 S24
PNL R1A2 S25
PNL A11 S4
PNL A11 S5
VMNB CRY03
VMNA CRY03
VMNB CRY04
VMNC CRY04
AUTO03
AUTO045
I 4
I 3
PAIR3+CPC45
CPC3
ENA3
PAIR45+CPC3
CPC45
ENA45
ON3A+ENA3
ON3A+AUTO3A
ON3B+ENA3
ON3B+AUTO3B
ON45A+ENA45
ON45A+AUTO45A
ON45B+ENA45
ON45B+AUTO45B
RPC 4
RPC 3
RPC 2
RPC 1
10A
(C)
(P)
F5 3A
F6 5A
F1 3A
F2 5A
F14 5A
F13 5A
CPC 3 (HTR ON SIGNAL)
CPC 45 (HTR ON SIGNAL)
HTR ON = 22D
HTR OFF = 24
ESS 1
CRYO C
H2
TK4/
3A
PNL ML86B
0 N M L K J
8 7 6 5 4 3 2 1

BASIC REV E-1

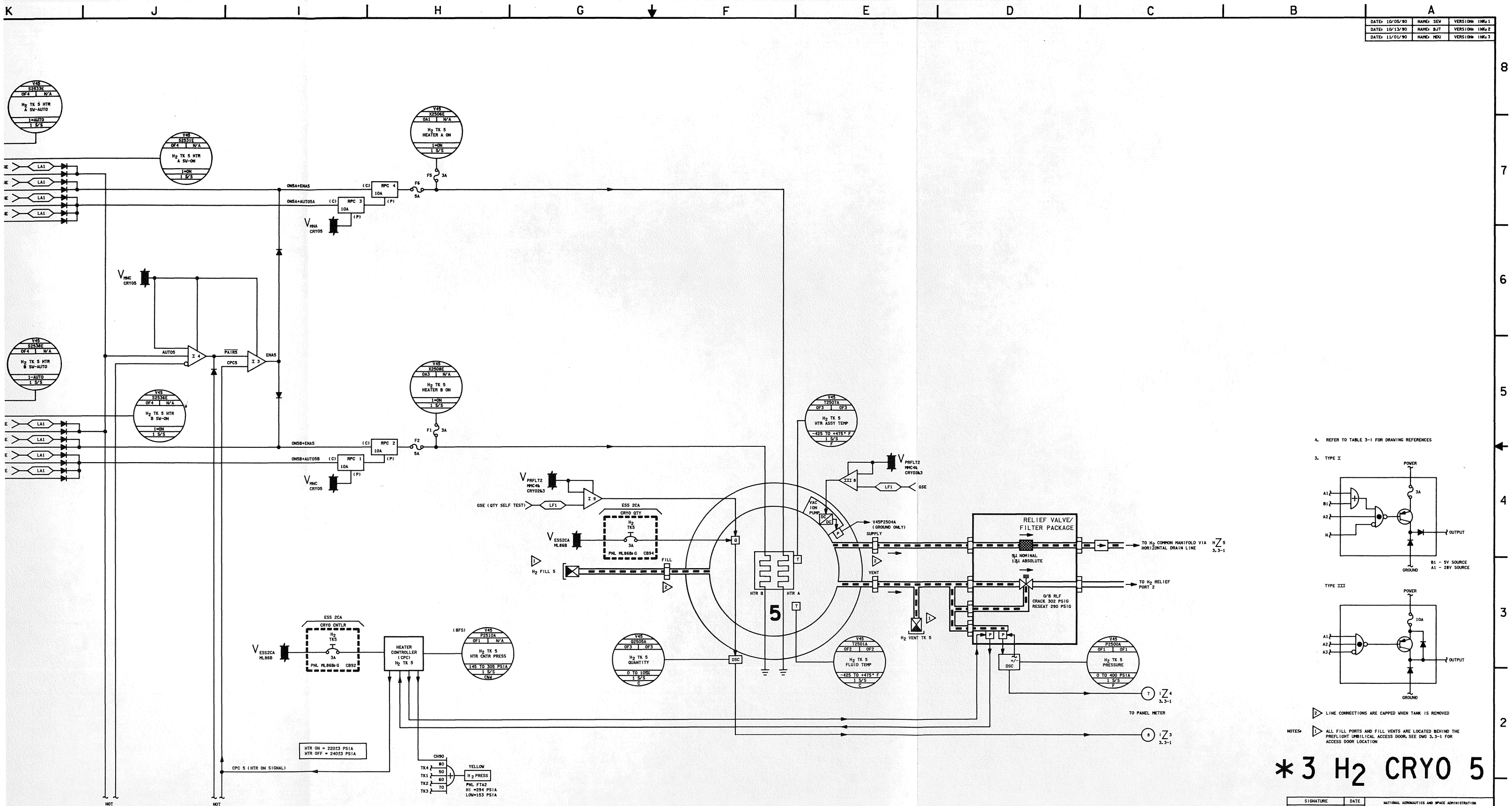

K J I H G F E D C B A
8 7 6 5 4 3 2 1
V45 S2533E OF4 N/A H2 TK 5 HTR A SW-AUTO 1=AUTO 1 S/S
V45 S2531E OF4 N/A H2 TK 5 HTR A SW-ON 1=ON 1 S/S
V45 X2506E OA1 N/A H2 TK 5 HEATER A ON 1=ON 1 S/S
V45 S2538E OF4 N/A H2 TK 5 HTR B SW-AUTO 1=AUTO 1 S/S
V45 S2536E OF4 N/A H2 TK 5 HTR B SW-ON 1=ON 1 S/S
V45 X2508E OA3 N/A H2 TK 5 HEATER B ON 1=ON 1 S/S
V45 T2507A OF3 OF3 H2 TK 5 HTR ASSY TEMP -425 TO +475° F 1 S/S F
V45 P2510A OF1 N/A H2 TK 5 HTR CNTR PRESS 145 TO 305 PSIA 1 S/S C&W
V45 Q2505A OF3 OF3 H2 TK 5 QUANTITY 0 TO 105% 1 S/S C
V45 T2501A OF2 OF2 H2 TK 5 FLUID TEMP -425 TO +475° F 1 S/S C
V45 P2500A OF1 OF1 H2 TK 5 PRESSURE 0 TO 400 PSIA 1 S/S F
ON5A+ENA5
ON5A+AUTO5A
ON5B+ENA5
ON5B+AUTO5B
RPC 4 10A
RPC 3 10A
RPC 2 10A
RPC 1 10A
F5 3A
F6 5A
F1 3A
F2 5A
VMNA CRYO5
VMNC CRYO5
VMNC CRYO5
AUTO5
PAIR5
CPC5
ENA5
VPRFLT2 MMC4& CRYO2&3
GSE (QTY SELF TEST)
LF1
ESS 2CA CRYO QTY H2 TK5 3A PNL ML86B&G CB94
VESS2CA ML86B
H2 FILL 5
FILL
HTR B
HTR A
5
VAC ION PUMP
V45P2504A (GROUND ONLY)
SUPPLY
VENT
RELIEF VALVE/ FILTER PACKAGE
5µ NOMINAL 1µ ABSOLUTE
O/B RLF CRACK 302 PSIG RESEAT 290 PSIG
TO H2 COMMON MANIFOLD VIA HORIZONTAL DRAIN LINE
TO H2 RELIEF PORT 2
H2 VENT TK 5
DSC
TO PANEL METER
ESS 2CA CRYO CNTLR H2 TK5 3A PNL ML86B&G CB92
HEATER CONTROLLER (CPC) H2 TK 5
(BFS)
HTR ON = 220±3 PSIA
HTR OFF = 240±3 PSIA
CPC 5 (HTR ON SIGNAL)
CH90
YELLOW
H2 PRESS
PNL F7A2
HI =294 PSIA
LOW=153 PSIA
NOT CONNECTED
NOT CONNECTED
4. REFER TO TABLE 3-1 FOR DRAWING REFERENCES
3. TYPE I
POWER
OUTPUT
GROUND
B1 - 5V SOURCE
A1 - 28V SOURCE
TYPE III
2 LINE CONNECTIONS ARE CAPPED WHEN TANK IS REMOVED
NOTES: 1 ALL FILL PORTS AND FILL VENTS ARE LOCATED BEHIND THE PREFLIGHT UMBILICAL ACCESS DOOR. SEE DWG 3.3-1 FOR ACCESS DOOR LOCATION
*3 H2 CRYO 5
SIGNATURE DATE
DSGN LAURIE M. BUCHANAN 2/11/83
DR
ENGR S.R. HIRSHORN
ENGR 10/16/90
APP 10/16/90
APP
OMNIPLAN S.K. Kimbrell 11-1-90
LTR E PCN
NATIONAL AERONAUTICS AND SPACE ADMINISTRATION LYNDON B. JOHNSON SPACE CENTER HOUSTON, TEXAS
H2 REACTANT STORAGE 5 TANK CONFIGURATION OV-105
SPACE SHUTTLE OV 105
DWG NO 3.3
66 X 34
PAGE SHEET 5 OF 7
BASIC REV E

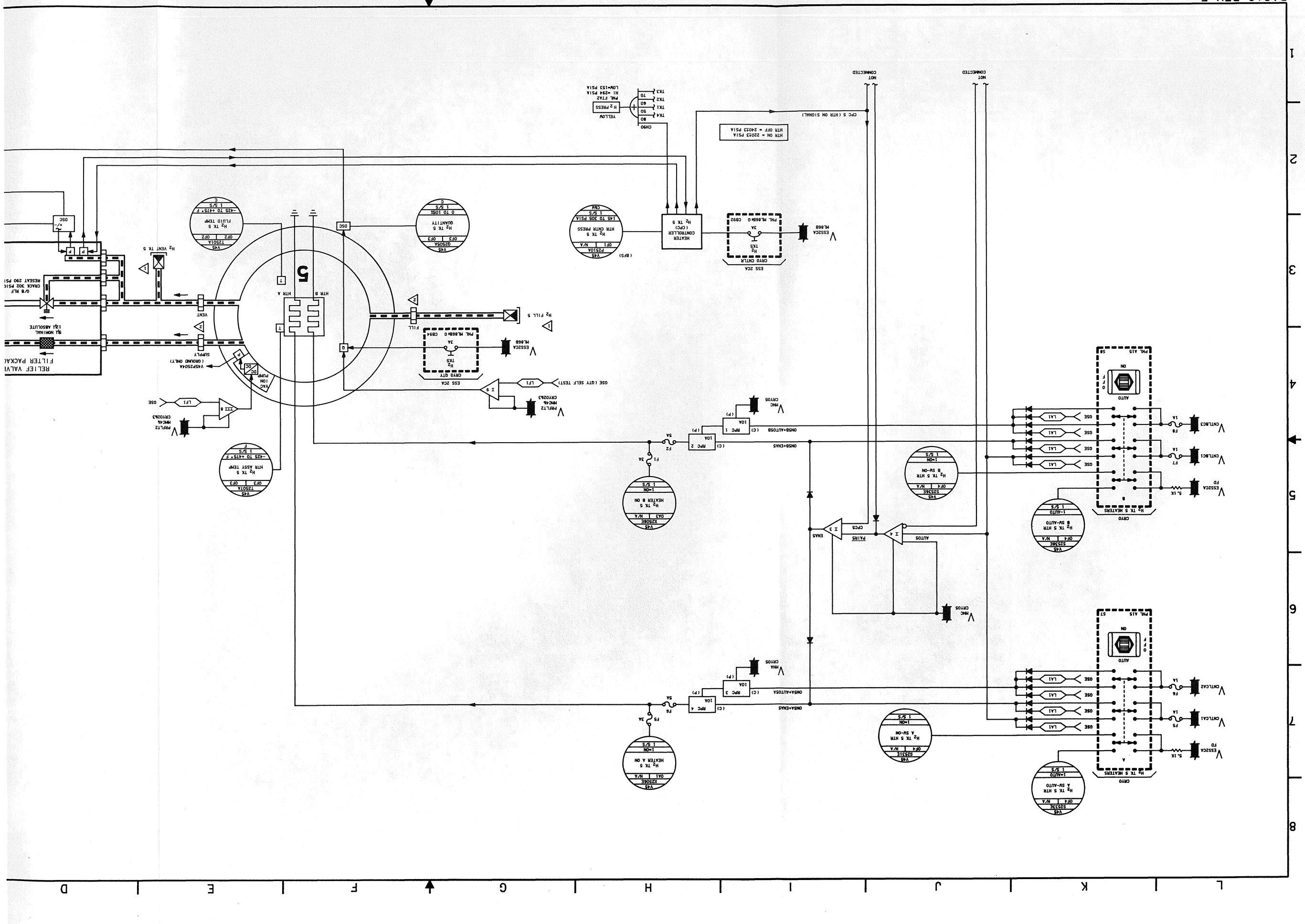
5
HTR A
HTR B
VENT
SUPPLY
FILL
RELIEF VALVE
FILTER PACKAGE
CHECK 302 PSIG
RESEAT 290 PSIG
O/B RLF
GSE (QTY SELF TEST)
CONNECTED
NOT CONNECTED
CPC 5 (HTR ON SIGNAL)
HTR ON = 2203 PSIA
HTR OFF = 2403 PSIA
LOW=153 PSIA
HI =294 PSIA
H2 HEATERS
AUTO
ON
OFF
CNTLBC1
CNTLBC2
CNTLCA1
CNTLCA2
ESSZCA
ESS 2CA
CRYO CNTLR
CRYO QTY
CRYO HEATERS
H2 TK 5 HTR A SW-AUTO
H2 TK 5 HTR B SW-AUTO
H2 TK 5 HTR A SW-ON
H2 TK 5 HTR B SW-ON
H2 TK 5 HEATER A ON
H2 TK 5 HEATER B ON
H2 TK 5 HTR ASSY TEMP
H2 TK 5 FLUID TEMP
H2 TK 5 QUANTITY
H2 TK 5 HTR CNTR PRESS
H2 PRESS
H2 VENT TK 5
H2 FILL 5
HEATER CONTROLLER (CPC) H2 TK 5
ONSA+AUTOSA
ONSA+EHAS
ONSB+AUTOSB
ONSB+EHAS
AUTOS
EHAS
PAIRS
CRYOS
PNL A15
PNL A15J
PNL ML86BH C892
PNL ML86BH C894
ML86BA
ML86BB
ML86CA
ML86CB
GSE
LAI
RPC 1
RPC 2
RPC 3
RPC 4
10A
5A
3A
1.5K
1 SEC
1 MIN
1 HR
1 DAY
1 WK
1 MO
1 YR
1-AUTO
1-ON
1 S/S
2 S/S
N/A
V49 525346E OA3
V49 525346E OA4
V49 525316E OA4
V49 525316E OA1
V45 12501A OP2
V45 12501A OP3
V45 12501A OP4
V45 12501A OP5
V45 P2510A OP1
V45 Q2505A OP3
V45 P2510A C&V
V45 Q2505A C&V
V45 12501A C&V
V45 12501A E
V45 12501A F
V45 12501A P
V45 12501A Q
V45 12501A R
V45 12501A T
V45 12501A U
V45 12501A V
V45 12501A W
V45 12501A X
V45 12501A Y
V45 12501A Z
V45 12501A 1
V45 12501A 2
V45 12501A 3
V45 12501A 4
V45 12501A 5
V45 12501A 6
V45 12501A 7
V45 12501A 8
V45 12501A 9
V45 12501A 10
V45 12501A 11
V45 12501A 12
V45 12501A 13
V45 12501A

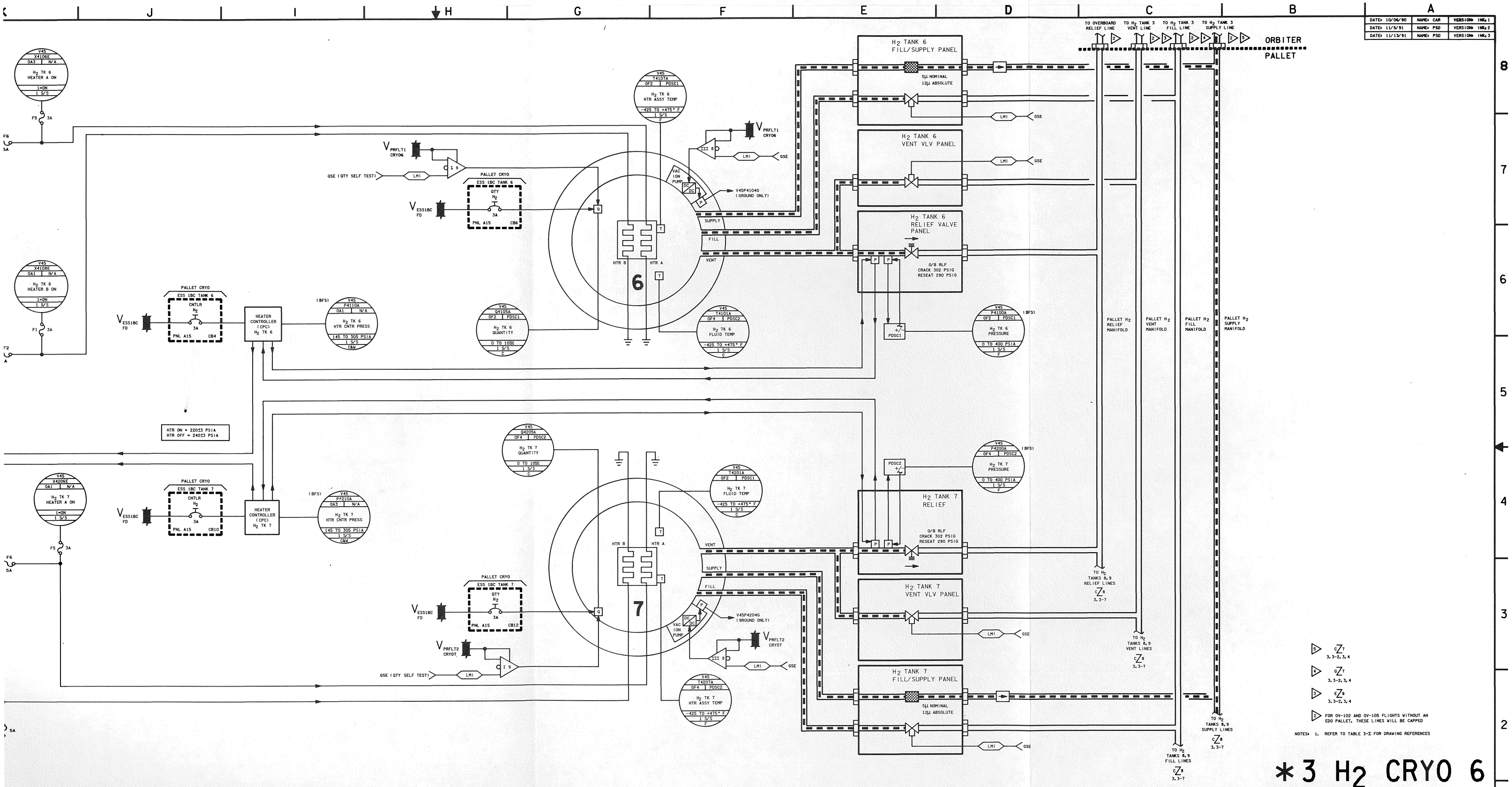

DATE: 10/06/90	NAME: CAR	VERSION: INK 1
DATE: 11/5/91	NAME: PSD	VERSION: INK 2
DATE: 11/13/91	NAME: PSD	VERSION: INK 3

5 C7 3.3-2,3,4

4 G7 3.3-2,3,4

3 E6 3.3-2,3,4

2 FOR OV-102 AND OV-105 FLIGHTS WITHOUT AN EDO PALLET, THESE LINES WILL BE CAPPED

NOTES: 1. REFER TO TABLE 3-I FOR DRAWING REFERENCES

*3 H_2 CRYO 6

SIGNATURE	DATE	NATIONAL AERONAUTICS AND SPACE ADMINISTRATION LYNDON B. JOHNSON SPACE CENTER HOUSTON, TEXAS
DSGN VICKI S. HUNTER	8/16/90	
DR		PALLET H_2 REACTANT TANKS 6 & 7
ENGR L.V. MINTER		
ENGR Larry Minter	11/8/91	
APPR Paul Joyce	11/8/91	
APP		SPACE SHUTTLE — DWG NO 3.3
OMNIPLAN S.K. Kindrew	11.12.91	EDO: OV102 AND OV105
LTR E — PCN 1		82.5 X 34 — PAGE — SHEET 6 OF 7

BASIC REV E-1

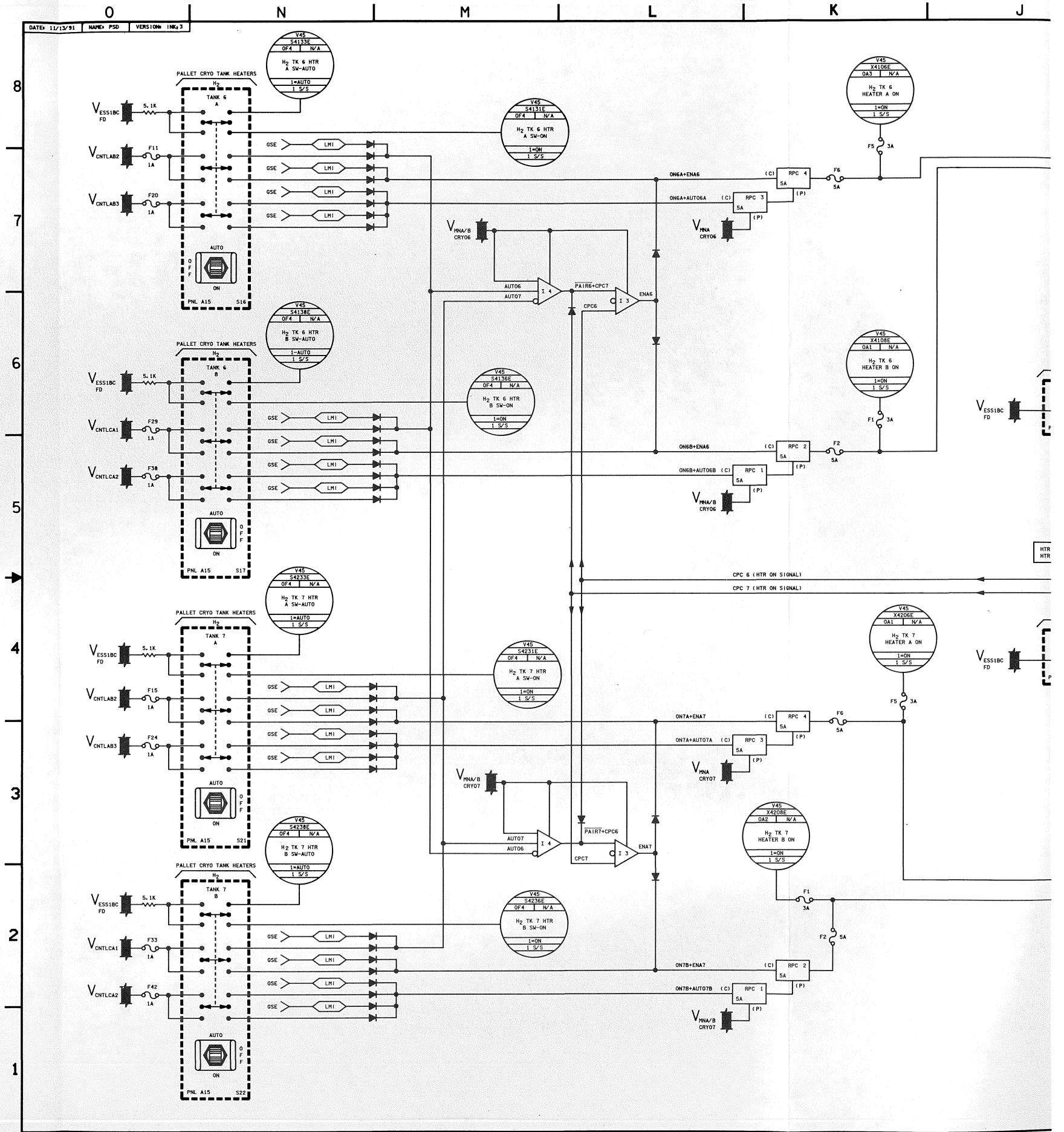
DATE: 11/13/91
NAME: PSD
VERSION: INK 3
PALLET CRYO TANK HEATERS
TANK 6 A
TANK 6 B
TANK 7 A
TANK 7 B
AUTO
OFF
ON
PNL A15 S16
PNL A15 S17
PNL A15 S21
PNL A15 S22
V45 S41336E H2 TK 6 HTR A SW-AUTO
V45 S41316E H2 TK 6 HTR A SW-ON
V45 S41386E H2 TK 6 HTR B SW-AUTO
V45 S41366E H2 TK 6 HTR B SW-ON
V45 S42336E H2 TK 7 HTR A SW-AUTO
V45 S42316E H2 TK 7 HTR A SW-ON
V45 S42386E H2 TK 7 HTR B SW-AUTO
V45 S42366E H2 TK 7 HTR B SW-ON
V45 X4106E H2 TK 6 HEATER A ON
V45 X4108E H2 TK 6 HEATER B ON
V45 X4206E H2 TK 7 HEATER A ON
V45 X4208E H2 TK 7 HEATER B ON
1=AUTO 1 S/S
1=ON 1 S/S
VESS1BC FD
VCNTLAB2
VCNTLAB3
VCNTLCA1
VCNTLCA2
VMNA/B CRY06
VMNA CRY06
VMNA/B CRY07
VMNA CRY07
5.1K
F11 1A
F20 1A
F29 1A
F38 1A
F15 1A
F24 1A
F33 1A
F42 1A
GSE
LMI
ON6A+ENA6
ON6A+AUTO6A
ON6B+ENA6
ON6B+AUTO6B
ON7A+ENA7
ON7A+AUTO7A
ON7B+ENA7
ON7B+AUTO7B
RPC 4 5A
RPC 3 5A
RPC 2 5A
RPC 1 5A
F5 3A
F6 5A
F1 3A
F2 5A
AUTO6
AUTO7
PAIR6+CPC7
PAIR7+CPC6
CPC6
CPC7
ENA6
ENA7
I 4
I 3
CPC 6 (HTR ON SIGNAL)
CPC 7 (HTR ON SIGNAL)
HTR
HTR

BASIC REV E-1

DATE: 10/06/90	NAME: CAR	VERSION: INK 1
DATE: 10/12/90	NAME: LAM	VERSION: INK 2
DATE: 11/5/91	NAME: PSD	VERSION: INK 3

V45 X4306E 0A3 N/A — H_2 TK 8 HEATER A ON — 1=ON 1 S/S — F5 3A

V45 X4308E 0A2 N/A — H_2 TK 8 HEATER B ON — 1=ON 1 S/S — F1 3A

V45 X4408E 0A2 N/A — H_2 TK 9 HEATER A ON — 1=ON 1 S/S — F5 3A — F6 5A

V45 X4408E 0A2 N/A — H_2 TK 9 HEATER B ON — 1=ON 1 S/S — F1 3A

V_{ESS2CA} FD

PALLET CRYO — ESS 2CA TANK 8 — CNTLR H_2 — 3A — PNL A15 CB16

PALLET CRYO — ESS 2CA TANK 9 — CNTLR H_2 — 3A — PNL A15 CB22

HEATER CONTROLLER (CPC) H_2 TK 8

HEATER CONTROLLER (CPC) H_2 TK 9

HTR ON = 22023 PSIA
HTR OFF = 24023 PSIA

(BFS) V45 P4310A 0A1 N/A — H_2 TK 8 HTR CNTR PRESS — 145 TO 305 PSIA — 1 S/S C&W

(BFS) V45 P4410A 0A3 N/A — H_2 TK 9 HTR CNTR PRESS — 145 TO 305 PSIA — 1 S/S C&W

V45 Q4305A 0F2 PDSC1 — H_2 TK 8 QUANTITY — 0 TO 105% — 1 S/S C

V45 Q4405A 0F4 PDSC2 — H_2 TK 9 QUANTITY — 0 TO 105% — 1 S/S C

V45 T4307A 0F2 PDSC1 — H_2 TK 8 HTR ASSY TEMP — -425 TO +475° F — 1 S/S P

V45 T4407A 0F4 PDSC2 — H_2 TK 9 HTR ASSY TEMP — -425 TO +475° F — 1 S/S P

V45 T4301A 0F4 PDSC2 — H_2 TK 8 FLUID TEMP — -425 TO +475° F — 1 S/S C

V45 T4401A 0F2 PDSC1 — H_2 TK 9 FLUID TEMP — -425 TO +475° F — 1 S/S C

(BFS) V45 P4300A 0F2 PDSC1 — H_2 TK 8 PRESSURE — 0 TO 400 PSIA — 1 S/S P

(BFS) V45 P4400A 0F4 PDSC2 — H_2 TK 9 PRESSURE — 0 TO 400 PSIA — 1 S/S P

PDSC1 +/- P

PDSC2 +/- P

V_{PRFLT1} CRY08 — LMI — GSE (QTY SELF TEST) — I 9

V_{PRFLT2} CRY09 — LMI — GSE (QTY SELF TEST) — I 9

V_{ESS2CA} FD — PALLET CRYO — ESS 2CA TANK 8 — QTY H_2 — 3A — PNL A15 CB18

V_{ESS2CA} FD — PALLET CRYO — ESS 2CA TANK 9 — QTY H_2 — 3A — PNL A15 CB24

V_{PRFLT1} CRY08 — III 8 — LMI — GSE

V_{PRFLT2} CRY09 — III 8 — LFI — GSE

VAC ION PUMP — DC DC — V45P4304G (GROUND ONLY)

VAC ION PUMP — DC DC — V45P4404G (GROUND ONLY)

8 — HTR B — HTR A — SUPPLY — FILL — VENT

9 — HTR B — HTR A — VENT — FILL — SUPPLY

H_2 TANK 8 FILL/SUPPLY PANEL — 5μ NOMINAL 12μ ABSOLUTE — LMI — GSE

H_2 TANK 8 VENT VLV PANEL — LMI — GSE

H_2 TANK 8 RELIEF VALVE PANEL — Q/B RLF CRACK 302 PSIG RESEAT 290 PSIG

H_2 TANK 9 RELIEF — Q/B RLF CRACK 302 PSIG RESEAT 290 PSIG

H_2 TANK 9 VENT VLV PANEL — LMI — GSE

H_2 TANK 9 FILL/SUPPLY PANEL — 5μ NOMINAL 12μ ABSOLUTE — LMI — GSE

Z3 3.3-6 — TO H_2 TANKS 6,7 RELIEF LINES

Z3 3.3-6 — TO H_2 TANKS 6,7 VENT LINES

Z2 3.3-6 — TO H_2 TANKS 6,7 FILL LINES

Z2 3.3-6 — TO H_2 TANKS 6,7 SUPPLY LINES

PALLET H_2 RELIEF MANIFOLD

PALLET H_2 VENT MANIFOLD

PALLET H_2 FILL MANIFOLD

PALLET H_2 SUPPLY MANIFOLD

NOTES: 1. REFER TO TABLE 3-I FOR DRAWING REFERENCES

*3 H_2 CRYO 7

SIGNATURE	DATE	NATIONAL AERONAUTICS AND SPACE ADMINISTRATION LYNDON B. JOHNSON SPACE CENTER HOUSTON, TEXAS
DSGN VICKI S. HUNTER	8/15/90	
DR		
ENGR R. AL-AYOUBI		PALLET H_2 REACTANT TANKS 8 & 9
ENGR	11/8/91	
APP	11/8/91	
APP	11/8/91	SPACE SHUTTLE — DWG NO 3.3
OMNIPLAN	11-12-91	EO04 OV102 AND OV105
LTR E — PCN 1		82.5 X 34 — PAGE — SHEET 7 OF 7

BASIC REV E-1

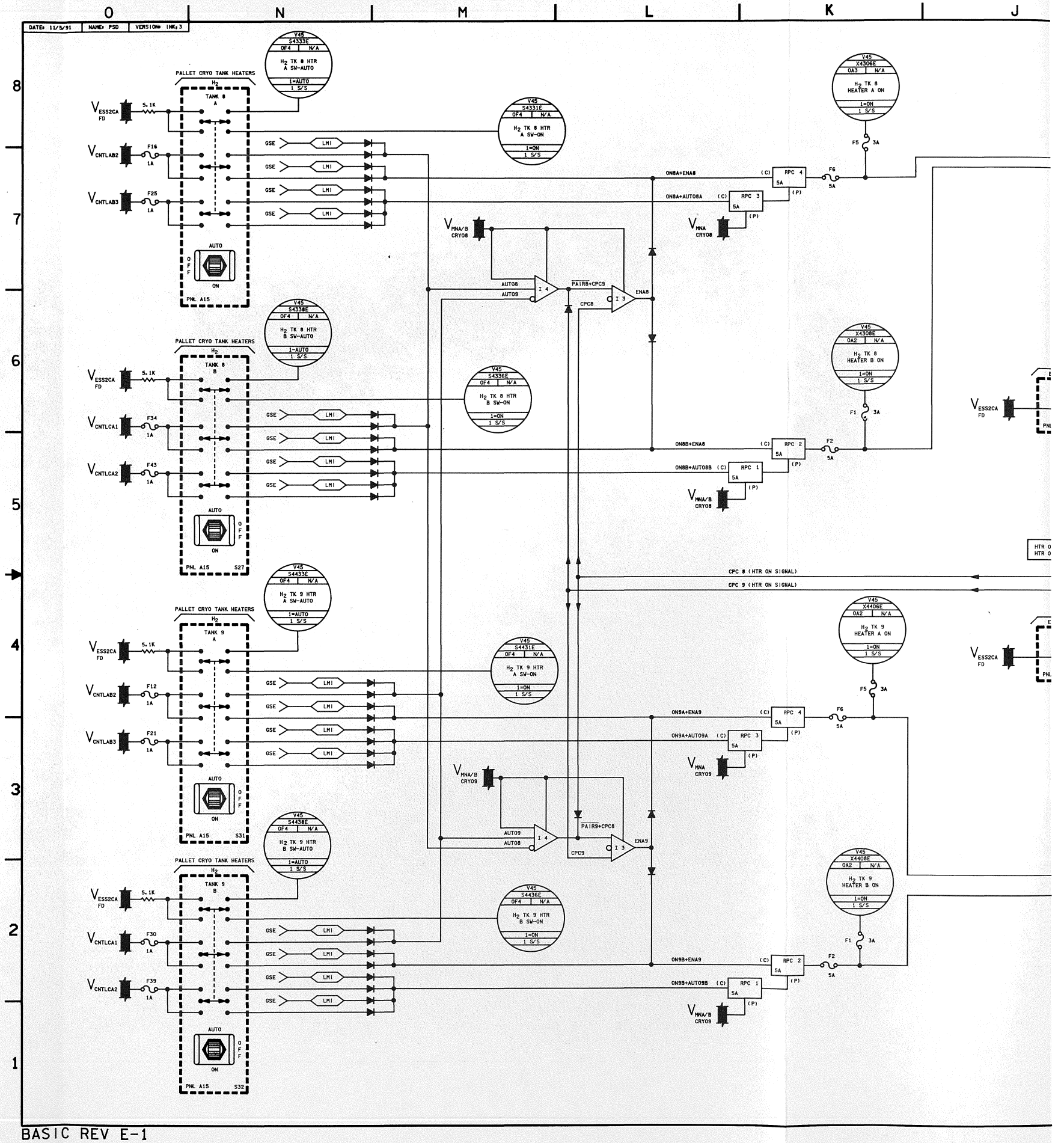
DATE: 11/5/91
NAME: PSD
VERSION: INK: 3
PALLET CRYO TANK HEATERS
TANK 8 A
TANK 8 B
TANK 9 A
TANK 9 B
H2 TK 8 HTR A SW-AUTO
H2 TK 8 HTR A SW-ON
H2 TK 8 HTR B SW-AUTO
H2 TK 8 HTR B SW-ON
H2 TK 9 HTR A SW-AUTO
H2 TK 9 HTR A SW-ON
H2 TK 9 HTR B SW-AUTO
H2 TK 9 HTR B SW-ON
H2 TK 8 HEATER A ON
H2 TK 8 HEATER B ON
H2 TK 9 HEATER A ON
H2 TK 9 HEATER B ON
CPC 8 (HTR ON SIGNAL)
CPC 9 (HTR ON SIGNAL)
PAIR8+CPC9
PAIR9+CPC8
PNL A15
S27
S31
S32

BASIC REV E-1

DATE: 12/17/92	NAME: LAM	VERSION# INR: 12
DATE: 02/26/96	NAME: SVJ	VERSION# BPT: 6
DATE: 04/16/96	NAME: SVJ	VERSION# INR: 13

*4 FUEL CELL 1

SIGNATURE	DATE	NATIONAL AERONAUTICS AND SPACE ADMINISTRATION LYNDON B. JOHNSON SPACE CENTER HOUSTON, TEXAS
DSGN K. CHARLSON	05-25-79	
DR		FUEL CELL
ENGR L. MINTER		
ENGR	5/13/96	
APP	5/13/96	
APP		SPACE SHUTTLE
CADS	6-17-96	ALL
LTR E -	PCN 6	126.5 X 34

DWG NO 3.4

PAGE SHEET 1 OF 2

BASIC REV E-6

FUEL CELL

INTEGRATED DUAL GAS REGULATOR MODULE

DUAL FLOW CONTROL/O_2 PURGE VALVE

PORT	PURGE FLOW	NORMAL FLOW
A	OPEN	CLOSED
B	CLOSED	OPEN
C	OPEN	OPEN

ORBITER GSE

COOLANT LOOP DRAIN

FUEL CELL COOLANT LOOP ONE

FUEL CELL COOLANT LOOP TWO

FREON COOLANT LOOP ONE

FREON COOLANT LOOP TWO

COOLANT FILL FILLER TOOL

ATCS/FC HX

FREON OUT

FREON IN

MAX 140°F

ORBITER GSE

COOLANT LOOP DRAIN

FUEL CELL COOLANT RETURN TEMP

0 TO 250°F

1 S/S

V45 1014A OF2 OH2

(T0145A) OF/OH2

(T0145A) OF/OH1

DUAL 110°F AT 54KW

COLD PREMIXING VALVE NO HOT FLOW 101° F MAX (100 PCT) HOT FLOW 90° F

CONDENSER EXIT TEMP CONTROL VALVE NO BYPASS FLOW 160° F MAX (100 PCT) BYPASS FLOW 145° F

HOT PREMIXING VALVE NO HOT FLOW 152° F MAX (100 PCT) HOT FLOW 140° F

325 BYPASS

STACK INLET TEMP CONTROL VALVE NO BYPASS FLOW 190° F MAX (70 PCT) BYPASS FLOW 170° F

SUSTAINING HEATER 670 WATTS OFF AT 212°F ABOVE ON TEMP

STARTUP HEATER 1771 WATTS ON AT FC STARTUP OFF AT STACK OUT TEMP 186°F OR STACK IN TEMP 212°F

O_2 PREHEATER

H_2 PREHEATER

O_2 HEATER

H_2 HEATER

O_2 PURGE VALVE

H_2 PURGE VALVE

O_2 FLOW CONTROL VALVE

H_2 FLOW CONTROL VALVE

O_2 REGULATOR

H_2 REGULATOR

O_2 SURGE TANK

H_2 SURGE TANK

O_2 MANIFOLD

H_2 MANIFOLD

O_2 VENT

H_2 VENT

O_2 RELIEF VALVE

H_2 RELIEF VALVE

O_2 FILL VALVE

H_2 FILL VALVE

O_2 QUANTITY

H_2 QUANTITY

O_2 PRESS

H_2 PRESS

O_2 FLOW

H_2 FLOW

O_2 HEATER TEMP

H_2 HEATER TEMP

O_2 MANIFOLD TEMP

H_2 MANIFOLD TEMP

O_2 VENT TEMP

H_2 VENT TEMP

O_2 PURGE VLV OPEN

H_2 PURGE VLV OPEN

O_2 PURGE VLV CLOSED

H_2 PURGE VLV CLOSED

O_2 VENT VLV OPEN

H_2 VENT VLV OPEN

O_2 VENT VLV CLOSED

H_2 VENT VLV CLOSED

O_2 FILL VLV OPEN

H_2 FILL VLV OPEN

O_2 FILL VLV CLOSED

H_2 FILL VLV CLOSED

O_2 HEATER PWR

H_2 HEATER PWR

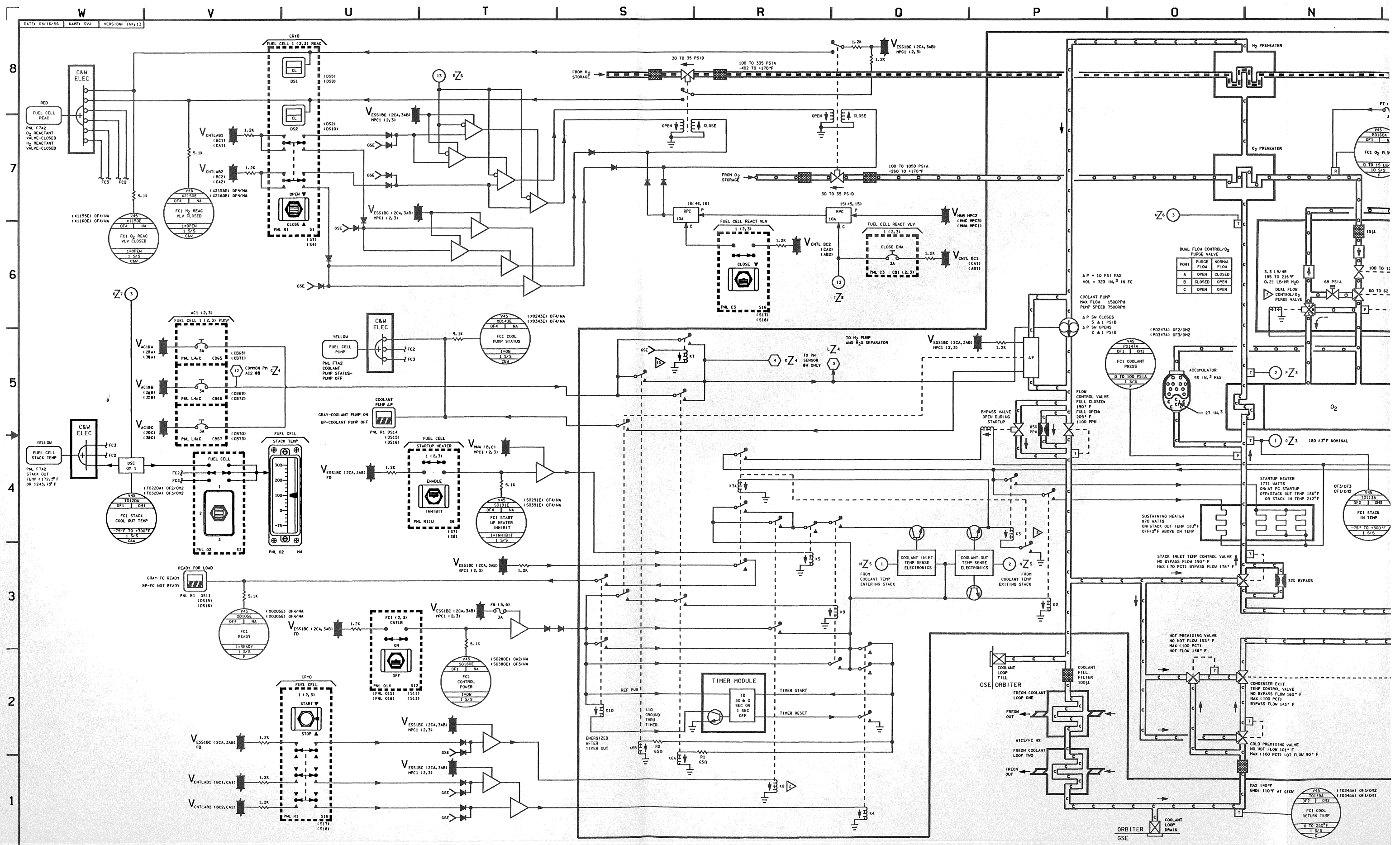
DATE: 04/16/96 | NAME: SVJ | VERSION INK: 13
W V U T S R O P O N
8 7 6 5 4 3 2 1
CRYO FUEL CELL 1 (2,3) REAC
DS1 (DS5) (DS9)
DS2 (DS2) (DS10)
C&W ELEC
RED
FUEL CELL REAC
PNL F7A2
O2 REACTANT VALVE-CLOSED
H2 REACTANT VALVE-CLOSED
FC3 FC2
5.1K
V45 X2150E OF4 NA
FC1 H2 REAC VLV CLOSED
1=OPEN 1 S/S C&W
(X1155E) OF4/NA (X1160E) OF4/NA
V45 X1150E OF4 NA
FC1 O2 REAC VLV CLOSED
1=OPEN 1 S/S C&W
(X2155E) OF4/NA (X2160E) OF4/NA
VCNTLAB1 (BC1) (CA1)
VCNTLAB2 (BC2) (CA2)
1.2K
GSE
OPEN CLOSE
PNL R1 S1
(S7) (S4)
VESS1BC (2CA, 3AB) MPC1 (2, 3)
13 Z6
FROM H2 STORAGE
30 TO 35 PSID
100 TO 335 PSIA -402 TO +170°F
OPEN CLOSE
FROM O2 STORAGE
100 TO 1050 PSIA -260 TO +170°F
30 TO 35 PSID
16(46,16) RPC 10A
15(45,15) RPC 10A
FUEL CELL REACT VLV 1 (2,3)
CLOSE
PNL C3 S16 (S17) (S18)
VCNTL BC2 (CA2) (AB2)
VCNTL BC1 (CA1) (AB1)
CLOSE ENA 3A
PNL C3 CB1 (2,3)
VHNB MPC2 (MNC MPC3) (MNA MPC1)
Z7 3
AC1 (2,3) FUEL CELL 1 (2,3) PUMP
VAC1OA (2OA) (3OA)
VAC1OB (2OB) (3OB)
VAC1OC (2OC) (3OC)
3A
PNL L4,C
(CB68) (CB71)
(CB65) (CB66) (CB67)
(CB69) (CB72) (CB70) (CB73)
12 COMMON Pt AC2 OB
Z4
YELLOW
FUEL CELL PUMP
PNL F7A2 COOLANT PUMP STATUS-PUMP OFF
C&W ELEC
FC2 FC3
5.1K
V45 XO143E OF4 NA
FC1 COOL PUMP STATUS
1=ON 1 S/S C&W
(XO243E) OF4/NA (XO343E) OF4/NA
GSE
K7
4 Z4 TO PH SENSOR 0A ONLY
L Z4 3
TO H2 PUMP AND H2O SEPARATOR
VESS1BC (2CA, 3AB) MPC1 (2, 3)
1.2K
ΔP
H2 PREHEATER
O2 PREHEATER
FT (
3
V45 RO16OA OF1 N
FC1 O2 FLO
0 TO 15 LB/ 10 S/S F
R
P
T
Z6 3
15μ
100 TO 12
60 TO 62
3.3 LB/HR 185 TO 215°F 0.21 LB/HR H2O
69 PSIA
DUAL FLOW CONTROL/O2 PURGE VALVE
PORT | PURGE FLOW | NORMAL FLOW
A | OPEN | CLOSED
B | CLOSED | OPEN
C | OPEN | OPEN
ΔP = 10 PSI MAX VOL = 323 IN.3 IN FC
COOLANT PUMP MAX FLOW 1500PPH PUMP SPEED 7500RPM
ΔP SW CLOSES 5 ± 1 PSID
ΔP SW OPENS 2 ± 1 PSID
(P0247A) OF2/OM2 (P0347A) OF3/OM2
V45 P0147A OF1 OM1
FC1 COOLANT PRESS
0 TO 100 PSIA 1 S/S F
ACCUMULATOR 96 IN.3 MAX
27 IN.3
O2
2 Z3
1 Z3 180 ±3°F NOMINAL
BYPASS VALVE OPEN DURING STARTUP
850 PPH
FLOW CONTROL VALVE FULL CLOSED= 190° F FULL OPEN= 209° F 1100 PPH
STARTUP HEATER 1771 WATTS ON AT FC STARTUP OFF= STACK OUT TEMP 186°F OR STACK IN TEMP 212°F
OF3/OF3 OF1/OM2
V45 T0113A OF2 OM3
FC1 STACK IN TEMP -75° TO +300°F 1 S/S
SUSTAINING HEATER 870 WATTS ON= STACK OUT TEMP 183°F OFF= 2°F ABOVE ON TEMP
STACK INLET TEMP CONTROL VALVE NO BYPASS FLOW 190° F MAX (70 PCT) BYPASS FLOW 178° F
32% BYPASS
HOT PREMIXING VALVE NO HOT FLOW 153° F MAX (100 PCT) HOT FLOW 148° F
CONDENSER EXIT TEMP CONTROL VALVE NO BYPASS FLOW 160° F MAX (100 PCT) BYPASS FLOW 145° F
COLD PREMIXING VALVE NO HOT FLOW 101° F MAX (100 PCT) HOT FLOW 90° F
MAX 140°F GND= 110°F AT 54KW
(T0245A) OF3/OM2 (T0345A) OF3/OM1
V45 T0145A OF2 OM2
FC1 COOL RETURN TEMP 0 TO 250°F 1 S/S C
ORBITER GSE
COOLANT LOOP DRAIN
COOLANT LOOP FILL
GSE ORBITER
COOLANT FILL FILTER 100μ
FREON COOLANT LOOP ONE
FREON OUT
ATCS/FC HX
FREON COOLANT LOOP TWO
FREON OUT
YELLOW
FUEL CELL STACK TEMP
PNL F7A2 STACK OUT TEMP <172.5°F OR >243.75°F
C&W ELEC
FC3 FC2
DSC OM 1
(TO220A) OF2/OM2 (TO320A) OF3/OM2
V45 T0120A OF1 OM1
FC1 STACK COOL OUT TEMP -75°F TO +300°F 1 S/S C&W
FUEL CELL
FC2 FC3
1 2 3
PNL O2 S3
FUEL CELL STACK TEMP
500 200 100 0 -75
PNL O2 M4
COOLANT PUMP ΔP
GRAY-COOLANT PUMP ON BP-COOLANT PUMP OFF
PNL R1 DS14 (DS15) (DS16)
FUEL CELL STARTUP HEATER 1 (2,3)
ENABLE
INHIBIT
PNL R11U S6 (S7) (S8)
VMNA (B,C) MPC1 (2,3)
VESS1BC (2CA, 3AB) FD
1.2K
5.1K
V45 SO191E OF4 NA
FC1 START UP HEATER INHIBIT
1=INHIBIT 1 S/S
(SO291E) OF4/NA (SO391E) OF4/NA
VESS1BC (2CA, 3AB) MPC1 (2, 3)
READY FOR LOAD
GRAY-FC READY BP-FC NOT READY
PNL R1 DS11 (DS15) (DS16)
5.1K
V45 XO105E OF4 NA
FC1 READY
1=READY 1 S/S
(XO205E) OF4/NA (XO305E) OF4/NA
VESS1BC (2CA, 3AB) FD
1.2K
FC1 (2,3) CNTLR
ON OFF
PNL O14 S12 (PNL O15) (S11) (PNL O16) (S11)
F6 (5,5) 3A
5.1K
V45 SO180E OF1 NA
FC1 CONTROL POWER
1=ON 1 S/S
(SO280E) OA2/NA (SO380E) OF3/NA
GRYO FUEL CELL 1 (2,3)
START STOP
PNL R1 S16 (S17) (S18)
VESS1BC (2CA, 3AB) MPC1 (2,3)
VESS1BC (2CA, 3AB) FD
VCNTLAB1 (BC1, CA1)
VCNTLAB2 (BC2, CA2)
1.2K
GSE
TIMER MODULE
TO 30 & 2 SEC ON 1 SEC OFF
TIMER START
TIMER RESET
REF PWR
K10
K10 GROUND THRU 1 TIMER
ENERGIZED AFTER TIMER OUT
R2 65Ω
R1 65Ω
K6B K6A K8 K4
K5 K9 K3 K2
NZ5 1 FROM COOLANT TEMP ENTERING STACK
COOLANT INLET TEMP SENSE ELECTRONICS
COOLANT OUT TEMP SENSE ELECTRONICS
NZ5 2 FROM COOLANT TEMP EXITING STACK

BASIC REV E-6

DATE: 08/25/91	NAME: JMB	VERSION: BPT: 4
DATE: 10/23/91	NAME: MDU	VERSION: INK: 3
DATE: 11/04/91	NAME: BJT	VERSION: INK: 4

X TIMER CHECK

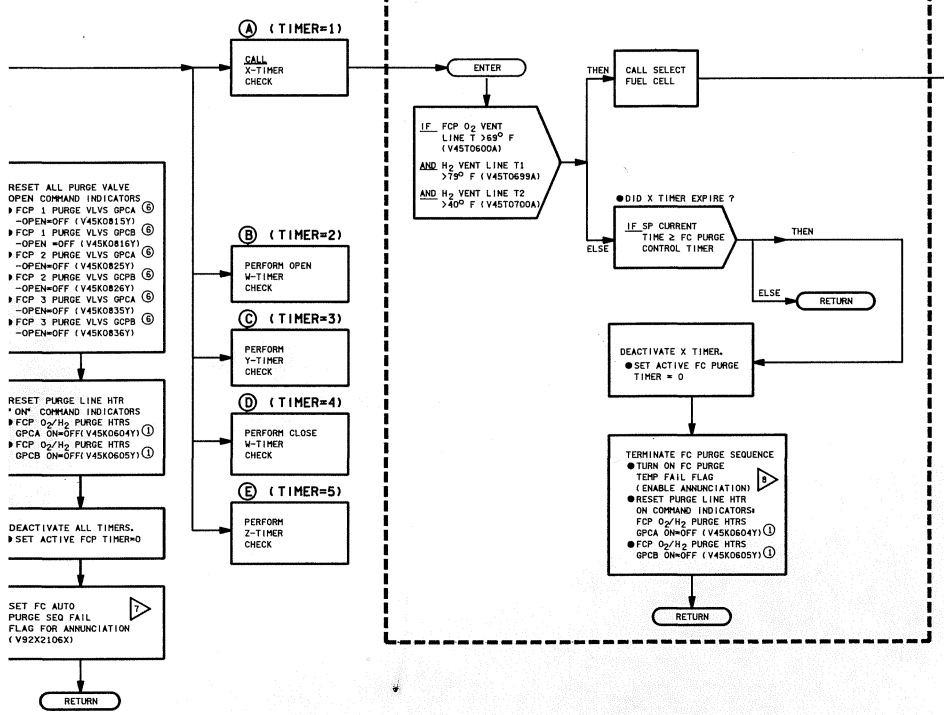

SELECT FUEL CELL

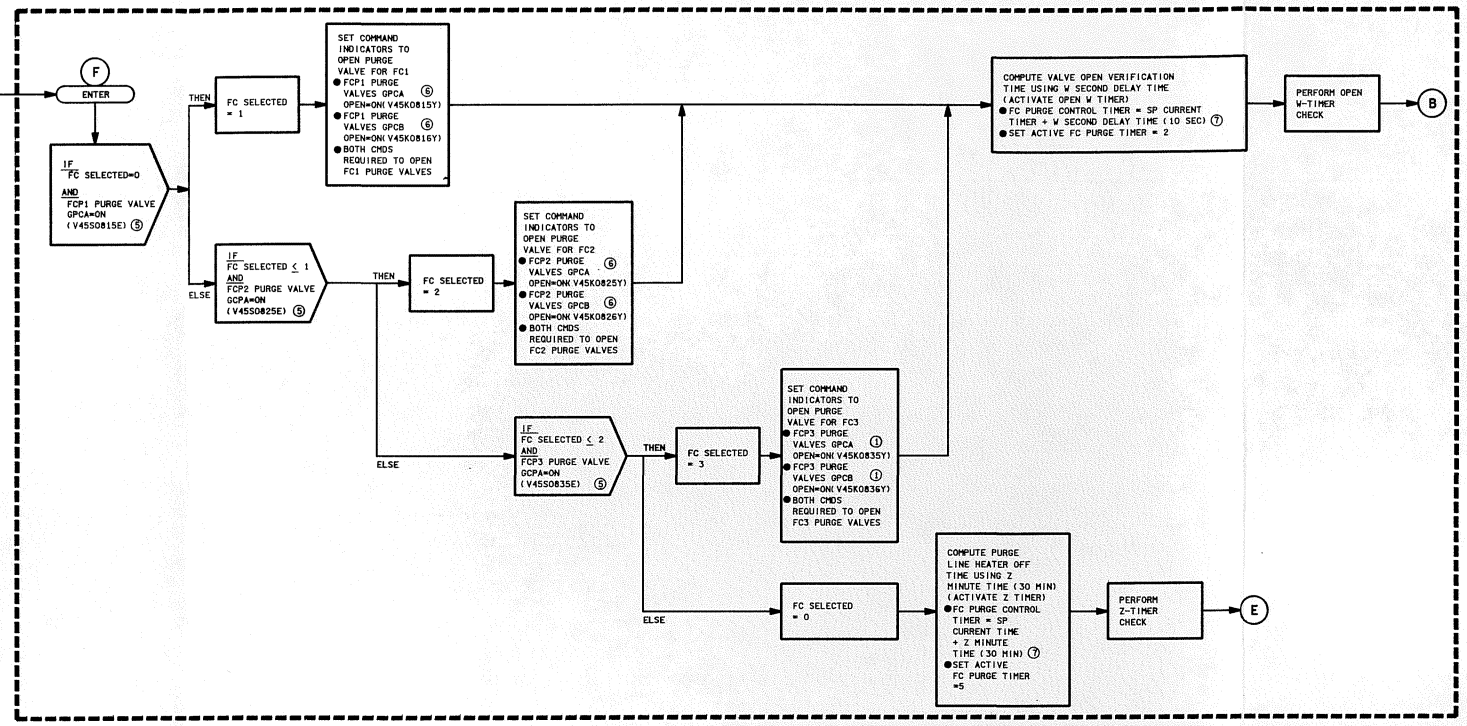

CLOSE W-TIMER CHECK

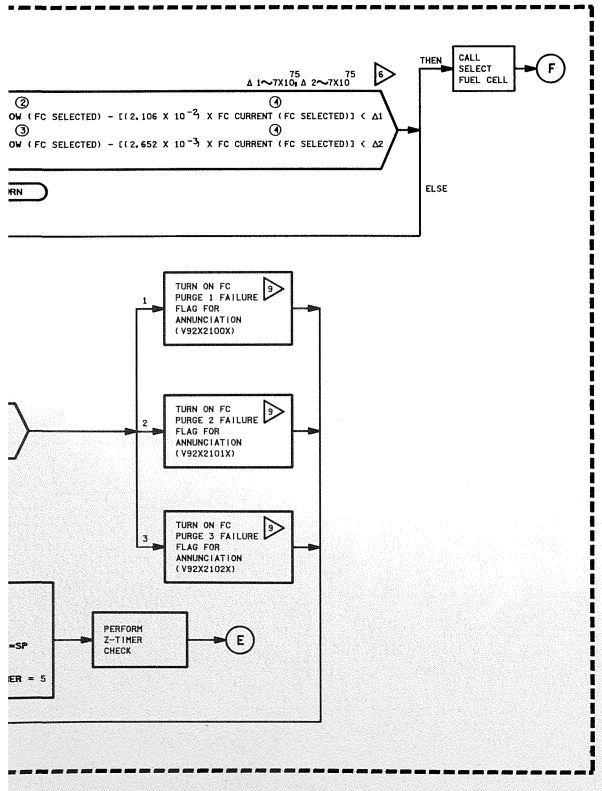

Y-TIMER CHECK

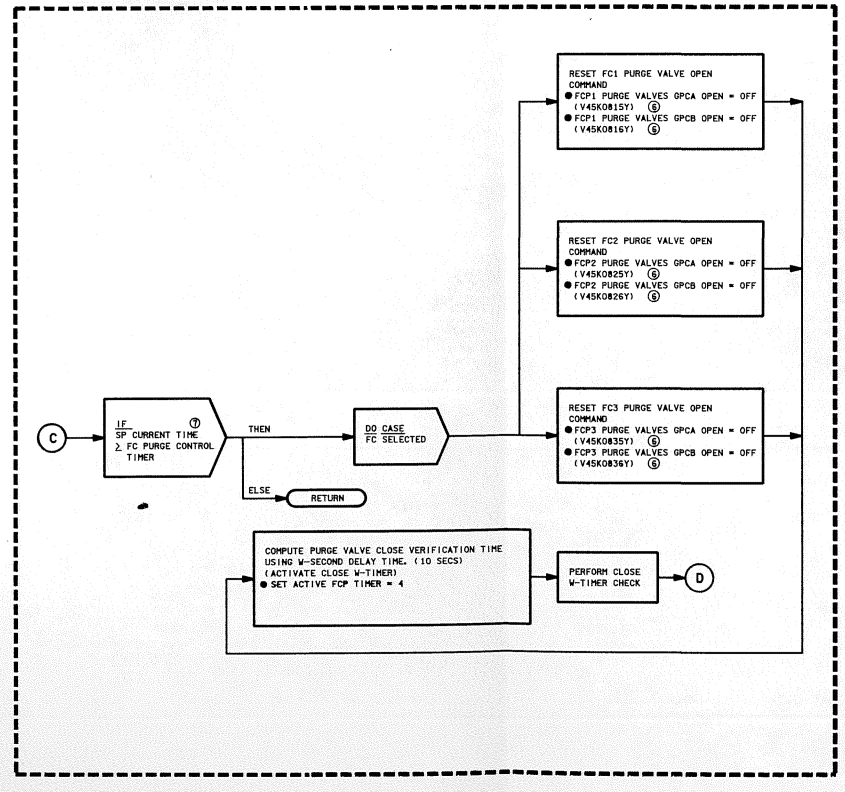

FUEL CELL CELL PERFORMANCE MONITOR (CPM)

(FC1 SHOWN FC2, 3 TYPICAL)

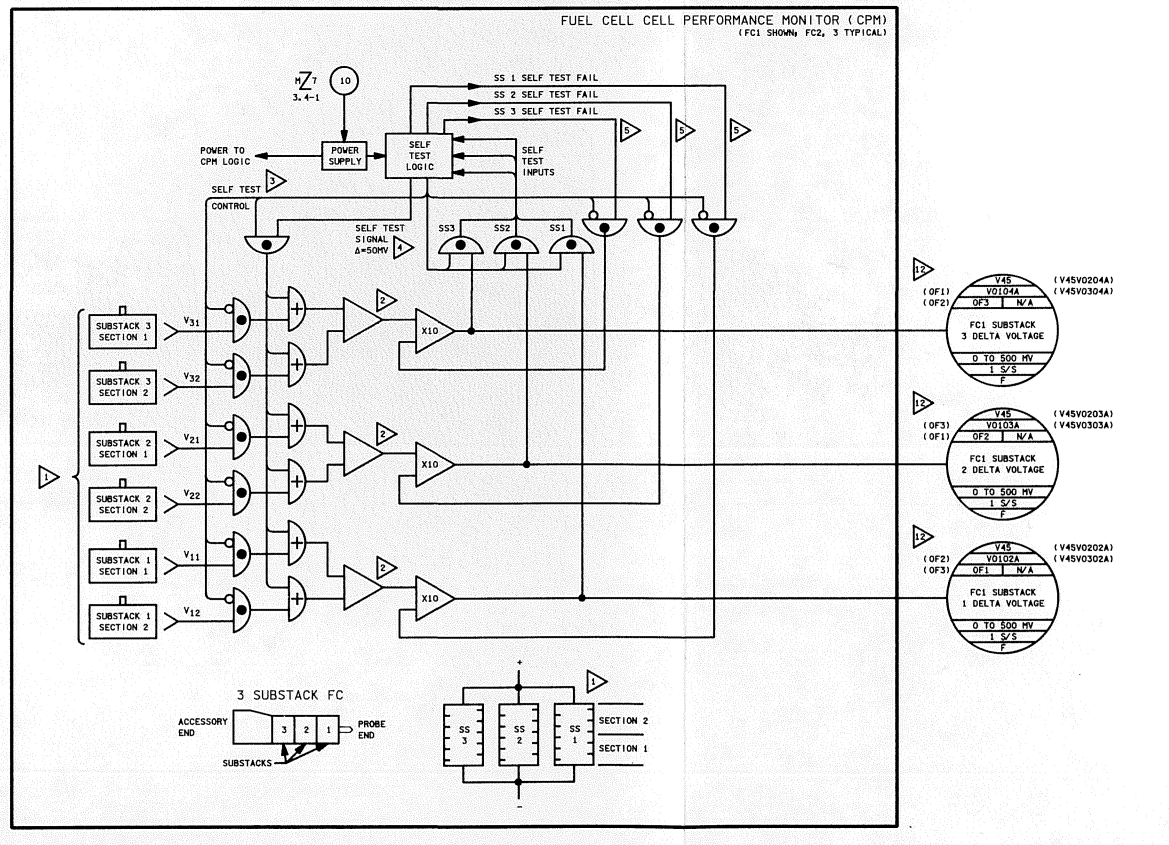

1> ANY OPS TRANSITION WILL TERMINATE FC PURGE SEQUENCE

2> AFTER 01-21 SOFTWARE INSTALLED, EXCEPT STS-46, MDM CHANNELIZATION IS OF4 FOR FC 1 ALL SUBSTACKS, OF1 FOR FC2, AND OF2 FOR FC3

3> V45X0804E FC AUTO PURGE ON DISCRETE, IS UPDATED IN THE PCMMU ONCE EACH SECOND AND IS ASYNCHRONOUSLY SAMPLED BY THE GPC ONCE EVERY TWO SECONDS. THE V45X0804E BIT MAY NOT BE SET IN THE GPC UNLESS THE GPC PURGE SEQUENCE START SWITCH IS HELD FOR THREE SECONDS AFTER THE TALKBACK INDICATES GRAY (PURGE HEATERS COMMANDED ON). THIS WOULD CAUSE THE FC PURGE SEQ SM ALERT

10. SEE TABLE 3-I FOR VENDOR DRAWING REFERENCES

9> CAUSES FC PURGE 1 (2,3) SM ALERT

8> CAUSES FC PURGE TEMP SM ALERT

7> CAUSES FC PURGE SEQ SM ALERT

6> Δ1 AND Δ2 ARE SET VERY LARGE IN ORDER TO EFFECTIVELY DISABLE THE O_2 AND H_2 FLOW CHECKS DURING PURGE. Δ3 AND Δ4 ARE SET VERY SMALL FOR THE SAME REASON

5> GENERATED IF DURING SELF TEST, ANY ΔVOLTS MEASUREMENT IS NOT BETWEEN 575 AND 425 MV AT OUTPUT OF X 10 AMPLIFIER. (DISPLAYED TO GROUND AND CREW AS 58 TO 43 MV). RESET AT BEGINNING OF EACH SELF TEST PERIOD. SELF TEST FAIL SIGNAL DRIVES THE OUTPUT TO OSH (TM TO 500 MV). THE FAIL SIGNAL IS RESET AT THE BEGINNING OF EACH SELF TEST PERIOD

4> SELF TEST SIGNAL OF 50 MV APPLIED TO CIRCUIT INPUTS FOR 2.350.5 SECONDS. SUBSTACK DELTA VOLTS MEASUREMENT INTERRUPTED DURING THIS PERIOD

3> SELF TEST OCCURS EVERY 7:51 MINUTES TO EACH CPM. (REGARDLESS OF WHETHER OR NOT IT HAS PREVIOUSLY FAILED SELF TEST)

2> DIFFERENTIAL AMPLIFIERS. OUTPUT ABSOLUTE VALUE OF VOLT DIFFERENCE BETWEEN SUBSTACK SECTIONS. CREW/GROUND ALERTS OCCUR IN SM, BFS AT ΔV=150MV

NOTES: 1> EACH SUBSTACK CONSISTS OF 32 SERIES CONNECTED CELLS. THE THREE SUBSTACKS ARE CONNECTED IN PARALLEL. THE CPM COMPARES THE VOLTAGE OF ONE-HALF OF A SUBSTACK (16 CELLS) TO THE OTHER HALF OF THE SAME SUBSTACK

4 FU CELL PRG 2

SIGNATURE	DATE	NATIONAL AERONAUTICS AND SPACE ADMINISTRATION LYNDON B. JOHNSON SPACE CENTER HOUSTON, TEXAS
DSGN KENNETH POGUE	5/11/81	
DR KENNETH POGUE	5/11/81	FUEL CELL AUTO PURGE AND CELL PERFORMANCE MONITOR
ENGR B. PAWLIK		
ENGR	11/1/91	
APP	11/1/91	
APP		SPACE SHUTTLE — DWG NO 3.4
OMNIPLAN S.K. Kimbrow	11-12-91	ALL
LTR E PCN 1		82.5 X 34 — PAGE 3.4-2 — SHEET 2 OF 8

BASIC REV E-1

DATE: 11/04/91 | NAME: BJT | VERSION: INK.4

(1) FROM PF2

(2) O_2 FLOW
FC1: V45R0160A
FC2: V45R0260A
FC3: V45R0360A

(3) H_2 FLOW
V45R0170A
V45R0270A
V45R0370A

(4) FC CURRENT
V45C0101A
V45C0201A
V45C0301A

(5) SWITCH SCANS

(6) FROM PF1

(7) SP CURRENT TIME = SPECIAL PROCESSOR CURRENT TIME (ESSENTIALLY MISSION ELAPSED TIME)

(8) THE Y MINUTE TIME VALUE IS CHANGEABLE VIA TMBU. THE MSIDS ARE V92W0636C (367C, 638C) FOR FC 1 (2,3). DEFAULT Y VALVE IS 2 ½ MINUTES

ENTER
● CALLED EVERY 2 SEC

IF ANY FCP TIMERS #0 (AUTO PURGE SEQ IN PROGRESS)
● X TIMER
● OPEN W TIMER
● Y TIMER
● CLOSE W TIMER
● Z TIMER

THEN

IF FC PURGE ON DISCRETE =ON
● V45X0804E
● PURGE LINE HEATERS POWERED

THEN

DO CASE ON ACTIVE FC PURGE TIMER

ELSE

IF FUEL CELL GPC PURGE SEQ START=OFF (1) (V72K6050Y) (PURGE SEQ SW) AND V92X0634X=0 (TMBU)

THEN

PERFORM TERMINATE FC PURGE SEQUENCE

ELSE

RETURN

ELSE

IF FC GPC SEQUENCE START=ON (1) V72K6050Y OR V92X0634X (PURGE SEQ SW OR TMBV (INIT)

AND FCP O_2/H_2 PURGE HTRS GPCA ON=ON — V45S0604E PURGE HTR TO GPC

AND (FCP 1,2,OR 3 PURGE VLVS GCPA=TRUE) — PURGE VLVS TO GPC: FC1V45S0815E, FC2V45S0825E, FC3V45S0835E (5)

THEN

PERFORM INITIATE FC PURGE SEQUENCE

ELSE

RETURN

SET PURGE HEATER "ON" COMMAND INDICATORS
● FCP O_2/H_2 PURGE HTRS GPCA ON=ON (V45K0604Y) (1)
● FCP O_2/H_2 PURGE HTRS GPCB ON=ON (V45K0605Y) (1)

PREPARE PURGE LINE TEMP CHECK USING X MINUTE DELAY TIME (27 MIN)
● FC PURGE CONTROL TIMER = SP CURRENT TIME + X MINUTE TIME (7)
● SET ACTIVE FCP TIMER = 1

TURN OFF ALL FC PURGE SEQ FAILURE FLAGS (ANNUNCIATION INDICATOR)
● FC PURGE TEMP FAIL
● FC PURGE 1 FAIL
● FC PURGE 2 FAIL
● FC PURGE 3 FAIL
● FC AUTO PURGE SEQ FAIL

SET FC SELECTED =0

CALL X TIMER CHECK → (A)

RESET ALL PURGE VALVE OPEN COMMAND INDICATORS
● FCP 1 PURGE VLVS GPCA -OPEN=OFF (V45K0815Y) (6)
● FCP 1 PURGE VLVS GPCB -OPEN =OFF (V45K0816Y) (6)
● FCP 2 PURGE VLVS GPCA -OPEN=OFF (V45K0825Y) (6)
● FCP 2 PURGE VLVS GCPB -OPEN=OFF (V45K0826Y) (6)
● FCP 3 PURGE VLVS GPCA -OPEN=OFF (V45K0835Y) (6)
● FCP 3 PURGE VLVS GCPB -OPEN=OFF (V45K0836Y) (6)

RESET PURGE LINE HTR "ON" COMMAND INDICATORS
● FCP O_2/H_2 PURGE HTRS GPCA ON=OFF (V45K0604Y) (1)
● FCP O_2/H_2 PURGE HTRS GPCB ON=OFF (V45K0605Y) (1)

DEACTIVATE ALL TIMERS, ● SET ACTIVE FCP TIMER=0

SET FC AUTO PURGE SEQ FAIL FLAG FOR ANNUNCIATION (V92X2106X)

RETURN

(A) (TIMER=1) CALL X-TIMER CHECK
(B) (TIMER=2) PERFORM OPEN W-TIMER CHECK
(C) (TIMER=3) PERFORM Y-TIMER CHECK
(D) (TIMER=4) PERFORM CLOSE W-TIMER CHECK
(E) (TIMER=5) PERFORM Z-TIMER CHECK

Z-TIMER CHECK

(E) → IF SP CURRENT TIME (7) ≥ FC PURGE CONTROL TIMER

THEN → DEACTIVATE Z TIMER ● SET ACTIVE FC PURGE TIMER = 0

ELSE → RETURN

RESET PURGE LINE HEATER ON COMMAND INDICATORS
● FCP O_2/H_2 PURGE HTRS GPCA ON =OFF (45K0604Y)
● FCP O_2/H_2 PURGE HTRS GPCB ON = OFF (45K0605Y)

RETURN

OPEN W-TIMER CHECK

(B) → IF SP CURRENT TIME (7) ≥ FC PURGE CONTROL TIMER

THEN → IF O_2 FLOW (2) (FC SELECTED) − ((2.106 X 10^{-3} X FC CURRENT (4) (FC SELECTED)) > $\Delta 3^{75}_{-7X10}$ $\Delta 4^{75}_{-7X10}$
AND H_2 FLOW (3) (FC SELECTED) − ((2.652 X 10^{-3} X FC CURRENT (4) (FC SELECTED)) > $\Delta 4^{75}_{-7X10}$

THEN → COMPUTE PURGE VALVE CLOSE TIME USING Y MINUTE TIME (ACTIVATE Y TIMER) (8)
● FC PURGE CONTROL TIMER = SP CURRENT TIME + (Y MINUTE TIME X 60) (7)
● SET ACTIVE FC PURGE TIMER = 3

ELSE → RETURN

ELSE

DO CASE FC SELECTED

1 → TURN ON FC PURGE 1 FAIL FLAG FOR ANNUNCIATION (V92X2100X) (A) → RESET FC1 PURGE VLV OPEN COMMAND INDICATORS ● FCP1 PURGE VLVS GPCA OPEN = OFF (V45K0815Y) (6) ● FCP1 PURGE VLVS GPCB OPEN = OFF (V45K0816Y) (6)

2 → TURN ON FC PURGE 2 FAIL FLAG FOR ANNUNCIATION (V92X2101X) (A) → RESET FC2 PURGE VLV OPEN COMMAND INDICATORS ● FCP2 PURGE VLVS GPCA OPEN = OFF (V45K0825Y) (6) ● FCP2 PURGE VLVS GPCB OPEN = OFF (V45K0826Y) (6)

3 → TURN ON FC PURGE 3 FAIL FLAG FOR ANNUNCIATION (V92X2102X) (A) → RESET FC1 PURGE VLV OPEN COMMAND INDICATORS ● FCP3 PURGE VLVS GPCA OPEN = OFF (V45K0835Y) (6) ● FCP3 PURGE VLVS GPCB OPEN = OFF (V45K0836Y) (6)

PERFORM Y-TIMER CHECK → (C)

CALL SELECT FUEL CELL → (F)

CLOSE W-TIMER CHECK

(D) → IF SP CURRENT TIME (7) ≥ FC PURGE CONTROL TIMER

THEN → IF O_2 FLOW (2) (FC SELECTED) − ((2.106 X 10^{-3} X FC CURRENT (4) (FC SELECTED)) < $\Delta 1^{75}_{-7X10}$ $\Delta 2^{75}_{-7X10}$
AND H_2 FLOW (3) (FC SELECTED) − ((2.652 X 10^{-3} X FC CURRENT (4) (FC SELECTED)) <

ELSE → RETURN

DO CASE FC SELECTED

1 → TURN ON FC PURGE 1 FAILURE FLAG FOR ANNUNCIATION (V92X2100X)

2 → TURN ON FC PURGE 2 FAILURE FLAG FOR ANNUNCIATION (V92X2101X)

3 → TURN ON FC PURGE 3 FAILURE FLAG FOR ANNUNCIATION (V92X2102X)

COMPUTE PURGE LINE HTR OFF TIME USING Z-MINUTE TIME (ACTIVATE Z TIMER) (30 MIN)
● FC PURGE CONTROL TIMER =SP CURRENT TIME + Z MINUTE TIME (7)
● SET ACTIVE FC PURGE TIMER = 5

PERFORM Z-TIMER CHECK → (E)

BASIC REV E-1

DATE: 10/10/90	NAME: VSH	VERSION: BPT; 2
DATE: 10/12/90	NAME: LAM	VERSION: INK; 1
DATE: 10/18/90	NAME: JDF	VERSION: INK; 2

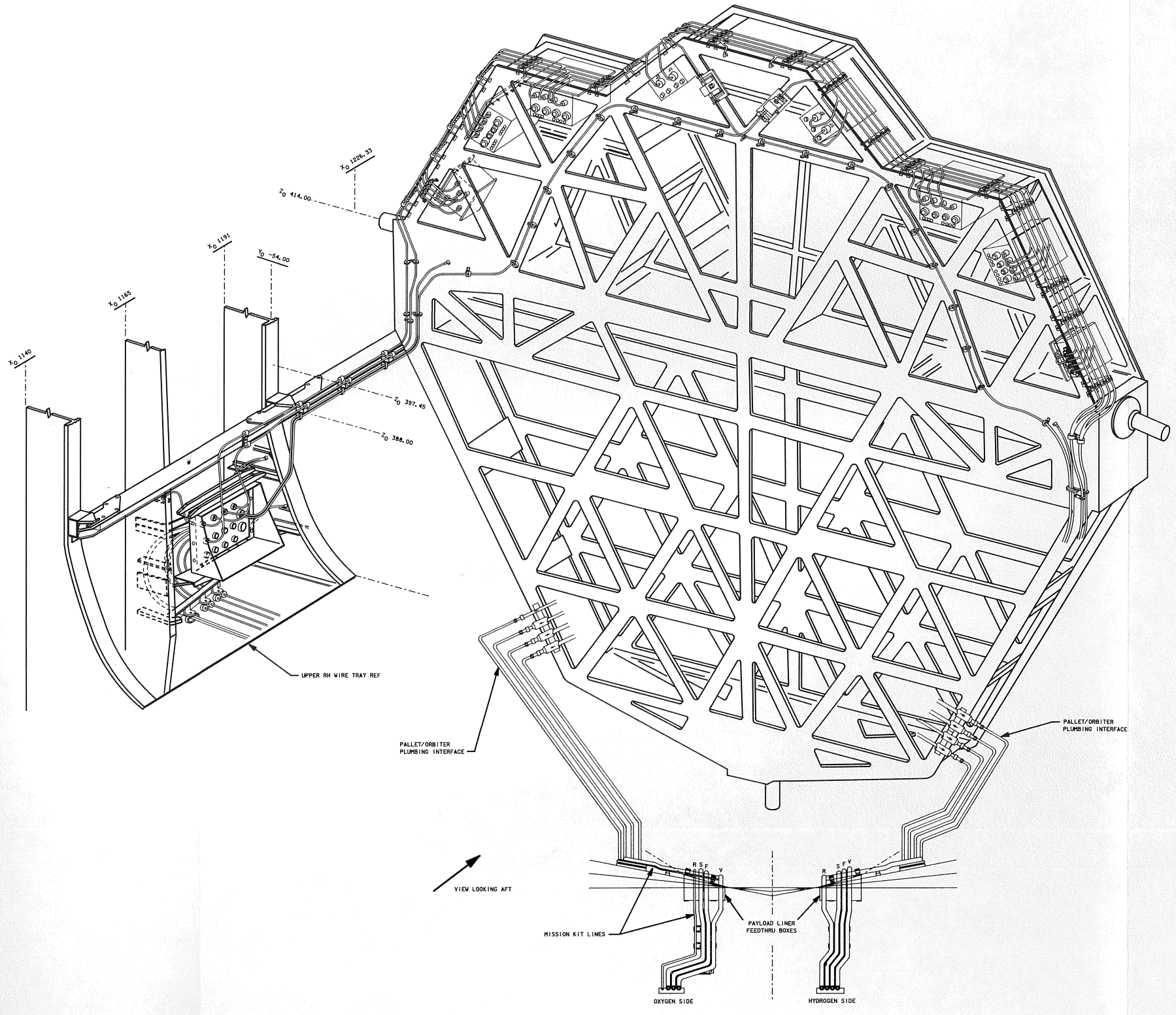

PALLET/ORBITER INTERFACE LAYOUT
CRYO AND AVIONICS

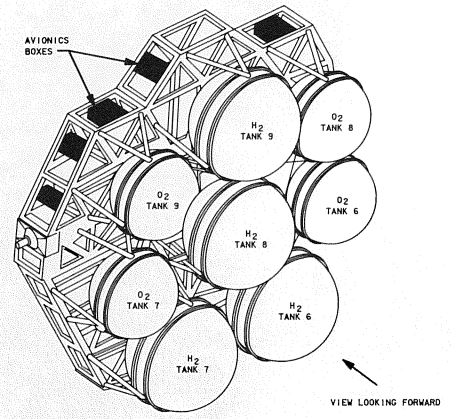

EDO PALLET/CRYO TANKS

2 EACH PANEL TYPE IS TYPICAL FOR TANKS 6,7,8,9

NOTES: 1. REFER TO TABLE 3-I FOR VENDOR DRAWING REFERENCES

5 EDO PALLET 1

SIGNATURE	DATE	NATIONAL AERONAUTICS AND SPACE ADMINISTRATION LYNDON B. JOHNSON SPACE CENTER HOUSTON, TEXAS	
DSGN VICKI S. HUNTER	10/1/90		
DR		EDO PALLET	
ENGR T.W. SCHAFER			
ENGR Todd W Schafer	10/17/90		
APP Paul M Fayer	11/13/90		
APP		SPACE SHUTTLE	DWG NO 3.5
OMNIPLAN S.K. Kimbrell	11-1-90	EDO	
LTR E	PCN	121 X 34	PAGE / SHEET 1 OF 1

BASIC REV E

T S R Q P O N M L K J

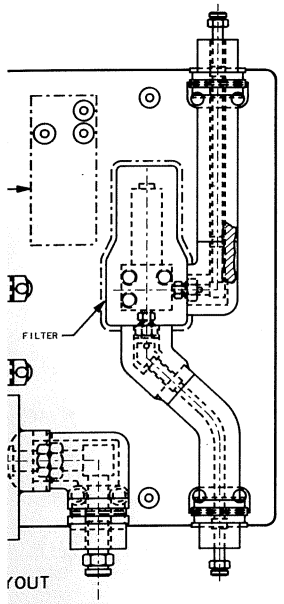

YOUT

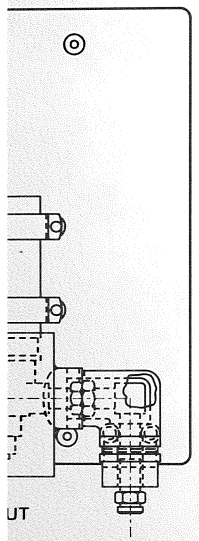

UT

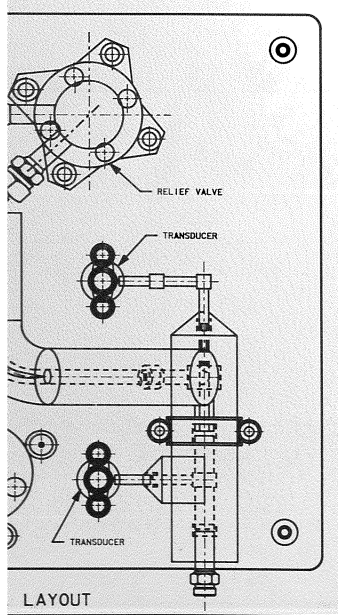

LAYOUT

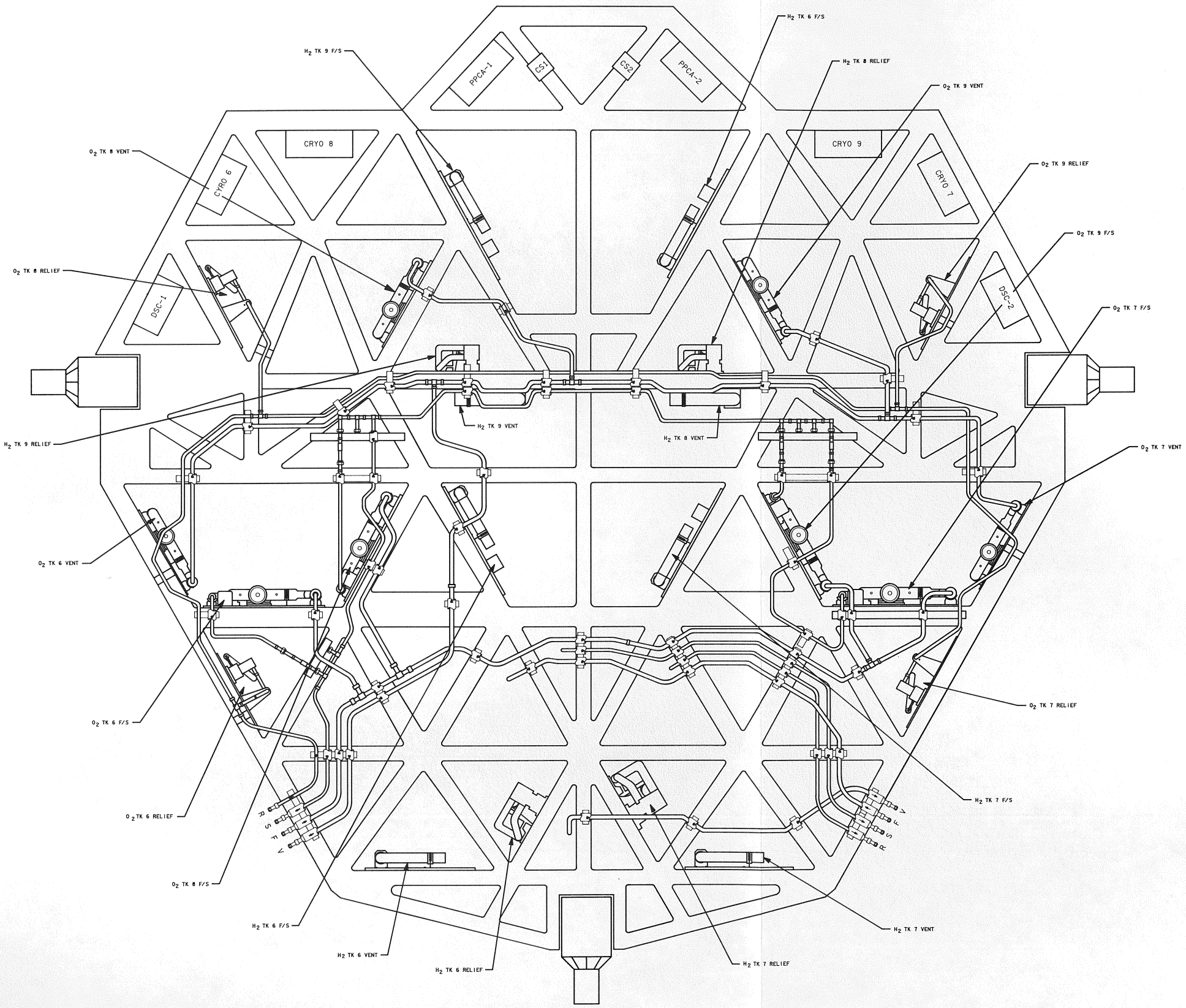

VIEW LOOKING AFT

EDO PALLET WITH VALVE PANELS AND AVIONICS BOXES

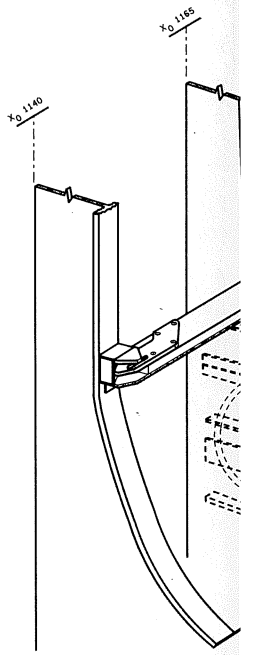

DATE: 10/18/90 | NAME: JDF | VERSION: INK2

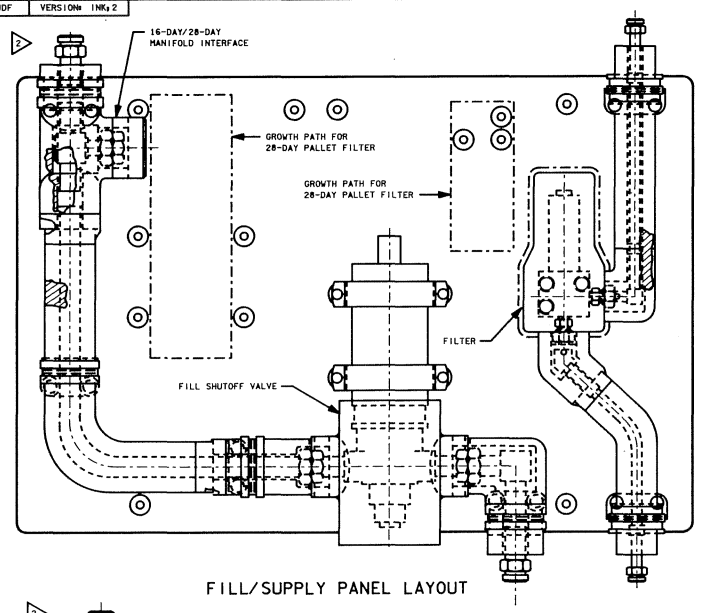

FILL/SUPPLY PANEL LAYOUT

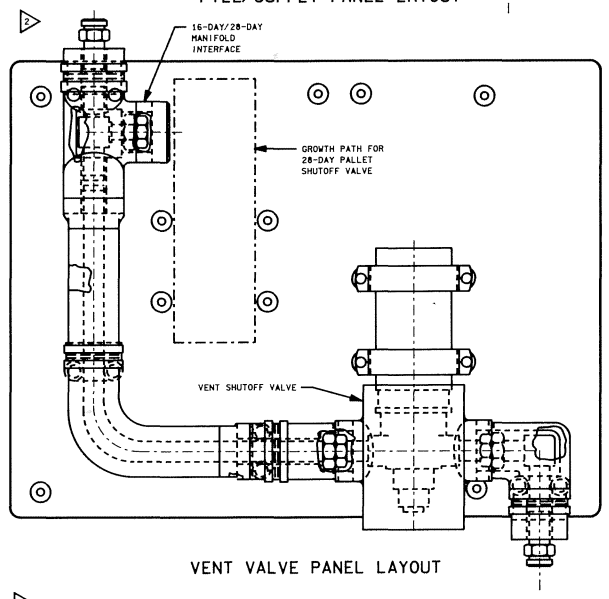

VENT VALVE PANEL LAYOUT

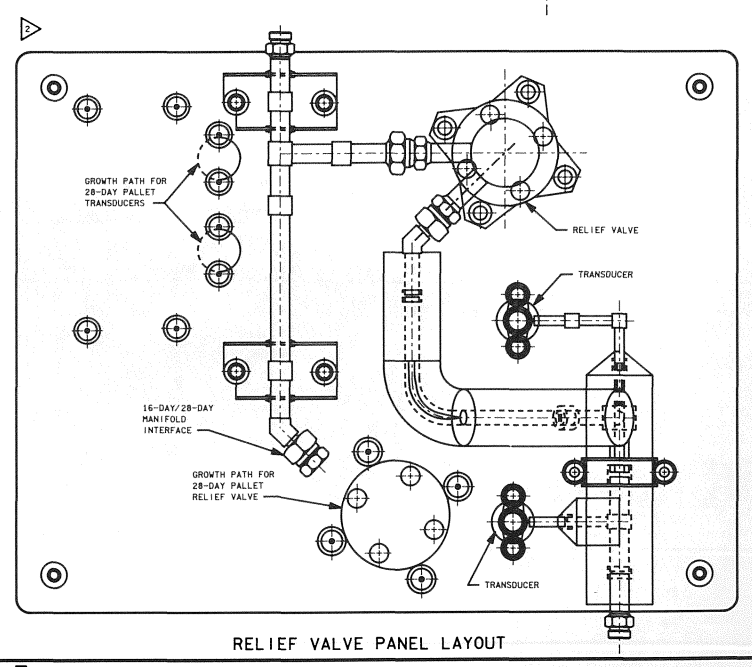

RELIEF VALVE PANEL LAYOUT

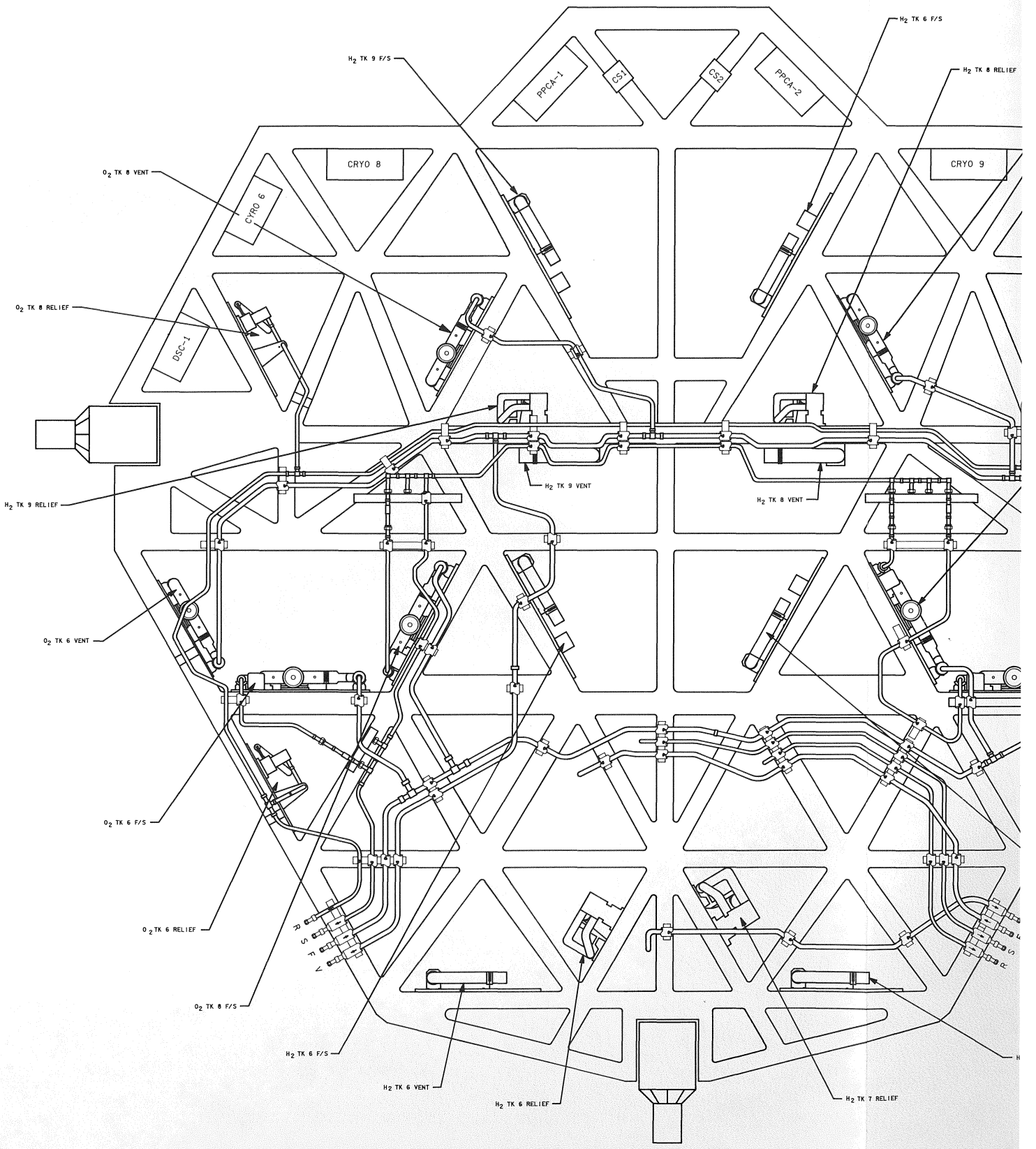

VIEW LOOKING AFT

EDO PALLET WITH VALVE PANELS AND AVIONICS BOXES

BASIC REV E

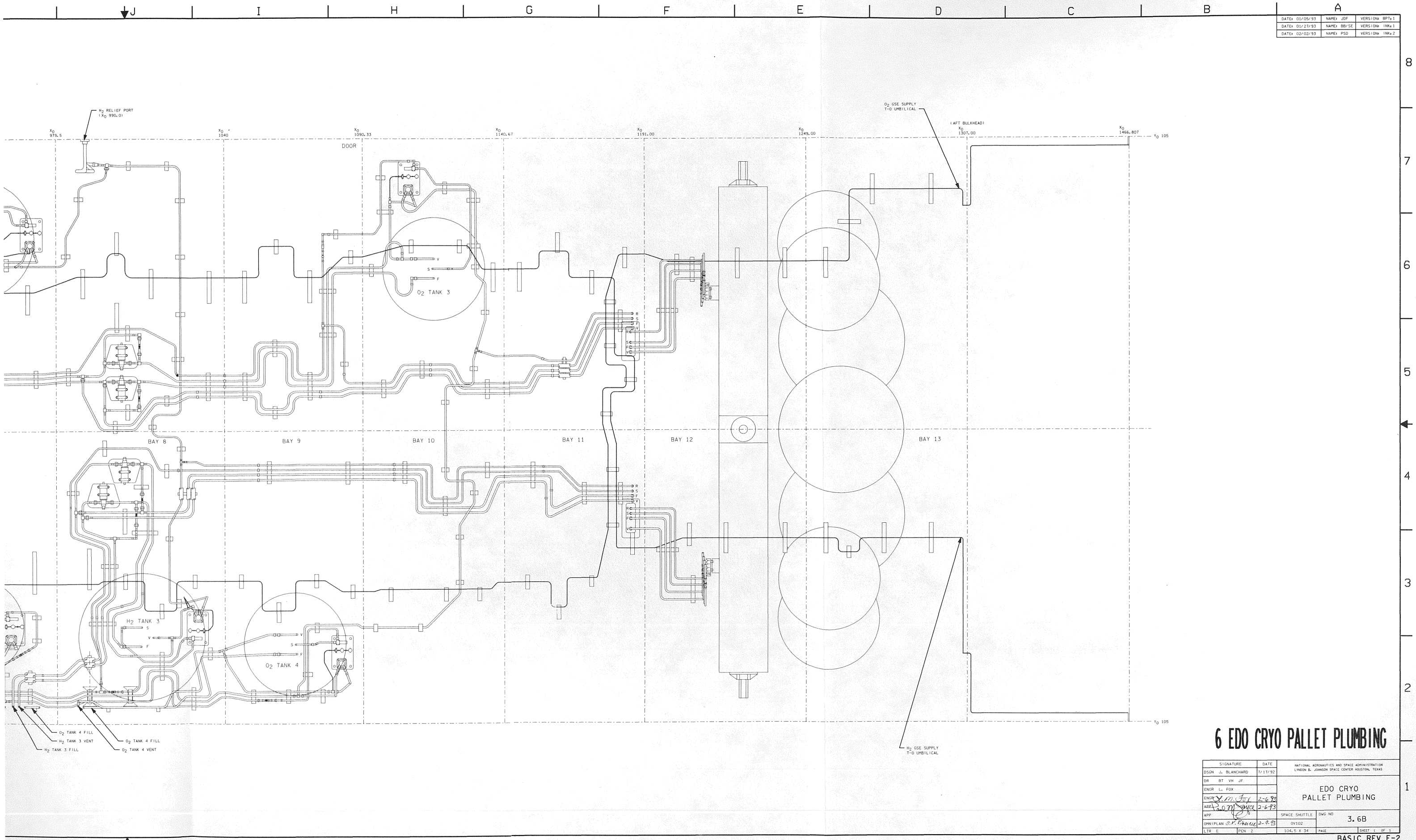

DATE: 01/05/93	NAME: JDF	VERSION: BPT:1
DATE: 01/27/93	NAME: BB/SE	VERSION: INK:1
DATE: 02/02/93	NAME: PSD	VERSION: INK:2

6 EDO CRYO PALLET PLUMBING

SIGNATURE	DATE	NATIONAL AERONAUTICS AND SPACE ADMINISTRATION LYNDON B. JOHNSON SPACE CENTER HOUSTON, TEXAS
DSGN J. BLANCHARD	7/17/92	
DR BT VH JF		EDO CRYO PALLET PLUMBING
ENGR L. FOX		
ENGR L. M. Fox	2-6-93	
ARR Paul M. Joyce	2-6-93	
APP		SPACE SHUTTLE OV102 — DWG NO 3.6B
OMNIPLAN S. P. Pinnell	2-9-93	
LTR E — PCN 2		104.5 X 34 — PAGE — SHEET 1 OF 1

BASIC REV E-2

DATE: 02/02/93 | NAME: PSD | VERSION: INK+2

S R Q P O N M L K J

8 7 6 5 4 3 2 1

Y_0 105

X_0 582 | X_0 636 | X_0 693 | X_0 750 | X_0 807 | X_0 863 | X_0 919 | X_0 979.5

O_2 HORIZ DRAIN (X_0 743.0)

H_2 OVERBRD RELIEF PORT (X_0 822.70)

H_2 RELIEF PORT (X_0 990.0)

FUEL CELL 2

FUEL CELL 3

FUEL CELL 1

O_2 TANK 2

H_2 TANK 2

H_2 TANK 4

H_2 TANK 5

O_2 TANK 1

H_2 TANK 1

O_2 TANK 5

H_2 TANK 3

BAY 1 | BAY 2 | BAY 3 | BAY 4 | BAY 5 | BAY 6 | BAY 7 | BA

FCP COOLANT DRAIN 1
FCP COOLANT FILL 1
FCP COOLANT DRAIN 2
FCP COOLANT DRAIN 3
FCP COOLANT FILL 3
FCP COOLANT FILL 2

O_2 RELIEF PORT (X_0 760.0)

O_2 TANK 3, 4, 5 RELIEF LINE

O_2 TANK 2 VENT
O_2 TANK 2 FILL
H_2 TANK 1 VENT
H_2 TANK 1 FILL
O_2 TANK 1 VENT
O_2 TANK 1 FILL
H_2 TANK 2 FILL
H_2 TANK 2 VENT

H_2 HORIZ DRAIN

O_2 TANK 3, 4, 5 RELIEF LINE

O_2 TANK 4 FILL
O_2 TANK 5 FILL
H_2 TANK 5 VENT
O_2 TANK 5 VENT
O_2 TANK 3 FILL
O_2 TANK 3 VENT
H_2 TANK 5 FILL
H_2 TANK 4 VENT
H_2 TANK 4 FILL
H_2 HORIZ DRAIN

H_2 TANK 3 VENT
H_2 TANK 3 FILL
O_2 TANK 4 FILL
O_2 TANK 4 VENT

BASIC REV E-2

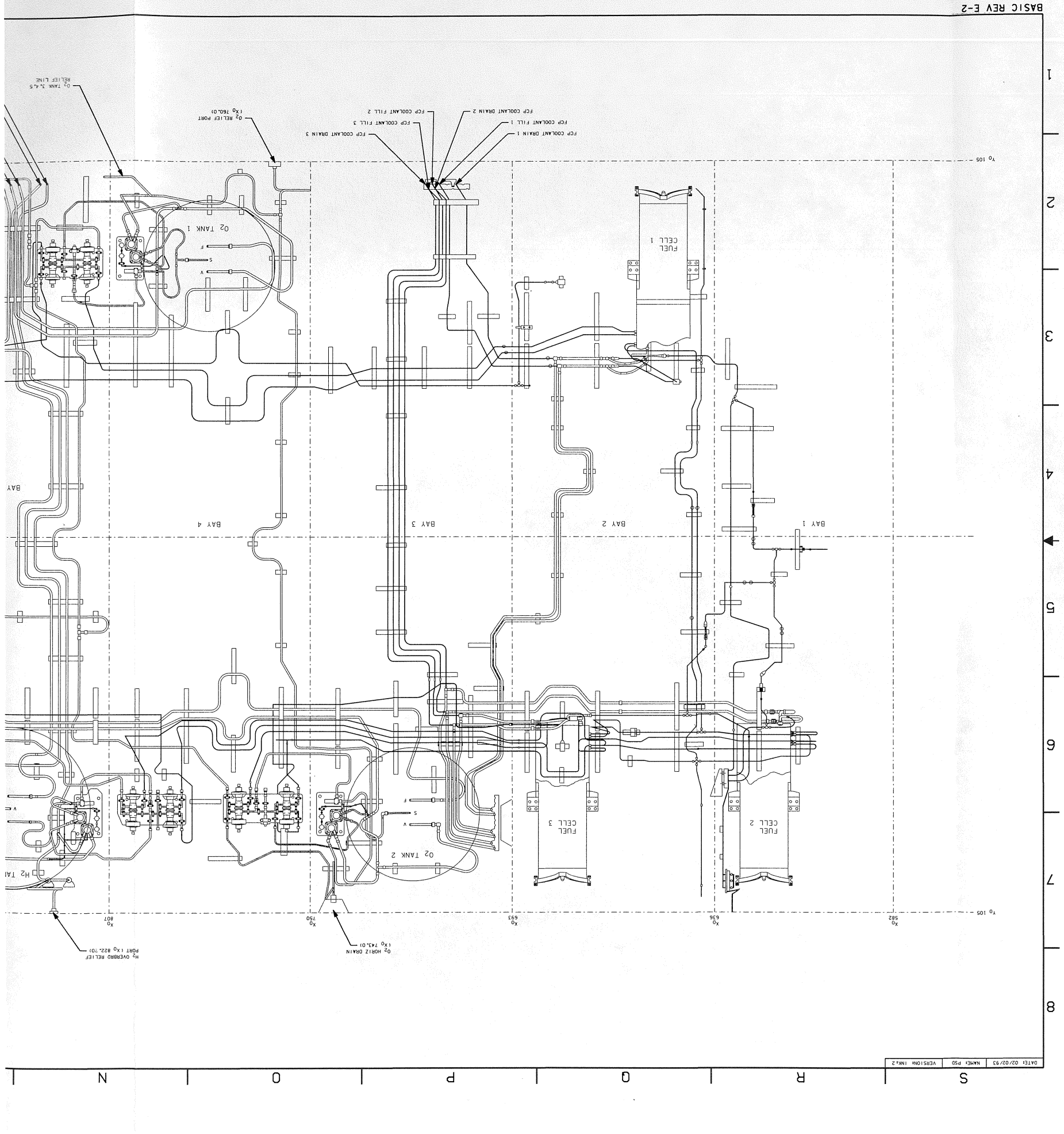

DATE 02/02/93	NAME PSD	VERSION INK.2

FOR DETAILED COMPONENT AND LOGIC INFORMATION REFER TO:

SSSH DWG NO.	SSSH DWG TITLE	VENDOR NAME	VENDOR DWG NO.	VENDOR SHEET NO.	REV	DATE	VENDOR DRAWING TITLE
3.1 (SHEET 1)	FUEL CELL/REACTANT STORAGE OVERVIEW	ROCKWELL	VS70-450212	ALL	C	7/5/84	SCHEMATIC DIAGRAM - CRYO SUBSYSTEM
		ROCKWELL	VS70-450222	ALL	B	10/10/83	SCHEMATIC DIAGRAM - CRYO SUBSYSTEM
		ROCKWELL	VS70-450219	ALL	B01	5/23/89	SCHEMATIC DIAGRAM - CRYO SUBSYSTEM
		NASA/ SHUTTLE OPERATIONS DATA BOOK VOL. I	NSTS-08934 SEC. 4.4.2	1-9	E	8/14/90	POWER REACTANT STORAGE AND DISTRIBUTION
3.1 (SHEET 2)	PALLET REACTANT STORAGE OVERVIEW	R.I	ECN 105-0044	ALL	A4	1/23/90	PRSD MODS FOR THE 28-DAY MISSION EXTENSION KIT ON OV-105
		R.I.	VS70-945102	ALL	G	7/20/90	INTEGRATED SYSTEM SCHEMATIC ORBITER OV-102 EPS
		R.I.	SSV90-7	ALL	—	3/19/90	EXTENDED DURATION ORBITER CRITICAL DESIGN REVIEW (PRELIMINARY DOCUMENT)
3.2 (SHEETS 1-4)	0_2 REACTANT STORAGE	ROCKWELL	VS70-945099	ALL	A11	7/27/90	INTEGRATED SYSTEM SCHEMATIC ELECTRICAL POWER SUBSYSTEM ORBITER VEHICLES - 099, 103 and 104
3.2 (SHEET 5)	O_2 REACTANT STORAGE OV-105	R.I.	VS70-450205	ALL	A	8/28/89	SCHEMATIC DIAGRAM - CRYO SUBSYSTEM OV-105
3.2 (SHEETS 6-7)	PALLET O_2 REACTANT TANKS 6 & 7 (8 & 9)	R.I.	ECN 105-0044	ALL	A4	1/23/90	PRSD MODS FOR THE 28-DAY MISSION EXTENSION KIT ON OV-105
		R.I.	VS70-945102	ALL	G	7/20/90	INTEGRATED SYSTEM SCHEMATIC ORITER OV-102 EPS
		JSC	SCR 90118	ALL	A	8/23/90	EDO SM MODIFICATIONS
3.3 (SHEETS 1-4)	H_2 REACTANT STORAGE	ROCKWELL	VS70-945102	ALL	G07	8/2/90	INTEGRATED SYSTEM SCHEMATIC ORBITER OV-102 EPS
		ROCKWELL	VS70-450212	ALL	C	7/5/84	SCHEMATIC DIAGRAM - CRYO SUBSYSTEM
		ROCKWELL	VS70-450222	ALL	B	10/10/83	SCHEMATIC DIAGRAM - CRYO SUBSYSTEM
		ROCKWELL	VS70-450219	ALL	B01	5/23/89	SCHEMATIC DIAGRAM - CRYO SUBSYSTEM
		ROCKWELL	V070-454929	ALL	D/E01	4/11/90	ELECTRICAL POWER SUBSYSTEM INSTL - R. H. SIDE Xo 693.0 - Xo 919.0
		ROCKWELL	V070-454928	ALL	D/E02	4/11/90	ELECTRICAL POWER SUBSYSTEM L. H. INSTALLATION Xo 693 - Xo 919
		ROCKWELL	V070-454031	ALL	J/K02	7/11/90	ELECTRICAL POWER SUBSYSTEM L. H. INSTALLATION Xo 693 - Xo 919
		ROCKWELL	V070-454041	ALL	J	7/8/88	ELECTRICAL POWER SUBSYSTEM INSTL - R. H. SIDE Xo 693.0 - Xo 919.0
		ROCKWELL	M072-454001	ALL	M	9/12/90	PRSD SYSTEM TANK SET 3 TECH ORDER INSTALLATION MODEL MV0544A (OV-102)
		ROCKWELL	M072-454004	ALL	F	7/7/89	PRSD SYSTEM TANK SET 3 TECH ORDER INSTALLATION MODEL MV0544A (OV-103)
		ROCKWELL	M072-454011	ALL	E/F05	5/4/89	PRSD SYSTEM TANK SET 3 TECH ORDER INSTALLATION MODEL MV0544A (OV-104)
		ROCKWELL	M072-454002	ALL	M	5/22/89	PRSD SYSTEM TANK SET 4 TECH ORDER INSTALLATION MODEL MV0525A (OV-102)
		ROCKWELL	M072-454006	ALL	D	7/25/89	PRSD SYSTEM TANK SET 4 TECH ORDER INSTALLATION MODEL MV0525A (OV-103)
		ROCKWELL	M072-454012	ALL	D/E05	5/4/89	PRSD SYSTEM TANK SET 4 TECH ORDER INSTALLATION MODEL MV0525A (OV-104)
		ROCKWELL	M072-454008	ALL	J	9/10/90	PRSD SYSTEM TANK SET 5 TECH ORDER INSTALLATION MODEL MV0566A (OV-102)

DWG	SIGNATURE	DATE	DWG	SIGNATURE	DATE
3.1-1	ENGR S. HIRSHORN		3.2-7	ENGR R. AL-AYOUBI	
	ENGR Steve Hirshorn	10/29/90		ENGR Rami Al-Ayoubi	10/29/90
3.1-2	ENGR R. AL-AYOUBI		3.3,1-4	ENGR S. HIRSHORN	
	ENGR Rami Al-Ayoubi	10/29/90		ENGR Steve Hirshorn	10/29/90
3.2,1-5	ENGR S. HIRSHORN			APP Paul M Joyce	11/1/90
	ENGR Steve Hirshorn	10/29/90		APP	
3.2-6	ENGR L. MINTER			OMNIPLAN	
	ENGR Larry Minter	10/29/90		LTR E PCN	

NATIONAL AERONAUTICS AND SPACE ADMINISTRATION
LYNDON B. JOHNSON SPACE CENTER HOUSTON, TEXAS

VENDOR DRAWING REFERENCES

SPACE SHUTTLE	TBL NO 3-I	
ALL	PAGE 3.I-1	SHEET 1 OF 2

BASIC REV E

FOR DETAILED COMPONENT AND LOGIC INFORMATION REFER TO:

SSSH DWG NO.	SSSH DWG TITLE	VENDOR NAME	VENDOR DWG NO.	VENDOR SHEET NO.	REV	DATE	VENDOR DRAWING TITLE
3.3 (SHEET 5)	H_2 REACTANT STORAGE OV-105	R.I.	VS70-450205	ALL	A	8/28/89	SCHEMATIC DIAGRAM - CRYO SUBSYSTEM OV-105
3.3 (SHEETS 6-7)	PALLET H_2 REACTANT TANKS 6 & 7 (8 & 9)	R.I.	ECN 105-0044	ALL	A4	1/23/90	PRSD MODS FOR THE 28-DAY MISSION EXTENSION KIT ON OV-105
		R.I.	VS70-945102	ALL	G	7/20/90	INTEGRATED SYSTEM SCHEMATIC ORBITER OV-102 EPS
		JSC	SCR 90118	ALL	A	8/23/90	EDO SM MODIFICATIONS
3.4 (SHEET 1)	FUEL CELL	R.I.	VS70-945102	27	F/G07	8/2/90	FUEL CELL 1 REAR VALVES, FC GAS CONTROL, AND LIVE HEATERS
			VS70-945102	28	F/G07	8/2/90	FC 1 START-UP LOGIC AND FC HEATERS
			VS70-945102	29	F/G07	8/2/90	FC 1 INSTRUMENTATION
			VS70-945102	36	F/G07	8/2/90	FC GAS/$H_2$0 DISCHARGE SYSTEM AND HEATER CONTROL
			VS70-450119	1 of 7	B	6/14/89	FC CONTROL SUBSYSTEM
			VS70-450119	2	B	6/14/89	FC PURGE VALVES and HTRS
		R.I.	VS70-723319	6,7,16	C	7/11/88	TABULATED CONNECTOR INTERFACE
		R.I.	VS70-450205	2	B	4/3/91	SCHEMATIC DIAGRAM - CRYO SUBSYSTEM OV-105
3.4 SHEET 2	FUEL CELL TO PURGE AND CELL PERFORMANCE MONITOR	AEROSPACE AVIONICS INC.	501054	—	C	11/17/82	CELL PERFORMANCE MONITOR SCHEMATIC ANALOG SIGNAL-CHANNEL
		AEROSPACE AVIONICS INC.	50156	—	C	11/17/82	CELL PERFORMANCE MONITOR POWER SUPPLY SCHEMATIC
		NASA	SS-P-0002-580G	SECTION 6.9	G	10/1/86	SPACE SHUTTLE PROGRAM ORBITER PROJECT COMPUTER PROGRAM DEVELOPMENT SPECIFICATION (CPDS)
		NASA/IBM		3.2.1.18		4/2/82	SPACE SHUTTLE PROGRAM ORBITER AVIONICS SOFTWARE OPERATIONAL (OPS) DETAILED DESIGN SPECIFICATION (DDS)
3.5	EDO PALLET	R.I.	SSV90-7	ALL	-	3/19/90	EXTENDED DURATION ORBITER CRITICAL DESIGN REVIEW (PRELIMINARY DOCUMENT)
		R.I.	V458-454002	1	-	7/1/90	INSTALLATION, EDO-PALLET PRSD SUB-TIER
3.6B	EDO CRYO PALLET PLUMBING	R.I.	VL70-458800	1 of 5	-	11/91	FUEL CELL/POWER REACTANT STORAGE & DISTRIBUTION SYSTEM SCHEMATIC OV-102 (STS-50) VERSION (PRELIMINARY DOCUMENT)

DWG	SIGNATURE	DATE	DWG	SIGNATURE	DATE
3.3-5	ENGR S. HIRSHORN		3.5	ENGR L. FOX	
	ENGR [signature]	2/17/93		ENGR [signature]	2-17-93
3.3-6	ENGR L. MINTER		3.6B	ENGR L. FOX	
	ENGR [signature]	2/17/93		ENGR [signature]	2-17-93
3.3-7	ENGR R. ALYOUB			APP [signature]	2-18-93
	ENGR [signature]	2/18/93		APP	
3.4-1,2	ENGR B. PAWLIK			OMNIPLAN	
	ENGR [signature]	2/19/93		LTR E PCN 2	

NATIONAL AERONAUTICS AND SPACE ADMINISTRATION
LYNDON B. JOHNSON SPACE CENTER HOUSTON, TEXAS

VENDOR DRAWING REFERENCES

SPACE SHUTTLE | TBL NO 3-I
ALL | PAGE 3.1-2 | SHEET 2 OF 2

BASIC REV E-2

DATE: 10/12/90	NAME: SEV	VERSION: BPT, 8
DATE: 10/23/90	NAME: BJT	VERSION: INK, 6
DATE: 11/01/90	NAME: SEV	VERSION: INK, 7

FLOOD ELECTRONICS PKG
INTENSITY CONTROL
MID DECK FLOOD 1
16.5W FLUORESCENT

D/EMERGENCY ELECTRONICS
INTENSITY CONTROL
MID DECK FLOOD 8
16.5W FLUORESCENT

LOOD ELECTRONICS PKG
INTENSITY CONTROL
MID DECK FLOOD 2
16.5W FLUORESCENT

D/EMERGENCY ELECTRONICS
INTENSITY CONTROL
MID DECK FLOOD 6
16.5W FLUORESCENT

LOOD ELECTRONICS PKG
INTENSITY CONTROL
MID DECK FLOOD 5
16.5W FLUORESCENT

OOD/EMERGENCY ELECTRONICS
INTENSITY CONTROL
MID DECK FLOOD 7
16.5W FLUORESCENT

LOOD ELECTRONICS PKG
INTENSITY CONTROL
MID DECK FLOOD 3
16.5W FLUORESCENT

LOOD ELECTRONICS PKG
INTENSITY CONTROL
MID DECK FLOOD 4
16.5W FLUORESCENT

HYGIENE STATION FLOOD
ON THE GALLEY)
CW
BRT
ELECTRONICS PACKAGE AND DIMMING CONTROL
16.5W 1 LAMP FLUORESCENT
(80V73A1112)

NOTE:
GALLEY IS MISSION DEPENDENT.

MN A
FLOODS
WMC/MO13Q
3A
PNL ML86B+F CB32

MASTE MANAGEMENT COMPARTMENT FLOOD
ON
OFF
PNL ML18F S2

MID DECK FLOODS
MO13Q LTG
ON
OFF
PNL MO13Q S9

WMC FLOOD ELECTRONICS
INTENSITY CONTROL
WMC FLOOD
16.5W FLUORESCENT

MO13Q PNL LT NO 2 ELECTRONICS
INTENSITY CONTROL
MO13Q PNL LT NO 2
6.6W FLUORESCENT

MO13Q PNL LT NO 1 ELECTRONICS
INTENSITY CONTROL
MO13Q PNL LT NO 1
6.6W FLUORESCENT

MN B
FLOODS BUNK 2/4
3A
ML86B+F CB40

BUNK 4 (END)
OFF CW BRT OFF BRT
ELECTRONICS AND DIMMING CONTROL
16.5W 1 LAMP FLUORESCENT

BUNK 2 (MIDDLE)
OFF CW BRT OFF BRT
ELECTRONICS AND DIMMING CONTROL
16.5W 1 LAMP FLUORESCENT

NOTE:
BUNK LIGHTS LOCATED AT HEAD OF BUNKS IN SLEEP STATION. BUNKS ARE MISSION DEPENDENT.

MN C
FLOODS BUNK 1/3
3A
ML86B+F CB46

BUNK 3 (TOP)
OFF CW BRT OFF BRT
ELECTRONICS AND DIMMING CONTROL
16.5W 1 LAMP FLUORESCENT

BUNK 1 (BOTTOM)
OFF CW BRT OFF BRT
ELECTRONICS AND DIMMING CONTROL
16.5W 1 LAMP FLUORESCENT

MN C
FLOOD TUNNEL ADAPTER 4
3A
ML86B CB80

MN B
FLOOD TUNNEL ADAPTER 3
3A
ML86B CB79

MN A
FLOOD TUNNEL ADAPTER 2
3A
ML86B CB78

ESS 1 BC
FLOOD TUNNEL ADAPTER 1
3A
ML86B CB77

TUNNEL ADAPTER 1
ON/OFF
OFF/ON
MO13Q S14

MN A
FLOODS AIRLOCK 1
3A
PNL ML86B+F CB48

MN B
FLOODS AIRLOCK 3
3A
PNL ML86B+F CB42

MN C
FLOODS AIRLOCK 4
3A
PNL ML86B+F CB59

ESS 1 BC
FLOOD AIRLOCK 2
3A
PNL ML86B+G CB36

MID DECK FLOODS
AIRLOCK 2
ON/OFF
OFF/ON
PNL MO13Q S10

LIGHTING
FLOOD
4 ON OFF TVS8T S4
3 ON OFF TVS8T S3
2 ON OFF TVS8T S2
1 ON/OFF OFF/ON TVS8T S1
TUNNEL ADAPTER 3

ELECTRONICS PACKAGE
16.5W FLUORESCENT
TUNNEL ADAPTER FLOODLIGHT NO 4
TUNNEL ADAPTER FLOODLIGHT NO 3
TUNNEL ADAPTER FLOODLIGHT NO 2
TUNNEL ADAPTER FLOODLIGHT NO 1

LIGHTING
FLOOD
1 ON OFF
PNL AV18A S1
3 ON OFF
PNL AV18A S3
4 ON OFF
PNL AV18A S4
2 ON/OFF OFF/ON
PNL AV18A S2
AIRLOCK

AIRLOCK FLOOD 1 ELECTRONICS PKG
INTENSITY CONTROL
AIRLOCK MODULE LT NO 1
16.5W FLUORESCENT

AIRLOCK FLOOD 3 ELECTRONICS PKG
INTENSITY CONTROL
AIRLOCK MODULE LT NO 3
16.5W FLUORESCENT

AIRLOCK FLOOD 4 ELECTRONICS PKG
INTENSITY CONTROL
AIRLOCK MODULE LT NO 4
16.5W FLUORESCENT

AIRLOCK FLOOD 2 ELECTRONICS PKG
INTENSITY CONTROL
AIRLOCK MODULE LT NO 2
16.5W FLUORESCENT

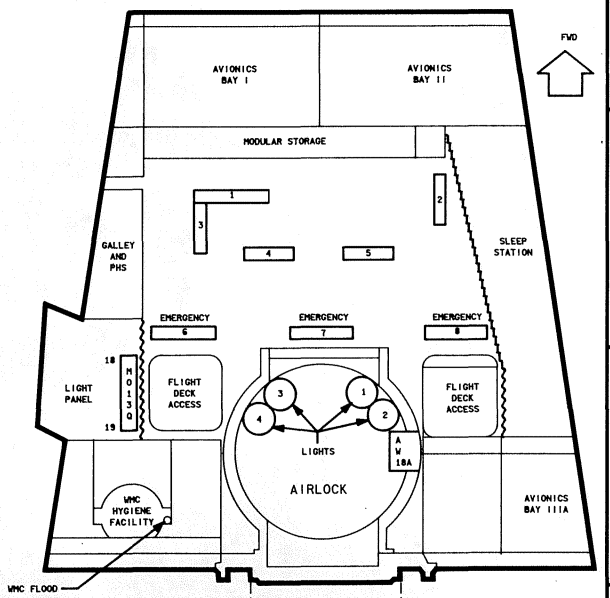

TUNNEL ADAPTER

MID DECK AND AIRLOCK STATIONS

3. SEE TABLE 4-II FOR DRAWING REFERENCES

SPACELAB FLIGHTS ONLY. SEE SPACELAB SYSTEM HANDBOOK DWG 2.8 FOR DETAILS OF SPACELAB TUNNEL LIGHTING.

NOTES: CONTROLS MOUNTED ON LIGHT FIXTURE

1 INT LTG

SIGNATURE		DATE	NATIONAL AERONAUTICS AND SPACE ADMINISTRATION LYNDON B. JOHNSON SPACE CENTER HOUSTON, TEXAS
DSGN	MELVIN J JAMES	3-18-79	
DR	MELVIN J JAMES	4-03-79	INTERIOR FLOOD LIGHTING
ENGR	R. FLOYD		
ENGR		10/30/90	
APP		10/30/90	
APP			SPACE SHUTTLE / DWG NO 4.1
OMNIPLAN	S.K. Kimball	11-7-90	ALL
LTR E	MCH		126.5 X 34 / PAGE / SHEET 1 OF 1

BASIC REV E

S R Q P O N M L K J I

ESS 1BC
FLOOD LEFT GLRSHLD
3A
PNL R15+F CB59
LIGHTING LEFT GLARESHIELD FLOOD
BRIGHT
DIM
OFF
PNL O6 S1
V_{ESS1BC} 013&R15
GLARESHIELD LEFT ELECTRONICS PKG
OSC
INTENSITY CONTROL
FLUORESCENT
16.5W F2A2
16.5W F3A1
V_{ESS3AB} RTN
V_{ESS1BC} RTN
LIGHTING LEFT GLARESHIELD FLOOD
DIM BRT
PNL O6 R1

ESS 2CA
FLOOD RIGHT GLRSHLD
3A
PNL R15+F CB61
LIGHTING RIGHT GLARESHIELD FLOOD
BRIGHT
DIM
OFF
PNL O8 S2
V_{ESS2CA} 013&R15
GLARESHIELD RIGHT ELECTRONICS PKG
OSC
INTENSITY CONTROL
FLUORESCENT
16.5W F4A2
16.5W F3A2
V_{ESS3AB} RTN
V_{ESS2CA} RTN
LIGHTING RIGHT GLARESHIELD FLOOD
DIM BRT
PNL O8 R1

MN B
OS FLOOD
3A
PNL R15+E CB54
ORBIT STATION LIGHTING FLOOD
ON
OFF
PNL A6A1 S32
V_{MNB} R15
OS FLOOD ELECTRONICS PKG
OSC
INTENSITY CONTROL
19W FLUORESCENT
V_{ESS3AB} RTN
V_{MNB} RTN
ORBIT LIGHTING STATION FLOOD
DIM BRT
PNL A6A1 R1

ON-ORBIT STATION FLOODLIGHT
PS FLOODLIGHT
AFT STATIONS

SEAT/CENTER CONSOLE FLOODLIGHTS
PLT RIGHT SIDE CONSOLE FLOODLIGHTS
CDR LEFT SIDE CONSOLE FLOODLIGHTS
LEFT AND RIGHT GLARESHIELD FLOODLIGHTS
FORWARD STATIONS

MN C
MS FLOOD
3A
PNL R15+E CB58
MS LIGHTING FLOOD
ON
OFF
PNL R10A2 S12
MS FLOOD ELECTRONICS PKG
OSC
INTENSITY CONTROL
MS FLOOD
33W FLUORESCENT
MS LIGHTING FLOOD
DIM BRT
PNL R10A2 R3

MN A
FLOODS MID DECK 1/8
3A
PNL ML868+F CB34
V_{MNA} ML868
MID DECK FLOODS
1 ON
8 ON
OFF
PNL M013Q S1 S8
MN B
FLOODS MID DECK 2/6
3A
PNL ML868+F CB39
V_{MNB} ML868
2 ON
6 ON
OFF
PNL M013Q S2 S6
MN C
FLOODS MIDDECK 5/7
3A
PNL ML868+F CB44
V_{MNC} ML868
5 ON
7 ON
OFF
PNL M013Q S5 S7
MN C
FLOODS MIDDECK 3/4 M013Q
3A
PNL ML868+F CB45
3 ON
4 ON
OFF
PNL M013Q S3 S4

MID DECK 1 FLOOD ELECTRONICS PKG
OSC
INTENSITY CONTROL
V_{MNA} RTN
MID DECK FLOOD 1
16.5W FLUORESCENT
MN A FLOODS MDCK M013Q 3A PNL ML868+F
V_{MNA} ML868

MID DECK 8 FLOOD/EMERGENCY ELECTRONICS PKG
OSC
INTENSITY CONTROL
V_{MNA} RTN
V_{ESS3AB} RTN
MID DECK FLOOD 8
16.5W FLUORESCENT

MID DECK 2 FLOOD ELECTRONICS PKG
OSC
INTENSITY CONTROL
V_{MNB} RTN
MID DECK FLOOD 2
16.5W FLUORESCENT

MID DECK 6 FLOOD/EMERGENCY ELECTRONICS PKG
OSC
INTENSITY CONTROL
V_{MNB} RTN
V_{ESS3AB} RTN
MID DECK FLOOD 6
16.5W FLUORESCENT

MID DECK 5 FLOOD ELECTRONICS PKG
OSC
INTENSITY CONTROL
V_{MNC} RTN
MID DECK FLOOD 5
16.5W FLUORESCENT

MID DECK 7 FLOOD/EMERGENCY ELECTRONICS PKG
OSC
INTENSITY CONTROL
V_{MNC} RTN
V_{ESS3AB} RTN
MID DECK FLOOD 7
16.5W FLUORESCENT

MID DECK 3 FLOOD ELECTRONICS PKG
OSC
INTENSITY CONTROL
V_{MNC} RTN
MID DECK FLOOD 3
16.5W FLUORESCENT

MID DECK 4 FLOOD ELECTRONICS PKG
OSC
INTENSITY CONTROL
V_{MNC} RTN
MID DECK FLOOD 4
16.5W FLUORESCENT

MN A FLOODS MDCK M013Q 3A PNL ML868+F
V_{MNA} ML868
V_{MNB} ML868
V_{MNC} ML868

V_{ESS3AB} FD
1.2K 2W
EMERGENCY LIGHTING ON/OFF OFF/ON PNL C3A5 S15
EMERGENCY LIGHTING ON/OFF OFF/ON PNL ML10F S1
RPC 7.5A
V_{ESS3AB} FPALC3

MN B FLOODS PHS 3A PNL ML868+F CB41
V_{MNB} ML868
PERSONAL HYGIENE STATION FLOOD (LOCATED ON THE GALLEY)
OFF CW BRT OFF BRT
ELECTRONICS PACKAGE AND DIMMING CONTROL
16.5W 1 LAMP FLUORESCENT
(80V73A112)
NOTE: GALLEY IS MISSION DEPENDENT.

FLIGHT DECK MID DECK

DATE: 11/01/90 | NAME: SEV | VERSION: INK 7

W V U T S R Q P O N

8 7 6 5 4 3 2 1

V_{MNA} 014 — MN A — FLOOD LEFT CNSL — 3A — PNL 014 C — CB11

OVERHEAD LEFT ELECTRONICS PKG PANEL

OSC — INTENSITY CONTROL — 16.5W FLUORESCENT

LIGHT ASSY — OH CDR — LEFT CNSL FLOOD — OFF — BRT — OFF — BRT

V_{MNB} 015 — MN B — FLOOD LEFT CTR — 3A — PNL 015 C — CB11

LEFT SEAT/CENTER CONSOLE FLOOD

LEFT SEAT/ CTR CNSL FLOOD — DIMMING CONTROL ELECTRONICS — DIM — BRT — PNL 06A1 — R7

SEAT — OFF — CTR CNSL — PNL 06A1 — S6

CTR CNSL — 22V — RTN

LEFT SEAT — 22V

V_{MNC} 016 — MN C — FLOOD RIGHT CTR — 3A — PNL 016 C — CB10

RIGHT SEAT/CENTER CONSOLE FLOOD

RIGHT SEAT/ CTR CNSL FLOOD — DIMMING CONTROL ELECTRONICS — DIM — BRT — PNL 08A1 — R6

SEAT — OFF — CTR CNSL — PNL 08A1 — S1

CTR CNSL — 22V — RTN

RIGHT SEAT — 22V

V_{MNB} 015 — MN B — FLOOD RIGHT CNSL — 3A — PNL 015 C — CB10

OVERHEAD RIGHT ELECTRONICS PACKAGE PANEL

OSC — INTENSITY CONTROL — 16.5W FLUORESCENT

LIGHT ASSY — OH PLT RIGHT CNSL FLOOD — OFF — BRT — OFF — BRT

V_{MNA} R15 — MN A — PS FLOOD — 3A — PNL R15 E — CB50

PS FLOOD — ON — OFF — PNL L9A2 — S11

PS FLOOD ELECTRONICS PKG

OSC — INTENSITY CONTROL — PS FLOOD — 33W FLUORESCENT

PS FLOOD — DIM — BRT — PNL L9A2 — R3

V_{ESS1BC} 013AR15 — ESS 1BC — FLOOD LEFT GLRSHLD — 3A — PNL R15 F — CB59

LIGHTING LEFT GLARESHIELD FLOOD — BRIGHT — VAR — OFF — PNL 06 — S1

V_{ESS3AB} RTN

V_{ESS1BC} RTN

GLARESHIELD LEFT ELECTRONICS PKG

OSC — INTENSITY CONTROL — FLUORESCENT — 16.5W F2A2 — 16.5W F3A1

LIGHTING LEFT GLARESHIELD FLOOD — DIM — BRT — PNL 06 — R1

V_{ESS2CA} 013AR15 — ESS 2CA — FLOOD RIGHT GLRSHLD — 3A — PNL R15 F — CB61

LIGHTING RIGHT GLARESHIELD FLOOD — BRIGHT — VAR — OFF — PNL 08 — S3

V_{ESS3AB} RTN

V_{ESS2CA} RTN

GLARESHIELD RIGHT ELECTRONICS PKG

OSC — INTENSITY CONTROL — FLUORESCENT — 16.5W F4A2 — 16.5W F3A2

LIGHTING RIGHT GLARESHIELD FLOOD — DIM — BRT — PNL 08 — R1

V_{MNB} R15 — MN B — OS FLOOD — 3A — PNL R15 E — CB54

ORBIT STATION LIGHTING FLOOD — ON — OFF — PNL A6A1 — S32

V_{ESS3AB} RTN

V_{MNB} RTN

OS FLOOD ELECTRONICS PKG

OSC — INTENSITY CONTROL — 19W FLUORESCENT

ORBIT LIGHTING STATION FLOOD — DIM — BRT — PNL A6A1 — R1

ON-ORBIT STATION FLOODLIGHT

MS FLOODLIGHT — PS FLOODLIGHT

AFT STATIONS

SEAT/CENTER CONSOLE FLOODLIGHTS

PLT RIGHT SIDE CONSOLE FLOODLIGHTS

LEFT AND RIGHT GLARESHIELD FLOODLIGHTS

CDR LEFT SIDE CONSOLE FLOODLIGHTS

FORWARD STATIONS

V_{MNC} R15 — MN C — MS FLOOD — 3A — PNL R15 E — CB58

MS LIGHTING FLOOD — ON — OFF — PNL R10A2 — S12

MS FLOOD ELECTRONICS PKG

OSC — INTENSITY CONTROL — MS FLOOD — 33W FLUORESCENT

MS LIGHTING FLOOD — DIM — BRT — PNL R10A2 — R3

V_{ESS3AB} FD — 1.2K 2W — EMERGENCY LIGHTING — ON/OFF — OFF/ON — PNL C3A5 — S15

EMERGEN LIGHTIN — ON/OFF — OFF/ON — PNL ML18F

FLIGHT DECK | MID DECK

BASIC REV E

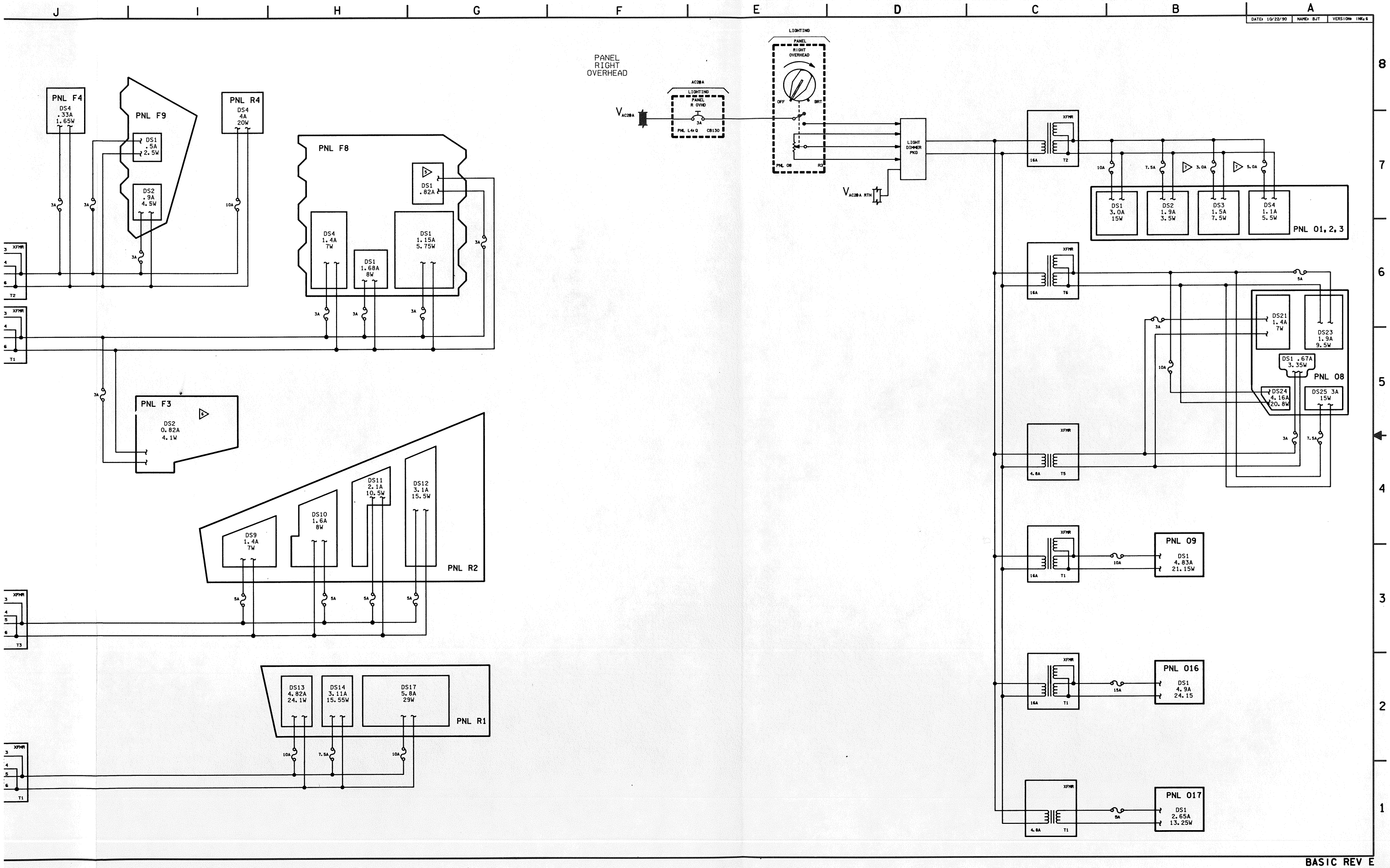

PANEL RIGHT OVERHEAD
PNL F4
DS4 .33A 1.65W
PNL F9
DS1 .5A 2.5W
DS2 .9A 4.5W
PNL R4
DS4 4A 20W
PNL F8
DS1 .82A
DS4 1.4A 7W
DS1 1.68A 8W
DS1 1.15A 5.75W
PNL F3
DS2 0.82A 4.1W
DS9 1.4A 7W
DS10 1.6A 8W
DS11 2.1A 10.5W
DS12 3.1A 15.5W
PNL R2
DS13 4.82A 24.1W
DS14 3.11A 15.55W
DS17 5.8A 29W
PNL R1
LIGHTING
PANEL RIGHT OVERHEAD
OFF
BRT
LIGHT DIMMER PKG
DS1 3.0A 15W
DS2 1.9A 3.5W
DS3 1.5A 7.5W
DS4 1.1A 5.5W
PNL 01, 2, 3
DS21 1.4A 7W
DS23 1.9A 9.5W
DS1 .67A 3.35W
PNL 08
DS24 4.16A 20.8W
DS25 3A 15W
PNL 09
DS1 4.83A 21.15W
PNL 016
DS1 4.9A 24.15
PNL 017
DS1 2.65A 13.25W

BASIC REV E

S R Q P O N M L K J I

PANEL
LEFT/CENTER

PANEL
RIGHT

V_{AC10A}
AC10A
LIGHTING
PNL L/CTR
3A
PNL L4 Q CB101
LIGHTING
PANEL
LEFT/CENTER
OFF BRT
PNL O6 R3
$V_{AC10A\ RTN}$
LIGHT DIMMER PKG

PNL F2
DS4 .33A 1.65W
PNL F6
DS1 1.7A 8.5W
DS4 1.76A 8.8W
DS1 .8A
DS2 1.2A 6W
PNL F3
DS1 0.8A 4.0W
XFMR 16A T1

XFMR 4.8A T2
PNL L4
DS1 3.3A 16.5W
DS2 4.6A 23W
DS3 3.8A 19W
7.5A
10A

XFMR 16A T1
XFMR 16A T3
PNL L1
DS5 5.4A 27W
DS6 6.8A 34W
DS2 6W 1.2A
DS3 6A 3W
5A

XFMR 16A T2
PNL L2
DS14 4.4A 22W
DS13 2.1A 10.5W
DS12 1.3A 6.5W
5A
3A

XFMR 4.8A T1
XFMR 4.8A T4
PNL C2
DS1 3.2A 16W

XFMR 16A T1
PNL F7
DS2 .5A 2.5W
DS4 .6A 3W
DS3 .35A 1.75W
DS5 .6A 3W
7.5A

XFMR 16A T1
PNL C3
C3A1 DS1 2.2A 11W
C3 A1 DS2 2.7A 13.5W
C3A7 DS1 2.6A 13W
C3A6 DS1 2.6A 13W
C3A5 DS4 2.1A 10.5W
C3A5 DS5 1.82A 8.1W
5A
7.5A

XFMR 16A T1

V_{AC20B}
AC20B
LIGHTING
PANEL
R
3A
PNL L4 Q CB104
LIGHTING
PANEL
RIGHT
OFF BRT
PNL O8 R2
$V_{AC20B\ RTN}$
LIGHT DIMMER PKG

PNL F4
DS4 .33A 1.65W
PNL F9
DS1 .5A 2.5W
DS2 .9A 4.5W
PNL F3
DS2 0.82A 4.1W
3A
10A

XFMR 16A T2
XFMR 16A T1
XFMR 16A T3
XFMR 16A T1

DATE: 8/11/87	NAME: MDU	VERSION: INK: 5
DATE: 10/12/90	NAME: SEW	VERSION: BPT: 1
DATE: 10/22/90	NAME: BJT	VERSION: INK: 6

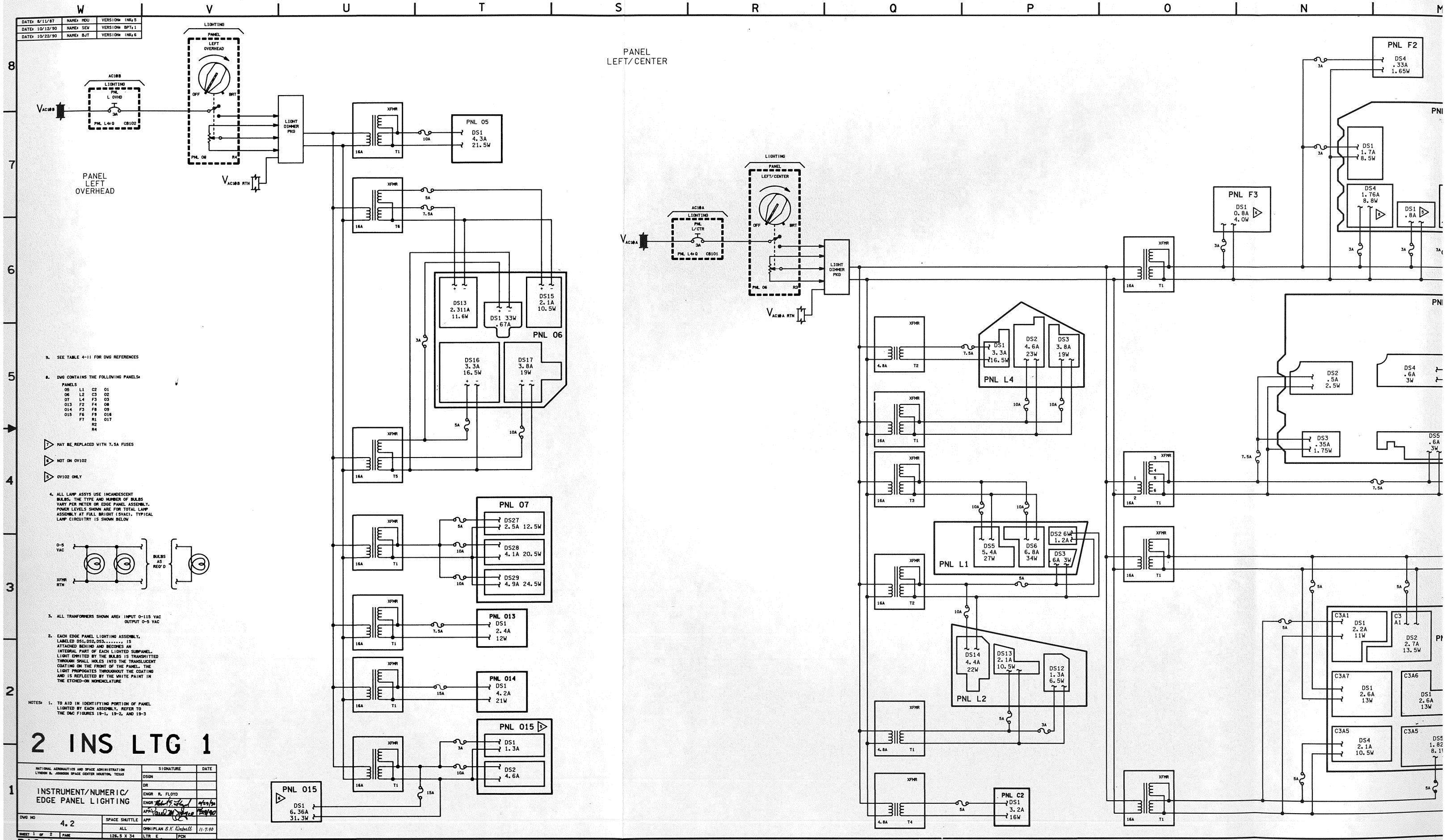

9. SEE TABLE 4-11 FOR DWG REFERENCES

8. DWG CONTAINS THE FOLLOWING PANELS:

PANELS			
05	L1	C2	01
06	L2	C3	02
07	L4	F3	03
013	F2	F4	08
014	F3	F8	09
015	F6	F9	016
	F7	R1	017
		R2	
		R4	

7. MAY BE REPLACED WITH 7.5A FUSES

6. NOT ON OV102

5. OV102 ONLY

4. ALL LAMP ASSYS USE INCANDESCENT BULBS, THE TYPE AND NUMBER OF BULBS VARY PER METER OR EDGE PANEL ASSEMBLY. POWER LEVELS SHOWN ARE FOR TOTAL LAMP ASSEMBLY AT FULL BRIGHT (5VAC). TYPICAL LAMP CIRCUITRY IS SHOWN BELOW

3. ALL TRANFORMERS SHOWN ARE: INPUT 0-115 VAC
OUTPUT 0-5 VAC

2. EACH EDGE PANEL LIGHTING ASSEMBLY, LABELED DS1, DS2, DS3....., IS ATTACHED BEHIND AND BECOMES AN INTEGRAL PART OF EACH LIGHTED SUBPANEL. LIGHT EMMITED BY THE BULBS IS TRANSMITTED THROUGH SMALL HOLES INTO THE TRANSLUCENT COATING ON THE FRONT OF THE PANEL. THE LIGHT PROPOGATES THROUGHOUT THE COATING AND IS REFLECTED BY THE WHITE PAINT IN THE ETCHED-ON NOMENCLATURE

NOTES: 1. TO AID IN IDENTIFYING PORTION OF PANEL LIGHTED BY EACH ASSEMBLY, REFER TO THE D&C FIGURES 19-1, 19-2, AND 19-3

2 INS LTG 1

NATIONAL AERONAUTICS AND SPACE ADMINISTRATION LYNDON B. JOHNSON SPACE CENTER HOUSTON, TEXAS		SIGNATURE	DATE
		DSGN	
INSTRUMENT/NUMERIC/ EDGE PANEL LIGHTING		DR	
		ENGR R. FLOYD	
		ENGR [signature]	10/29/90
		APP [signature]	10/29/90
DWG NO 4.2	SPACE SHUTTLE	APP	
	ALL	OMNIPLAN S.K. Kimball	11-7-90
SHEET 1 OF 2 PAGE	126.5 X 34	LTR E	PCN

BASIC REV E

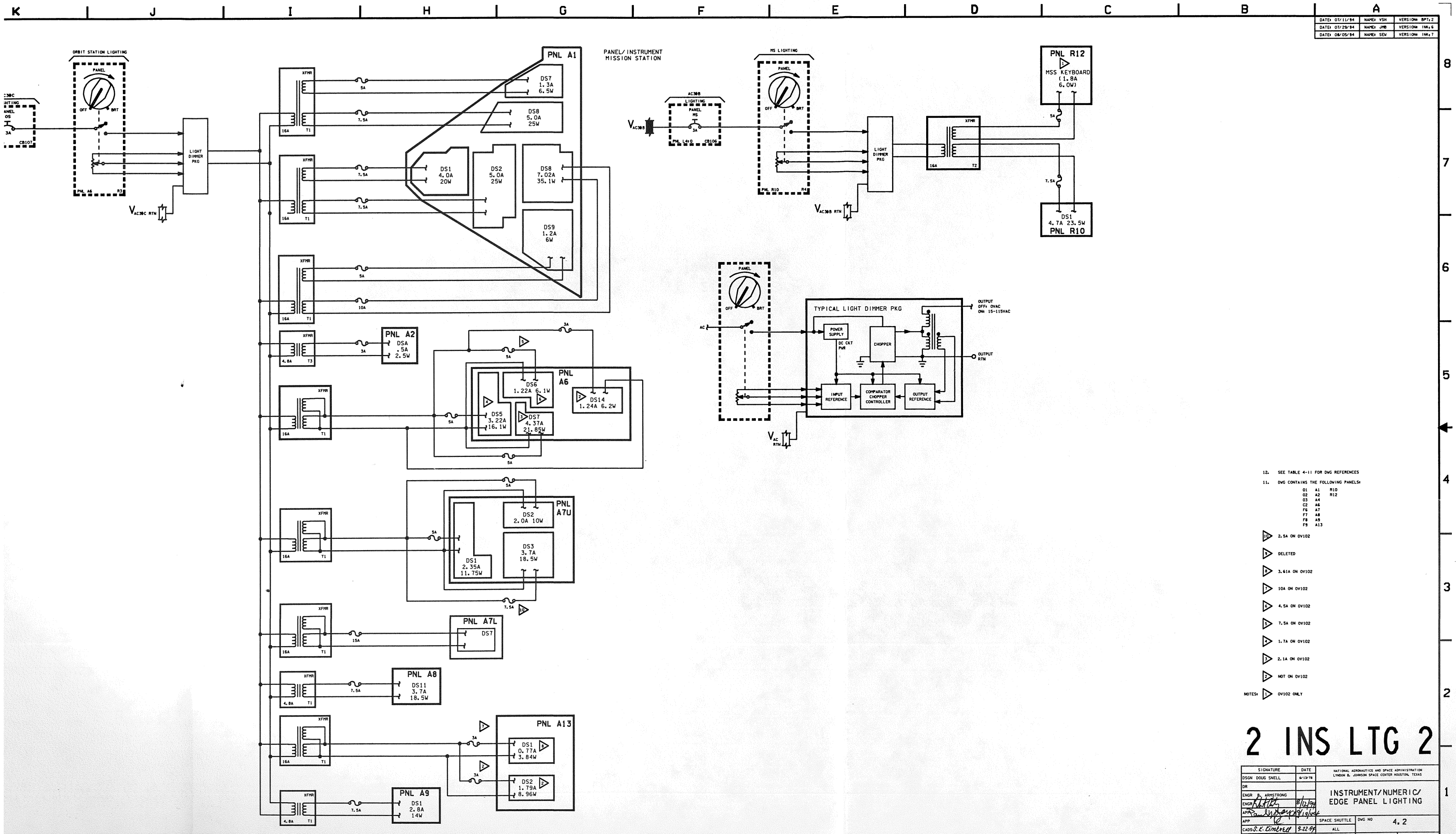

DATE: 07/11/94	NAME: VSH	VERSION: BPT:2
DATE: 07/29/94	NAME: JMB	VERSION: INK:6
DATE: 08/05/94	NAME: SEW	VERSION: INK:7

12. SEE TABLE 4-11 FOR DWG REFERENCES

11. DWG CONTAINS THE FOLLOWING PANELS:

O1	A1	R10
O2	A2	R12
O3	A4	
C2	A6	
F6	A7	
F7	A8	
F8	A9	
F9	A13	

10. 2.5A ON OV102
9. DELETED
8. 3.61A ON OV102
7. 10A ON OV102
6. 4.5A ON OV102
5. 7.5A ON OV102
4. 1.7A ON OV102
3. 2.1A ON OV102
2. NOT ON OV102

NOTES: 1. OV102 ONLY

2 INS LTG 2

SIGNATURE	DATE	NATIONAL AERONAUTICS AND SPACE ADMINISTRATION LYNDON B. JOHNSON SPACE CENTER HOUSTON, TEXAS
DSGN DOUG SNELL	6/13/78	
DR		INSTRUMENT/NUMERIC/ EDGE PANEL LIGHTING
ENGR B. ARMSTRONG		
ENGR [signature]	8/12/94	
APP [signature]	9/19/94	
APP		SPACE SHUTTLE — DWG NO 4.2
CADS S.K. Kimbrell	9-22-94	ALL
LTR E — PCN 4		126.5 X 34 — PAGE — SHEET 2 OF 2

BASIC REV E-4

T S R Q P O N M L K J

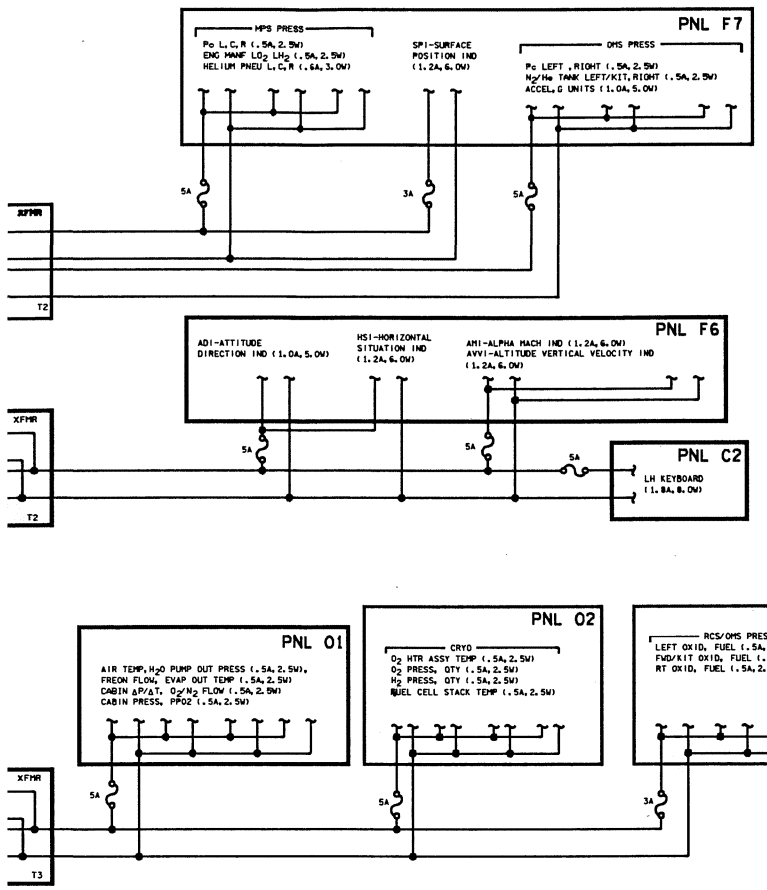

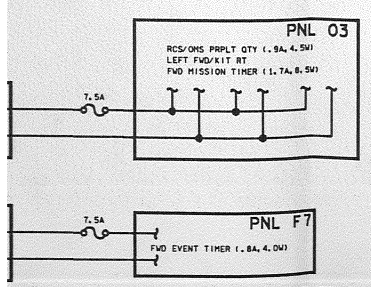

INSTRUMENT ORBIT STATION

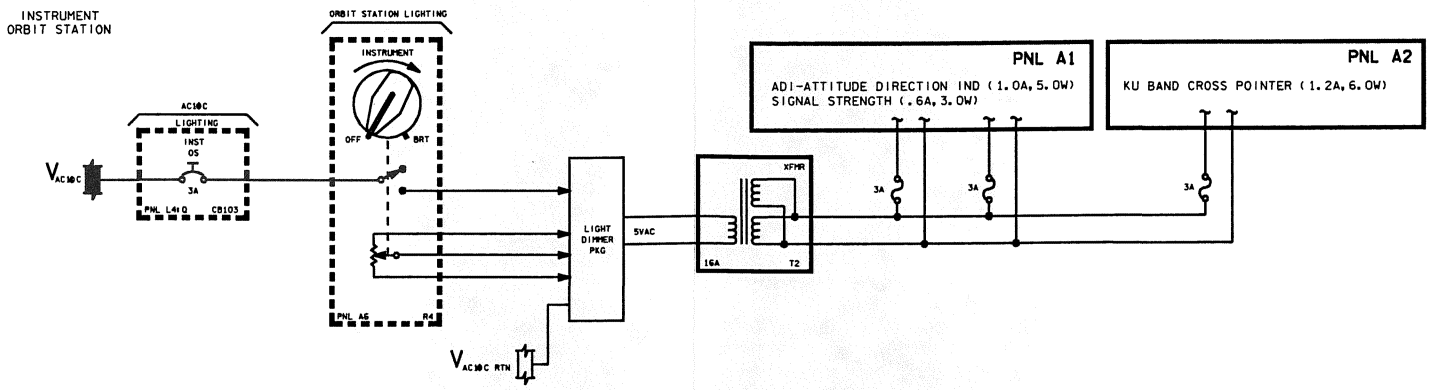

NUMERIC ORBIT STATION

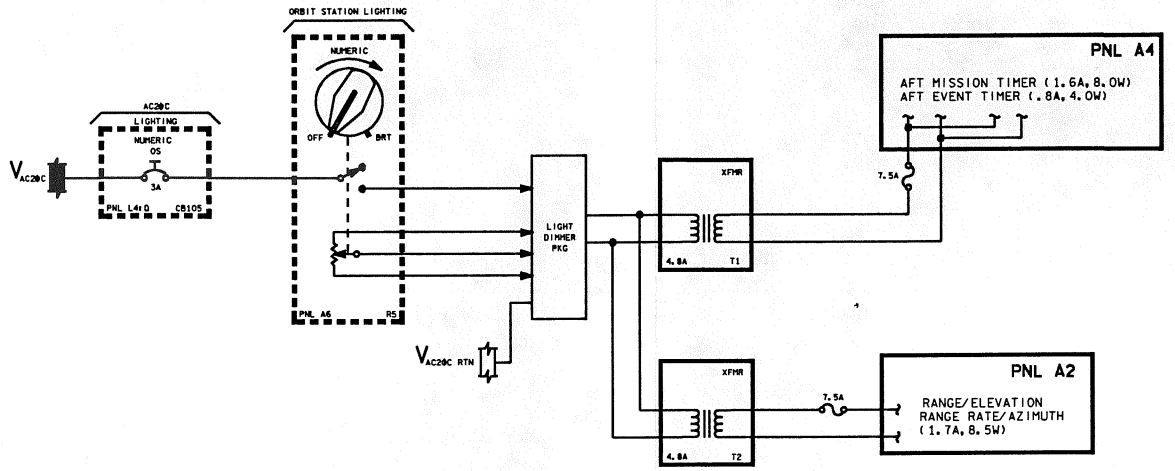

PANEL ORBIT STATION

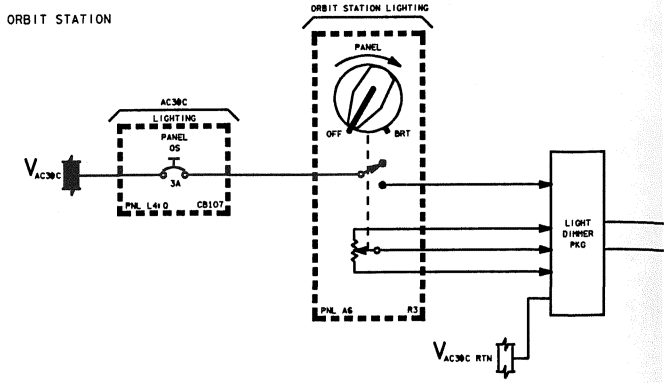

DATE: 08/05/94 | NAME: SEV | VERSION: INK 7

INSTRUMENT LEFT/CENTER

INSTRUMENT OVERHEAD

INSTRUMENT RIGHT

NUMERIC FWD

INSTRUMENT ORBIT STATION

NUMERIC ORBIT STATION

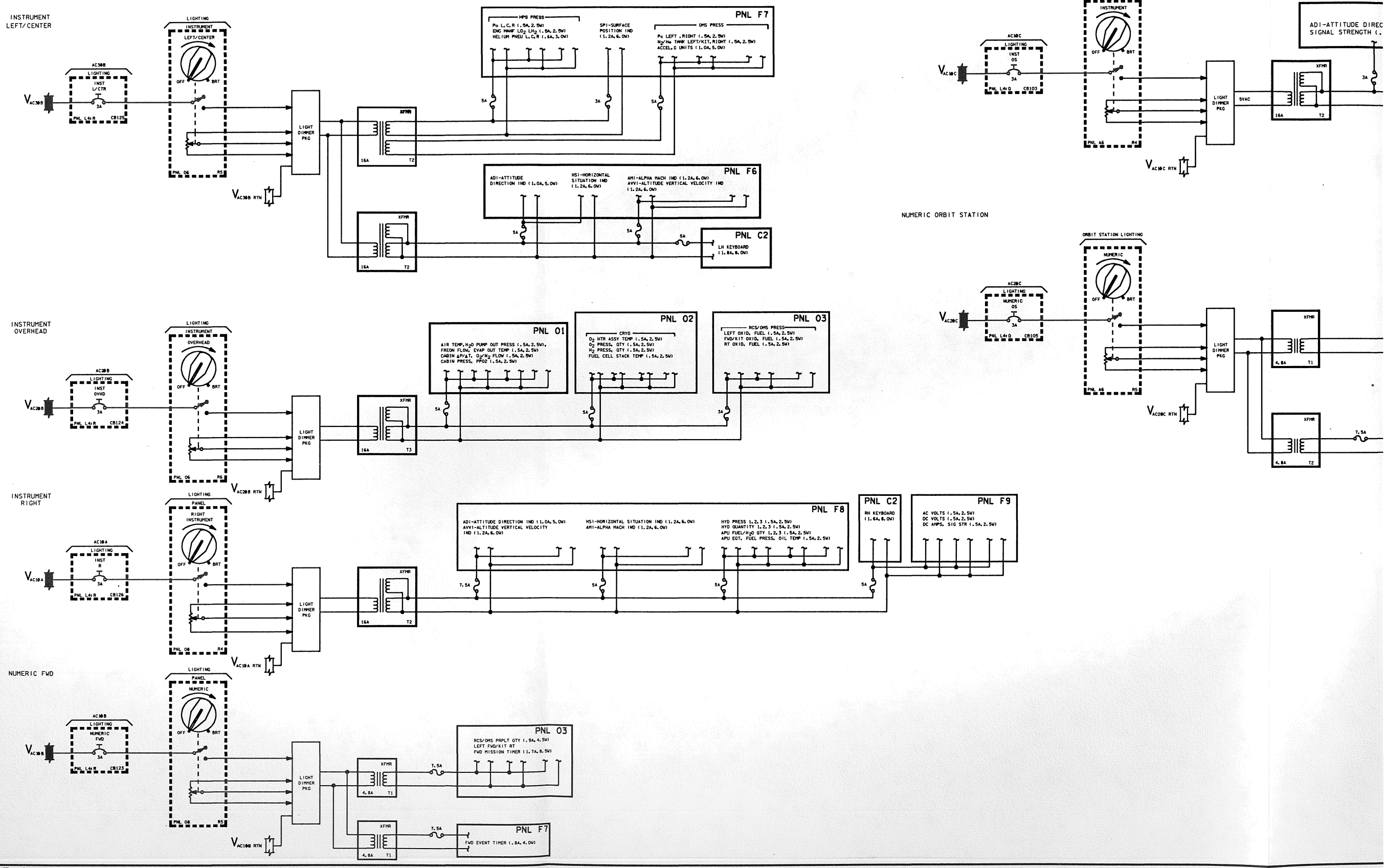

DATE> 09/20/90	NAME> SEM	VERSION> INK> 16
DATE> 09/26/90	NAME> MDU	VERSION> INK> 17
DATE> 10/16/90	NAME> BJT	VERSION> INK> 18

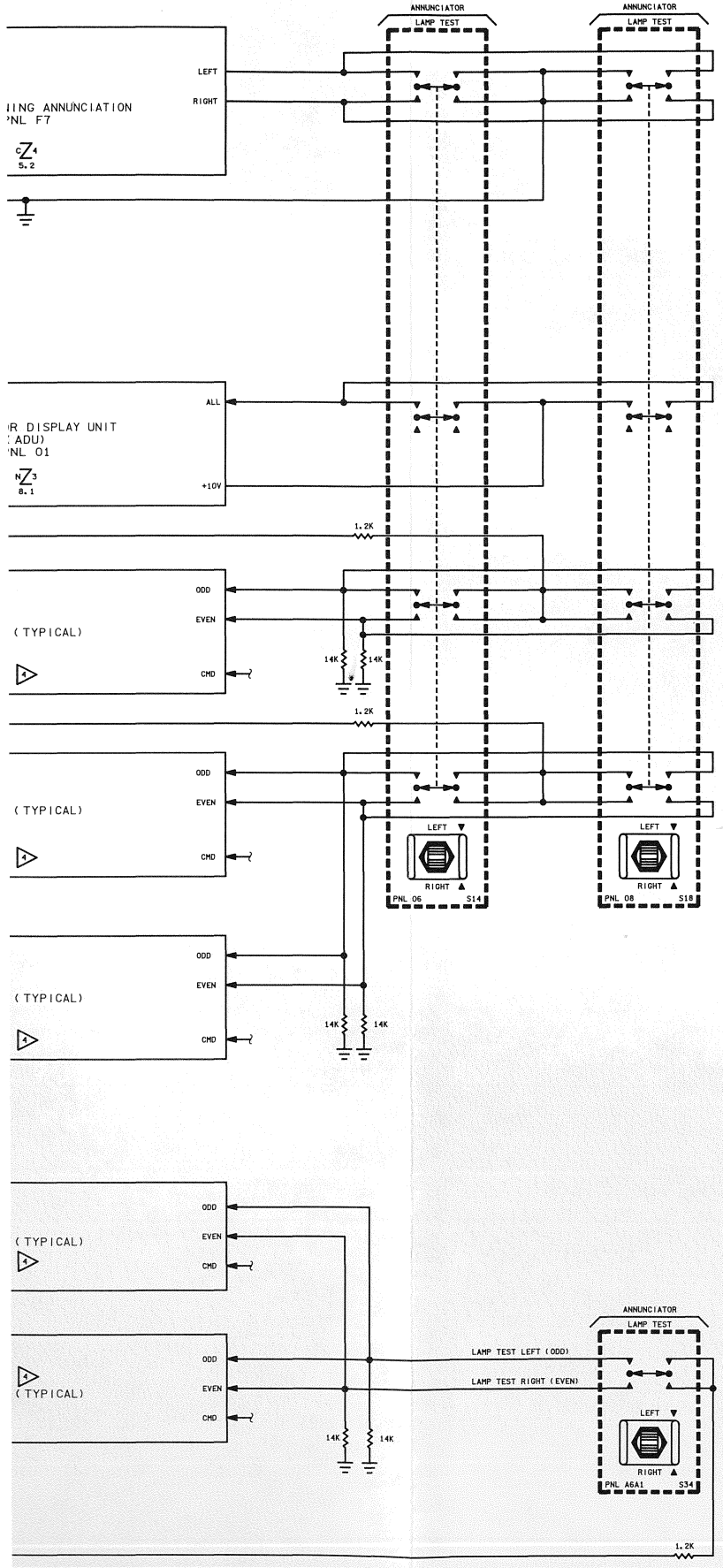

TYPICAL ANNUNCIATOR CONTROL ASSEMBLY

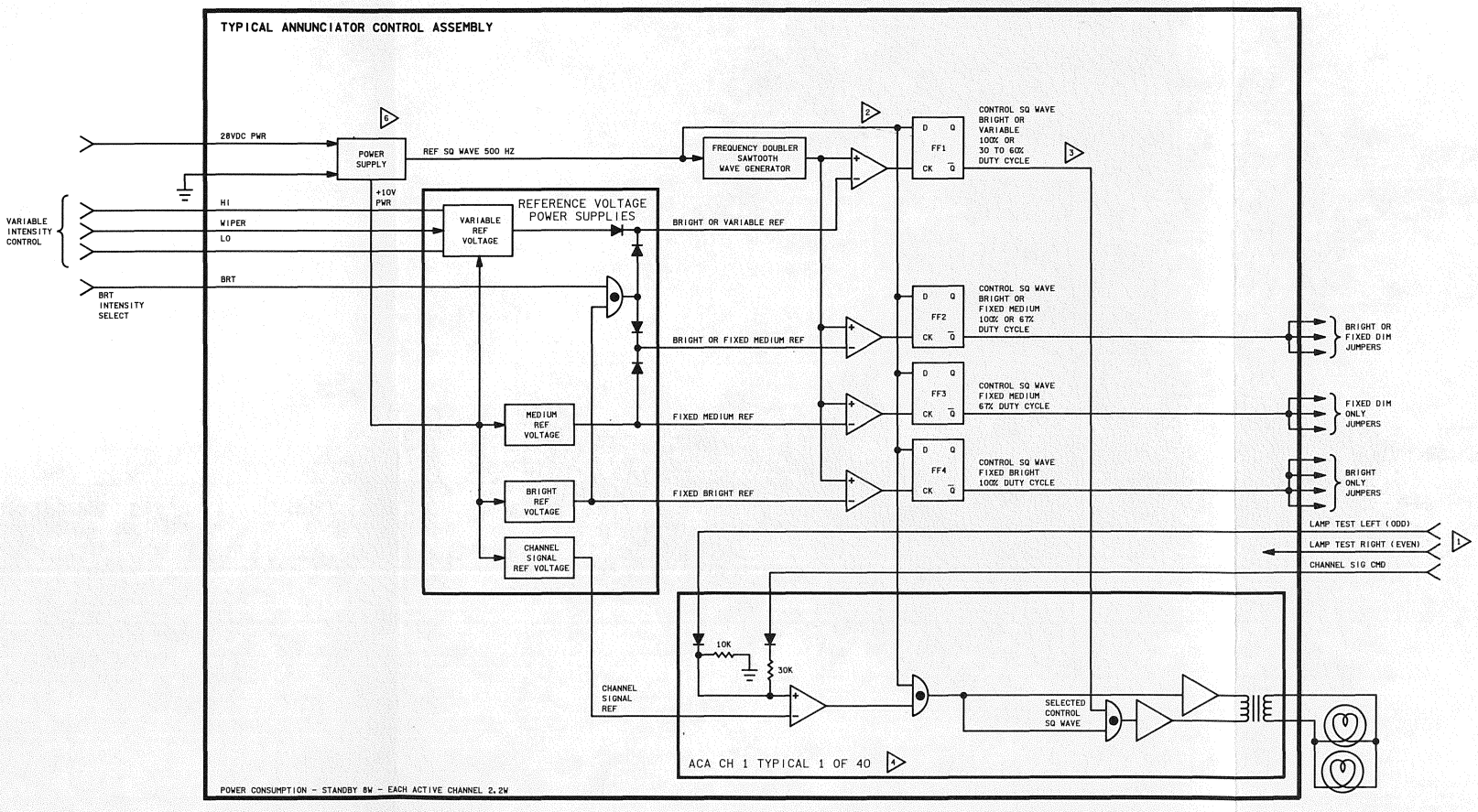

(D) POWER SUPPLY PROVIDES +20 VDC POWER AND +10 VDC LOGIC TO THE ACA

5. REFERENCE TABLE 4-II FOR DRAWING REFERENCES

(4) REFERENCE DWG 4-I FOR ACA ANNUNCIATION CHANNEL ASSIGNMENT

(3) LAMP BRIGHTNESS CONTROL CAPABILITY FOR AN ACA CHANNEL IS DETERMINED BY THE SELECTED CONTROL SQ WAVE. ALL CHANNELS 1 THROUGH 30 ARE SELECTED FOR BRIGHT OR VARIABLE (B OR V). CHANNELS 31 THROUGH 40 MAY BE SELECTED BY JUMPER FOR ANY ONE OF THE FOLOWING:
- BRIGHT AND FIXED MEDIUM (B AND M)
- FIXED BRIGHT ONLY (BO)
- FIXED MEDIUM ONLY (MO)
- OR BRIGHT OR VARIABLE (B OR V)

REFERENCE DWG 4-I FOR CHANNEL BRIGHTNESS CONTROL

(2) SIMPLIFIED FUNCTIONAL REPRESENTATION

NOTES> (1) LAMP TEST LEFT (ODD) POWERS ODD CHANNELS 1, 3, 5 — 39. LAMP TEST RIGHT (EVEN) POWERS EVEN CHANNELS 2, 4, 6 — 40 IN ACA

3 ANNUN

SIGNATURE	DATE	
DSGN S.K.KIMBRELL	4-23-79	NATIONAL AERONAUTICS AND SPACE ADMINISTRATION LYNDON B. JOHNSON SPACE CENTER HOUSTON, TEXAS
DR		
ENGR RAMI AL-AYOUBI		ANNUNCIATOR LIGHTING
ENGR Rami Al-Ayoubi	9/25/90	
APP Paul M. Joyce	9/25/90	
APP		SPACE SHUTTLE / DWG NO 4.3
OMNIPLAN S.K. Kimbrell	11-7-90	ALL
LTR E / PCN		82.5 X 34 / PAGE / SHEET 1 OF 1

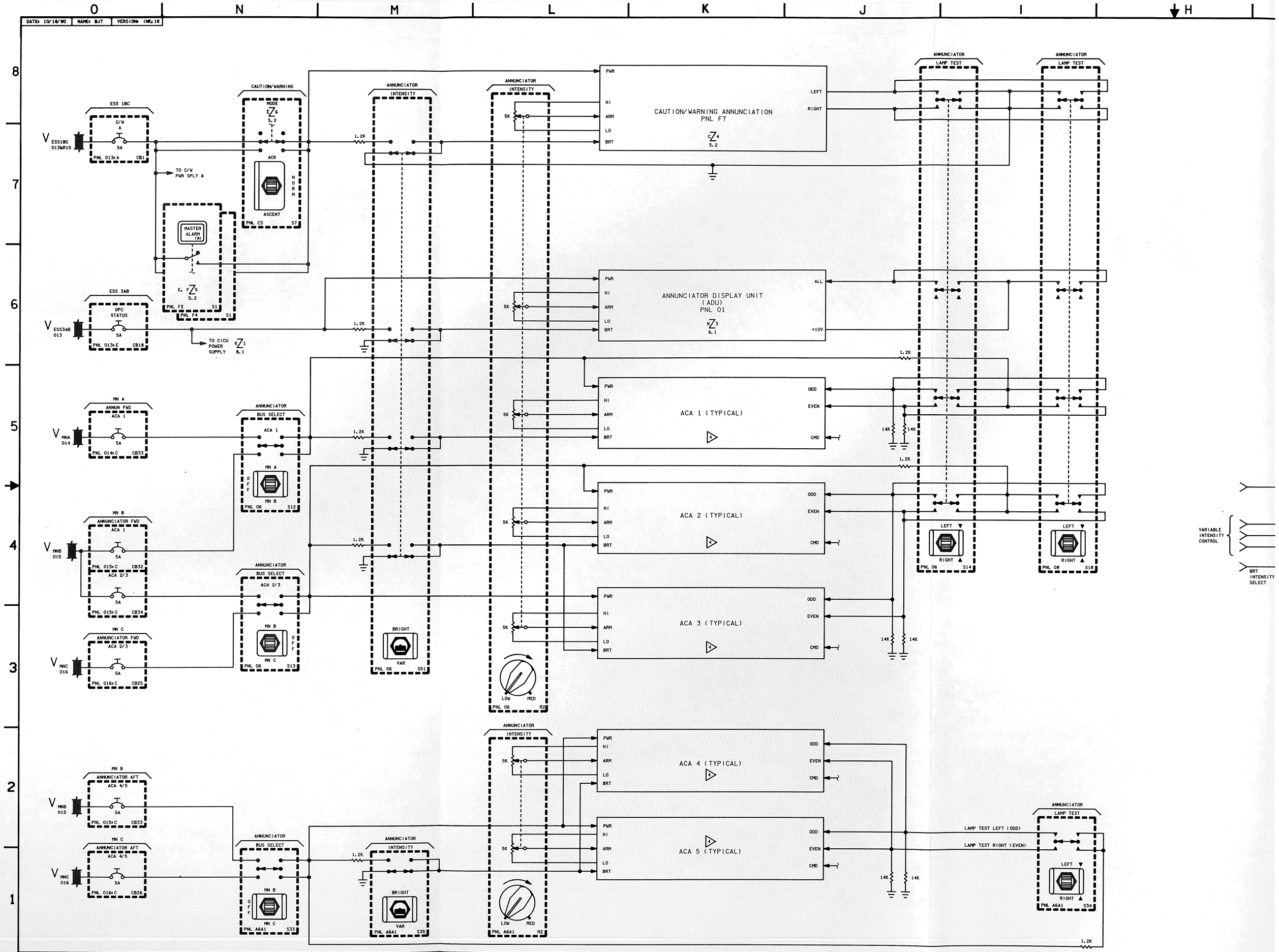

DATE: 10/18/90
NAME: BJT
VERSION: INK: 18
CAUTION/WARNING ANNUNCIATION
PNL F7
ANNUNCIATOR DISPLAY UNIT
(ADU)
PNL 01
ACA 1 (TYPICAL)
ACA 2 (TYPICAL)
ACA 3 (TYPICAL)
ACA 4 (TYPICAL)
ACA 5 (TYPICAL)
ESS 1BC
ESS 3AB
MN A
MN B
MN C
CAUTION/WARNING
ANNUNCIATOR
INTENSITY
ANNUNCIATOR
LAMP TEST
MASTER ALARM
TO C/W PWR SPLY A
TO CICU POWER SUPPLY
ANNUNCIATOR BUS SELECT
ANNUNCIATOR FWD
ANNUNCIATOR AFT
LAMP TEST LEFT (ODD)
LAMP TEST RIGHT (EVEN)
VARIABLE INTENSITY CONTROL
BRT INTENSITY SELECT

BASIC REV E

DATE: 10/15/90	NAME: BJT	VERSION: INK: 9
DATE: 02/14/96	NAME: SVJ	VERSION: BPT: 10
DATE: 03/01/96	NAME: SVJ	VERSION: INK: 10

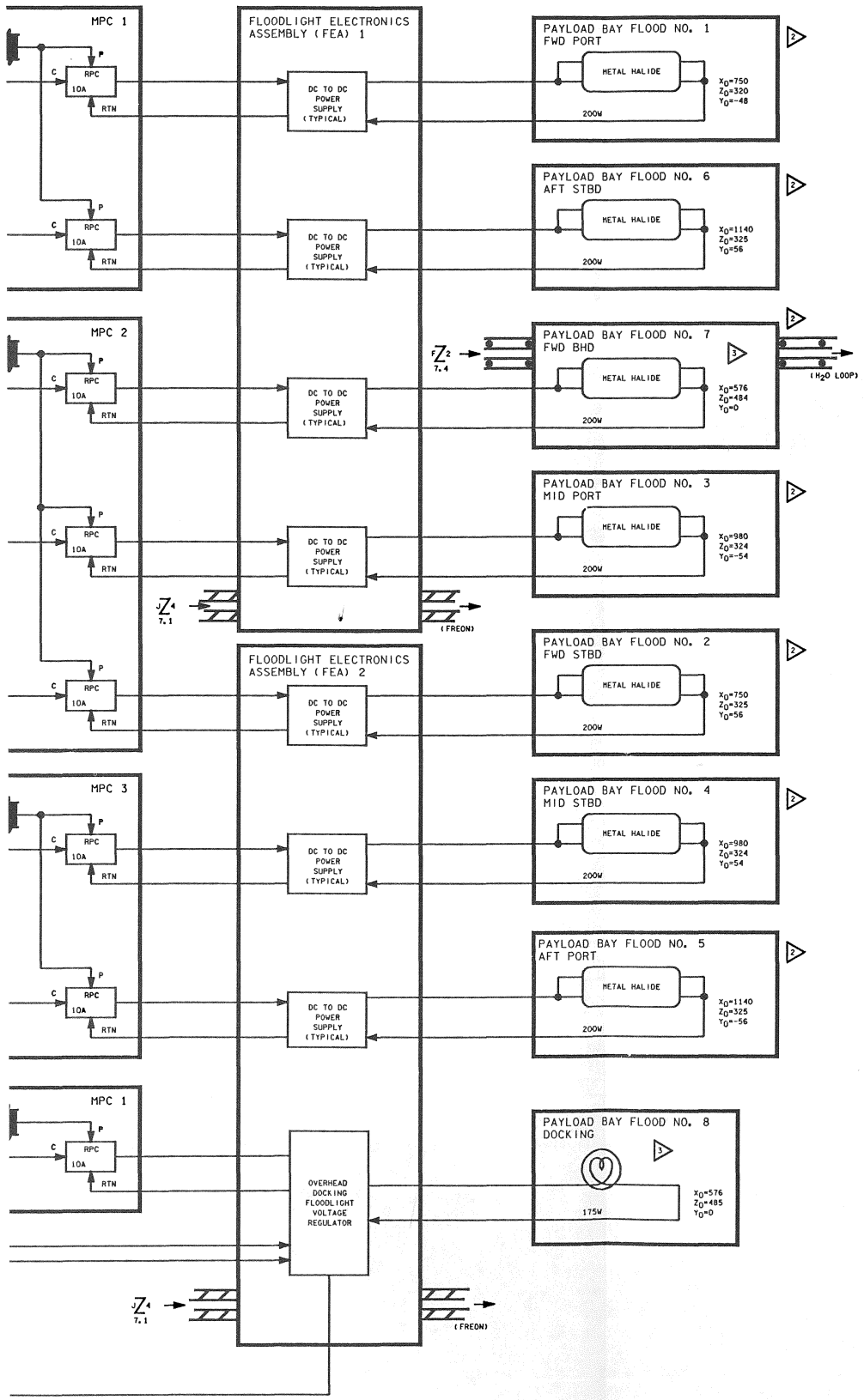

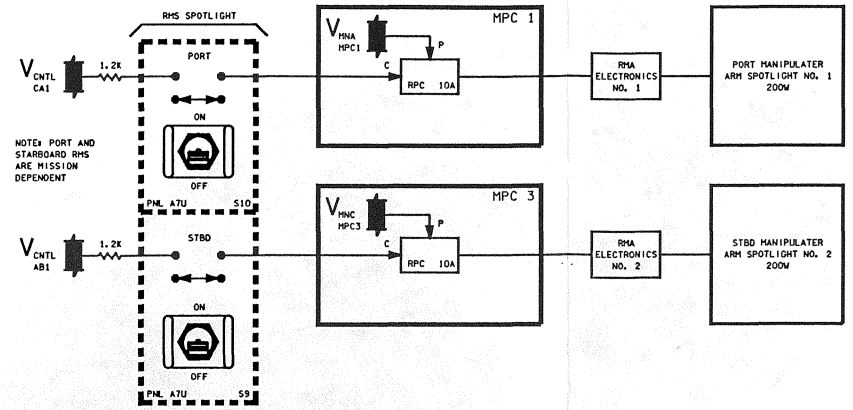

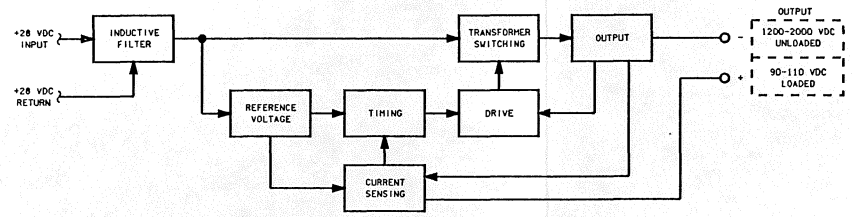

PLB FEA DC TO DC POWER SUPPLY BLOCK DIAGRAM

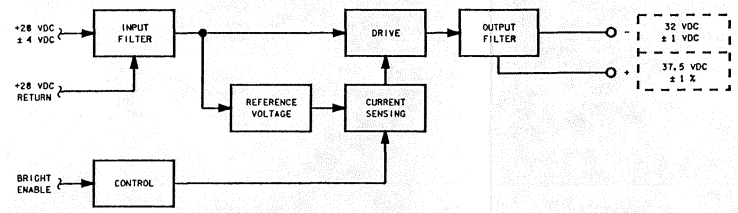

PLB FEA OVERHEAD DOCKING FLOODLIGHT VOLTAGE REGULATOR BLOCK DIAGRAM

5. SEE TABLE 4-II FOR DRAWING REFERENCES

△ - DENOTES CASE GROUND

△3 THE DOCKING AND FWD BHD FLOODLIGHT ARE MOUNTED ON THE SAME COLDPLATE

△2 REQUIRES 2 TO 3 MINUTES TO REACH FULL BRIGHT

NOTES: △1 DIM POSITION IS 60 PERCENT OF FULL BRIGHT

4 EX LTG

SIGNATURE		DATE	NATIONAL AERONAUTICS AND SPACE ADMINISTRATION LYNDON B. JOHNSON SPACE CENTER HOUSTON, TEXAS	
DSGN	L. M. BUCHANAN	1/20/80		
DR	L. M. BUCHANAN	1/20/80	EXTERIOR LIGHTING	
ENGR	L. M. MAHER			
ENGR	M. T. Maher	3/4/96		
APP	David M. Taylor	3/4/96		
APP			SPACE SHUTTLE	DWG NO 4.4
CADS	S. K. Kimbrell	6-17-96	ALL	
LTR E	PCN 6		104.5 X 34	PAGE SHEET 1 OF 1

BASIC REV E-6

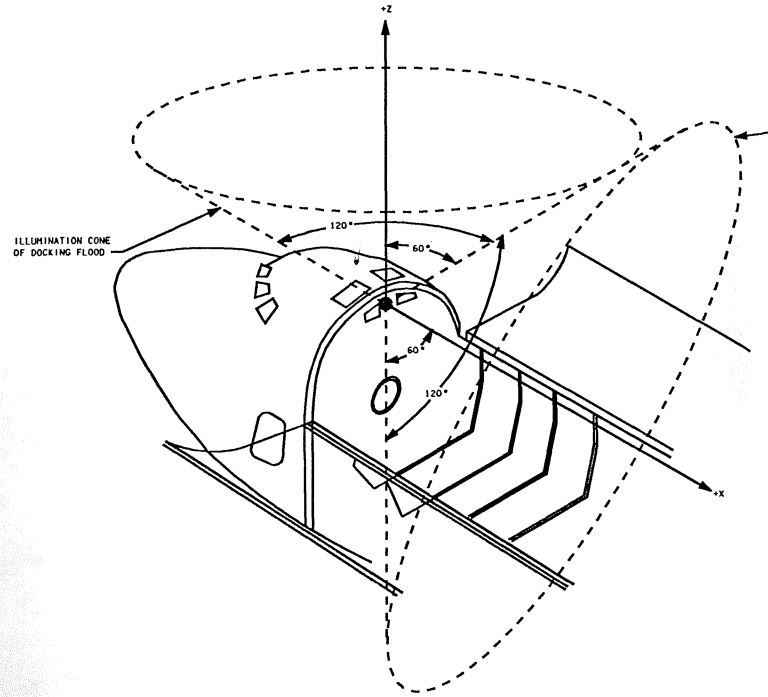

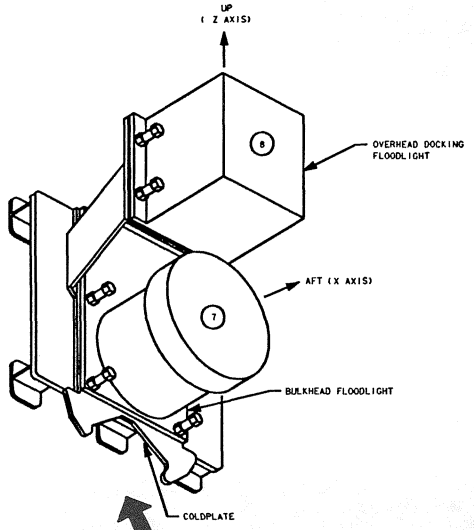

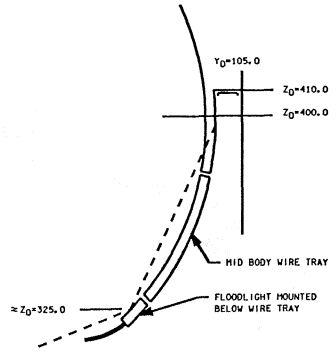

PAYLOAD BAY CROSS SECTION

(SHOWING FLOODLIGHTING ANGLES OF 135° X 135°)

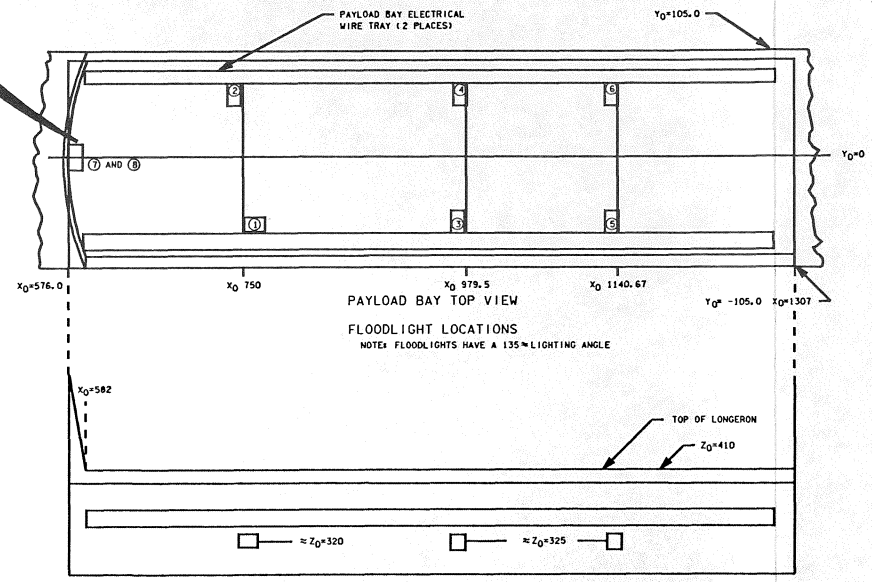

PAYLOAD BAY TOP VIEW

FLOODLIGHT LOCATIONS

NOTE: FLOODLIGHTS HAVE A 135° LIGHTING ANGLE

PAYLOAD BAY VIEW LOOKING INBOARD

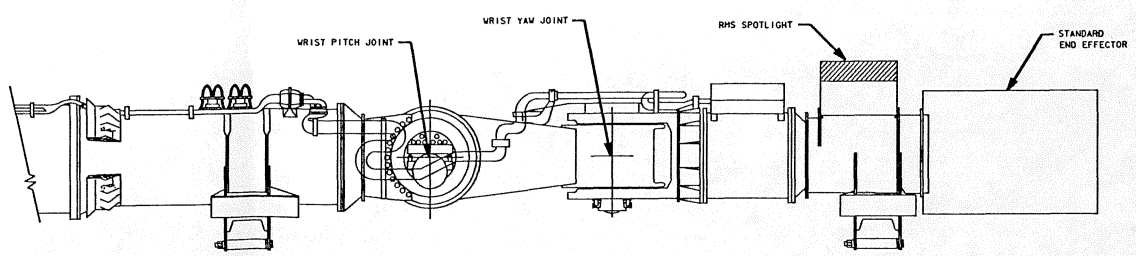

NOTE: RMS MISSION DEPENDENT

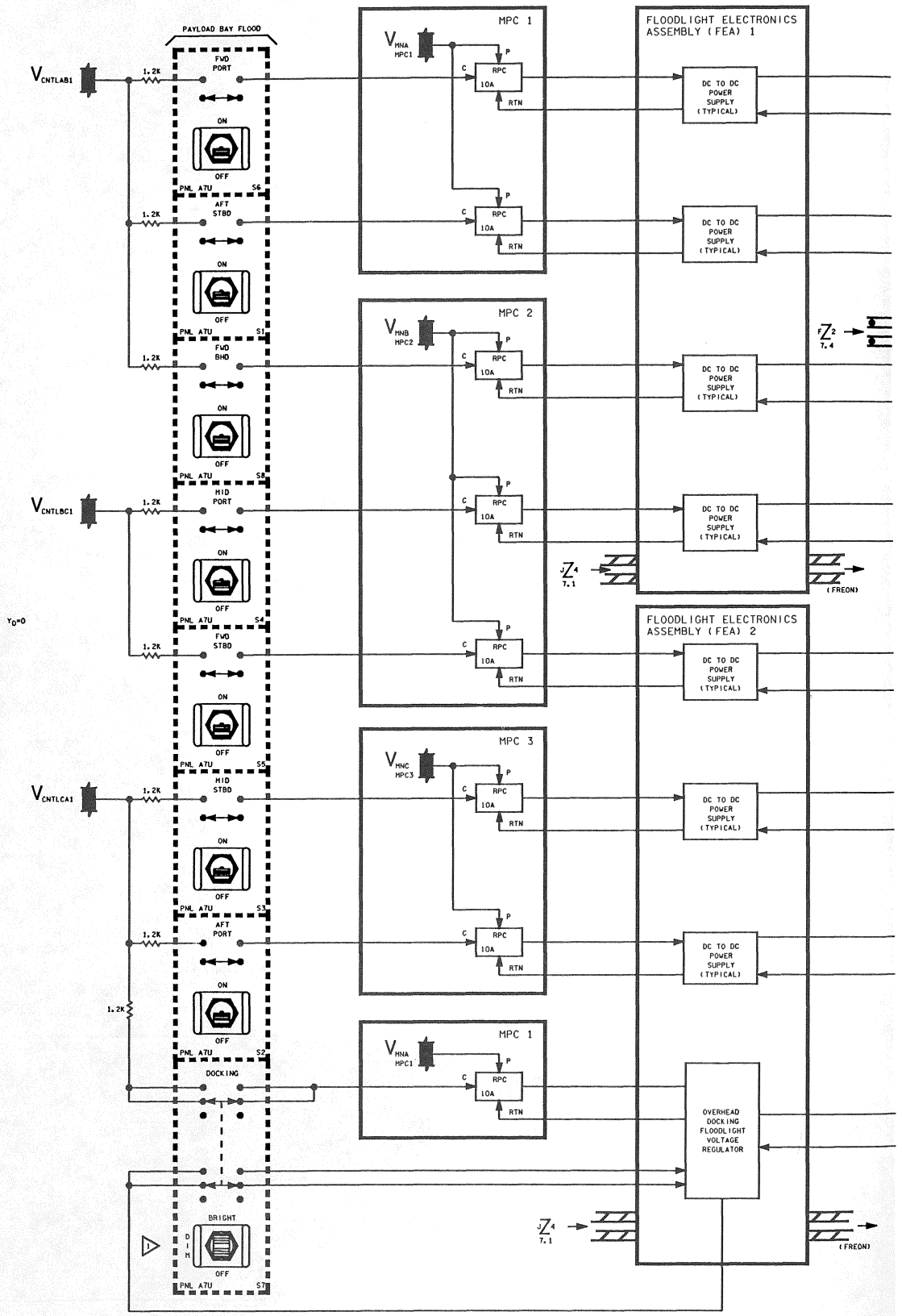

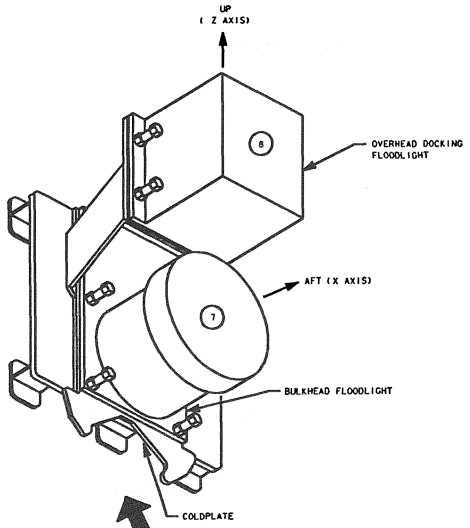

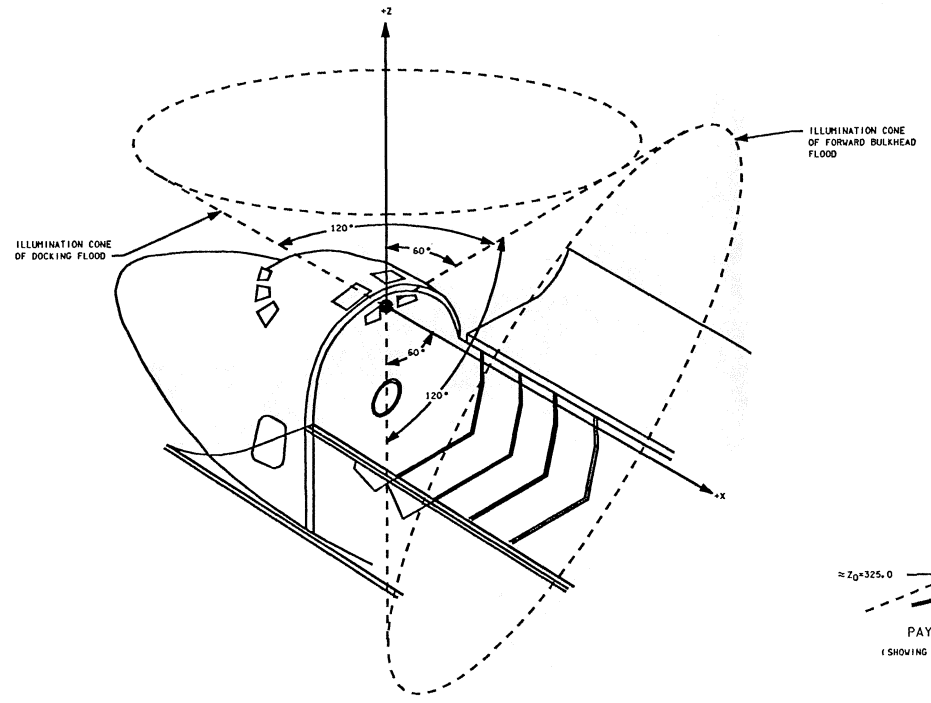

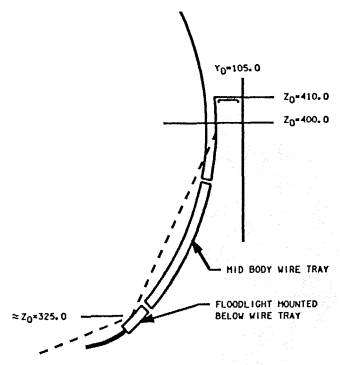

PAYLOAD BAY CROSS SECTION
(SHOWING FLOODLIGHTING ANGLES OF 135° X 135°)

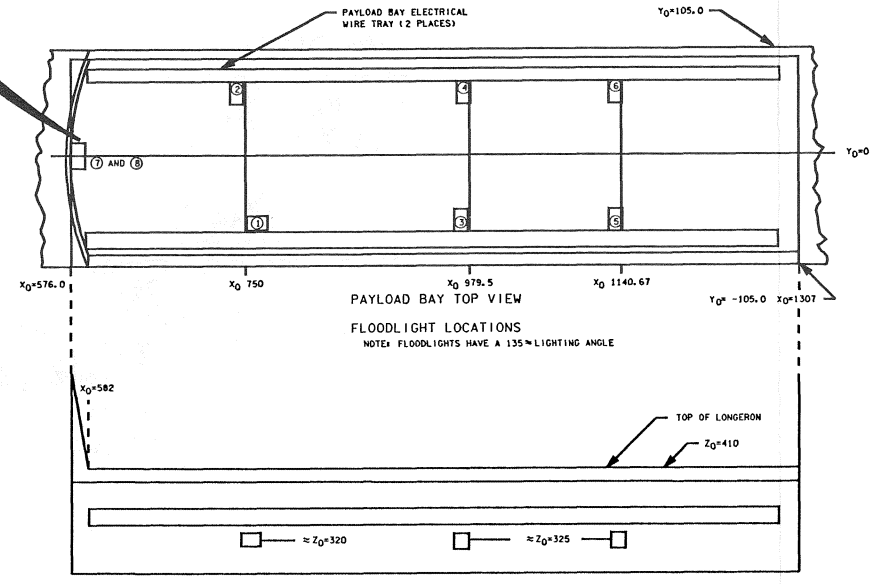

PAYLOAD BAY TOP VIEW

FLOODLIGHT LOCATIONS

NOTE: FLOODLIGHTS HAVE A 135° LIGHTING ANGLE

PAYLOAD BAY VIEW LOOKING INBOARD

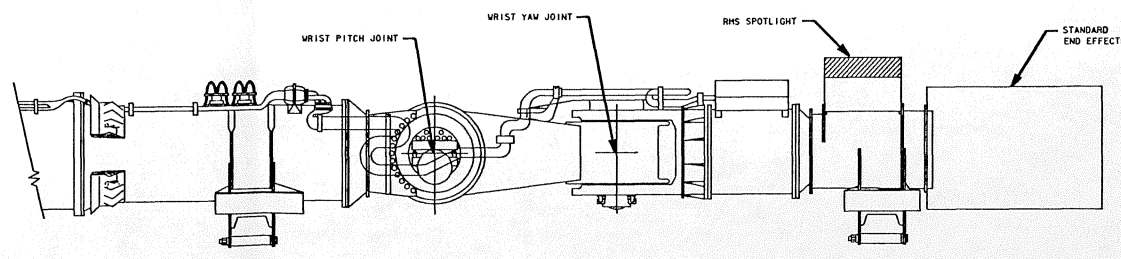

NOTE: RMS MISSION DEPENDENT

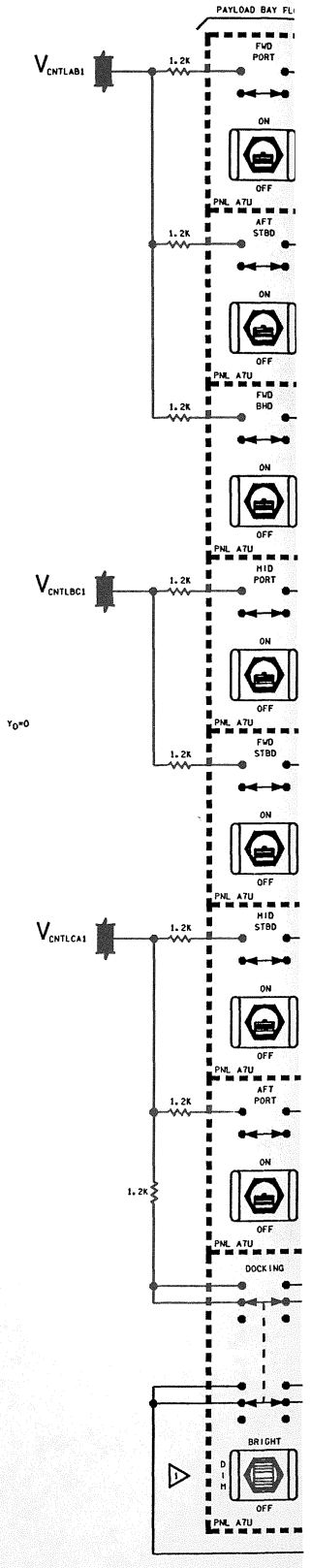

ORBITER DOCKING SYSTEM LIGHTS	
WATTS	125 AT 28 VDC
LUMENS/WATT	12 MINIMUM
BEAM	40° x 40°

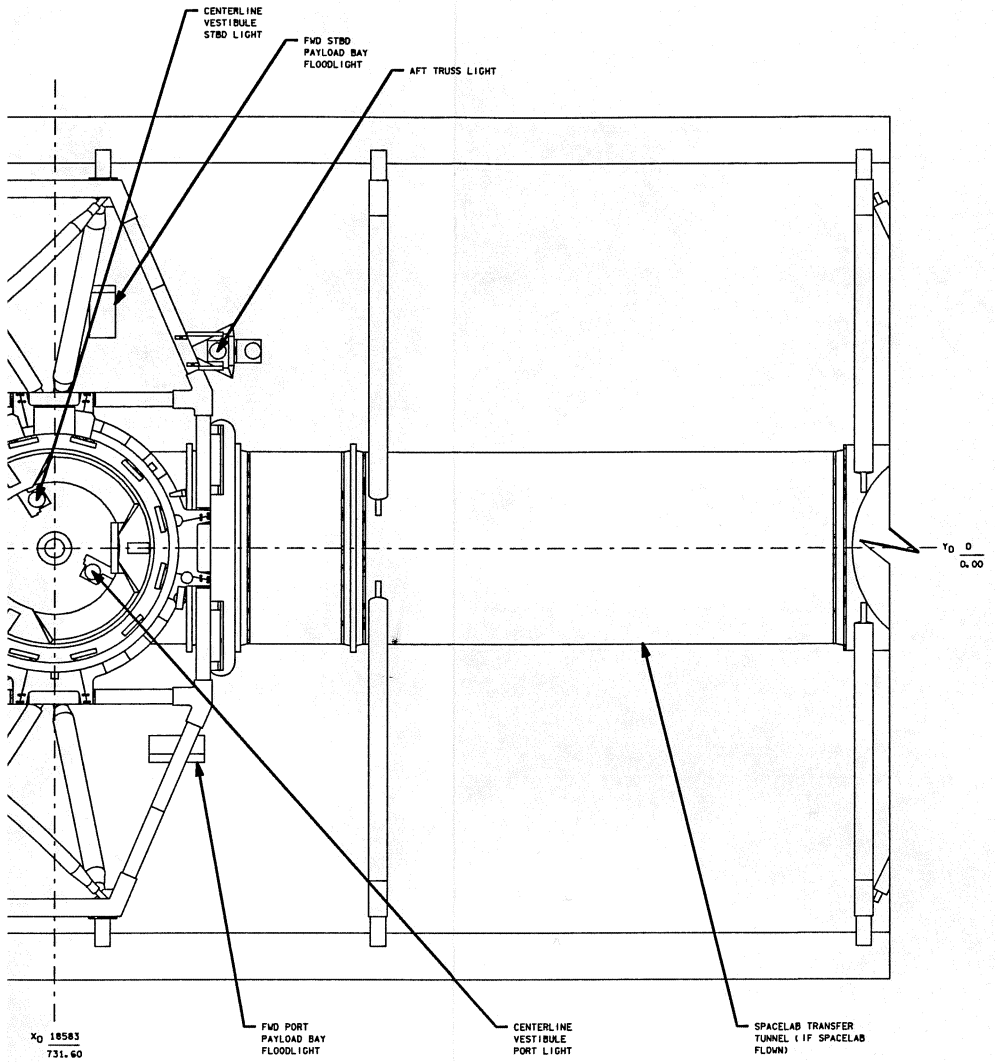

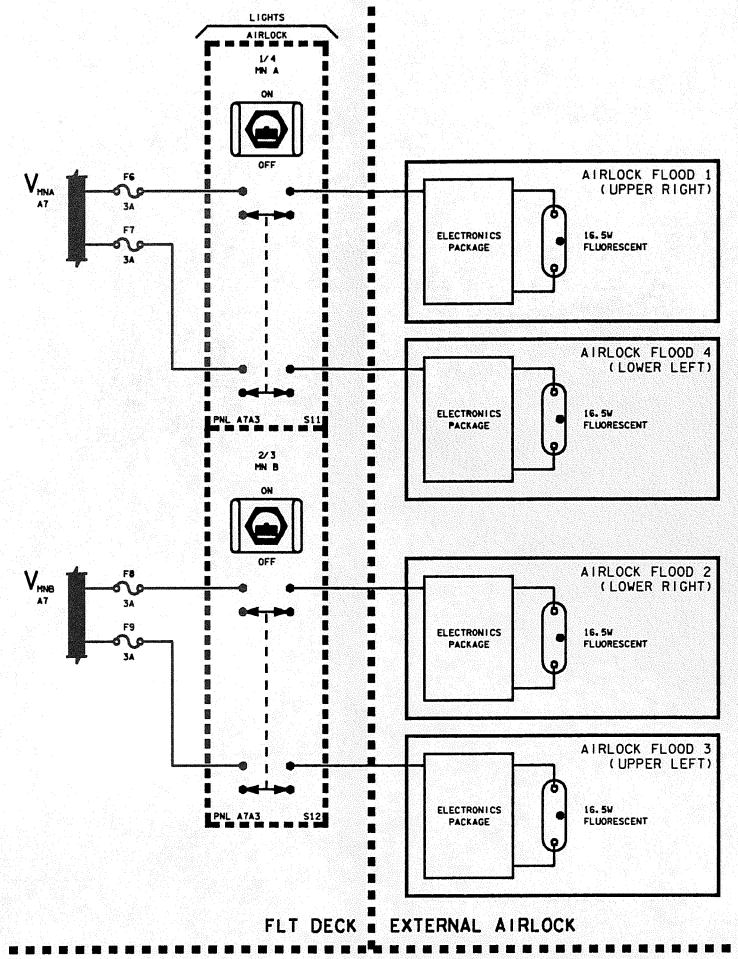

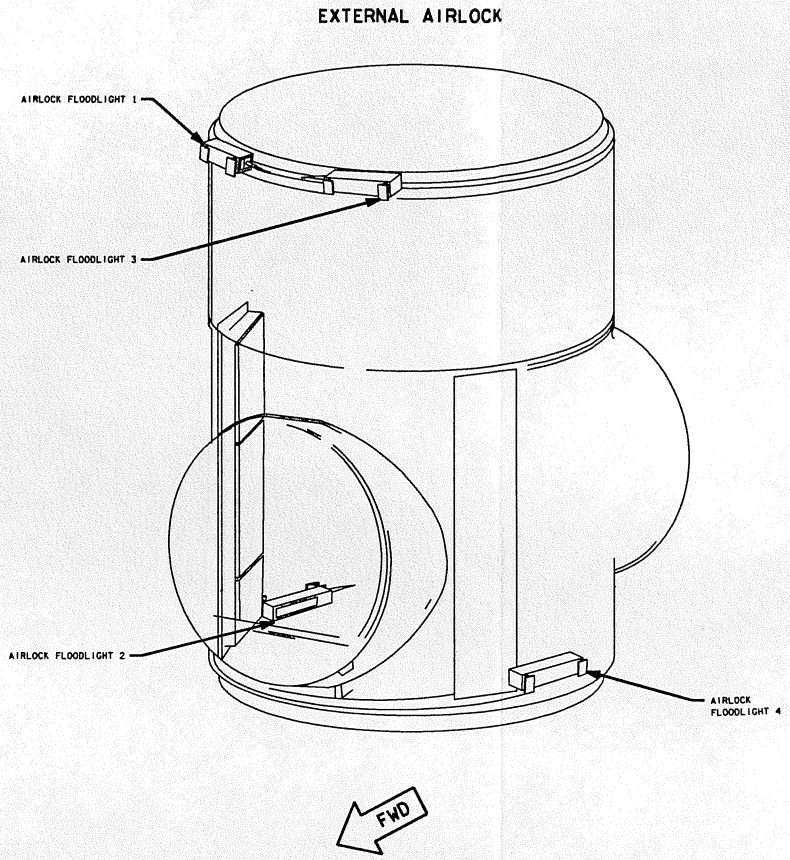

	CENTERLINE LOCATION					
	X_O		Y_O		Z_O	
	IN	MM	IN	MM	IN	MM
	728.34	18500	11.40	290	441.71	11219
	740.94	18820	-7.30	-185	441.71	11219
	687.96	17474	17.82	453	419.21	10648
	770.47	19570	47.43	1205	419.21	10648

OCKING SYSTEM (ODS) CAMERA LIGHT LOCATIONS

ATTACHMENT LOCATION			FIXTURE CENTERLINE			
X_O		SIDE	Y_O		Z_O	
IN	MM		IN	MM	IN	MM
576.00	14630	AFT	0.00	0	484.20	12299
750.00	19050	FORWARD	56.00	1422	325.20	8260
750.00	19050	AFT	-48.00	-1219	320.00	8126
975.50	24879	FORWARD	54.30	1379	323.90	8227
975.50	24879	FORWARD	-54.30	-1379	323.90	8227
140.67	28973	FORWARD	56.00	1422	324.90	8252
140.67	28973	FORWARD	-56.00	-1422	324.90	8252

HUTTLE CARGO BAY LIGHT COORDINATES

▷ TRUSS AND C/L VESTIBULE LIGHT ASSEMBLIES USE SAME DESIGN AS THE RMS SPOTLIGHT ASSEMBLY

NOTES: ▷ 10A CIRCUIT BREAKERS ARE MAINLY USED TO PROVIDE REDUNDANCY AGAINST A FAILED-ON LIGHT FAILURE SCENARIO

5 ODS AL LGTS

SIGNATURE	DATE	NATIONAL AERONAUTICS AND SPACE ADMINISTRATION LYNDON B. JOHNSON SPACE CENTER HOUSTON, TEXAS
DSGN		
DR B. TEDDER	07/13/94	
ENGR R. ARMSTRONG		ORBITER DOCKING SYSTEM/ AIRLOCK LIGHTS
ENGR	7/27/94	
APP	8/5/94	
APP		SPACE SHUTTLE / DWG NO 4.5
CADS S. K. Kirchhoff	8-9-94	ALL
LTR E PCN 4		82.5 X 34 / PAGE / SHEET 1 OF 1

BASIC REV E-4

SHUTTLE CARGO BAY LIGHT COORDINATES

LOCATION OF LIGHTS	ATTACHMENT LOCATION				FIXTURE CENTERLINE			
	X_O		SIDE		Y_O		Z_O	
	IN	MM			IN	MM	IN	MM
FWD BULKHEAD	576.00	14630	AFT	0.00	0.00	0	484.20	12299
FWD STBD	750.00	19050	FORWARD	56.00	1422	325.20	8260	
FWD PORT	750.00	19050	AFT	-48.00	-1219	320.00	8126	
MID STBD	974.50	24879	FORWARD	-54.30	-1379	323.90	8227	
MID PORT	974.50	24879	FORWARD	56.00	1422	324.90	8252	
AFT STBD	1140.67	28973	FORWARD	-56.00	-1422	324.90	8252	
AFT PORT	1140.67	28973	FORWARD	-56.00	-1422	324.90	8252	

ORBITER DOCKING SYSTEM (ODS) CAMERA LIGHT LOCATIONS

ODS LIGHTS	CENTERLINE LOCATION							
	X_O		Y_O		Z_O			
	IN	MM	IN	MM	IN	MM		
CENTERLINE CAMERA LIGHTS	728.34	18500	11.40	290	441.71	11219		
	740.94	18820	-7.30	-185	441.71	11219		
TRUSS CAMERA LIGHTS	687.96	17474	17.82	453	419.21	10648		
	770.47	19570	47.43	1205	419.21	10648		

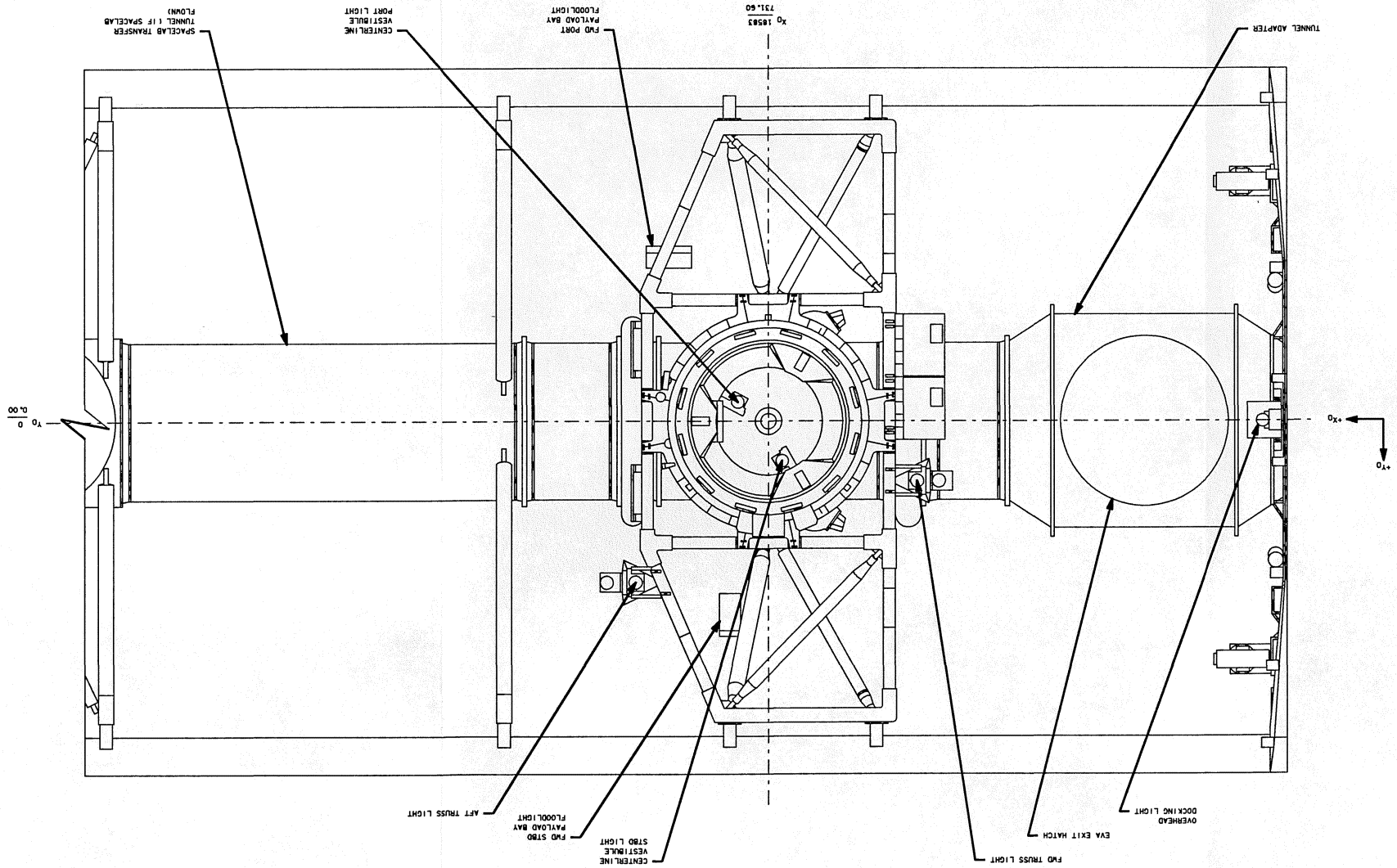

ORBITER DOCKING SYSTEM LIGHTS WATTS LUMENS/WATT BEAM	125 AT 28 VDC 12 MINIMUM 40° X 40°

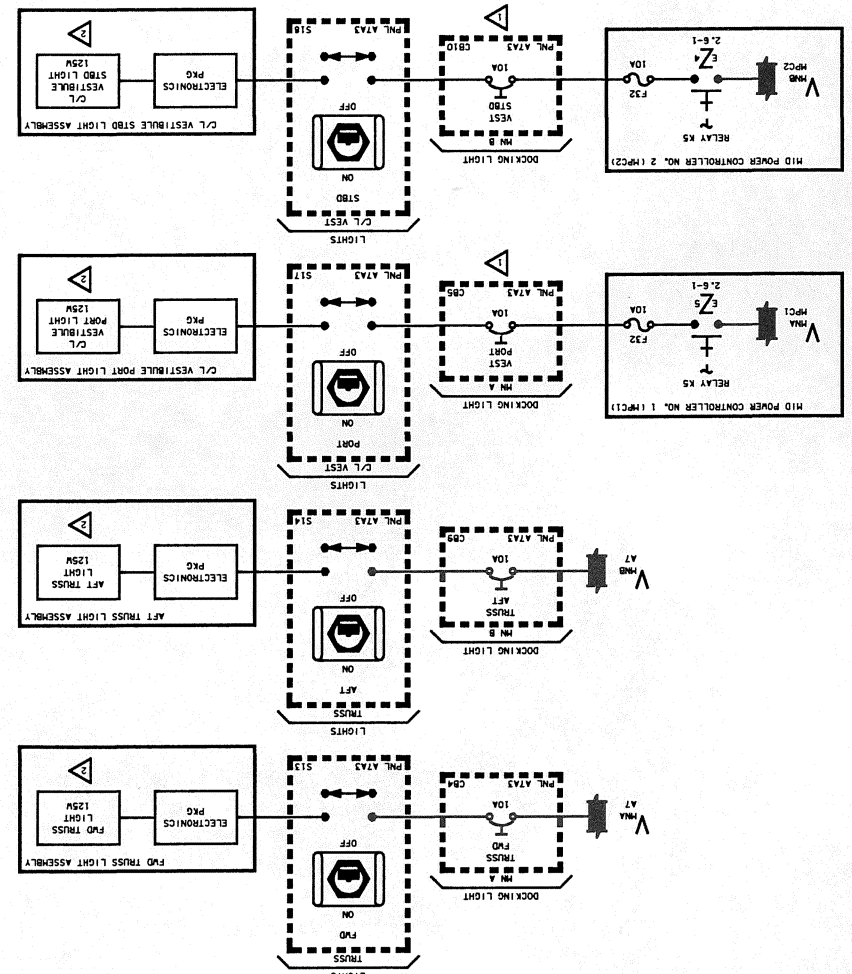

DATE	NAME	VERSION
07/20/94	PSD	INK.1

ACA NO. 3

LAMP TEST RIGHT - EVEN

No. bulbs	Redundant Bulb Pwr	Brightness Control	Panel Number	Light title	Light No.	Color	Channel	No. bulbs	Redundant Bulb Pwr	Brightness Control
—		B&V	F4	BFC	(XDS3)	Y	24	2		B&V
—		B&V		MASTER ALARM	(S1)	R	32	2	ACA1	B&M
—		B&V								
—		B&V	F7A7	MAIN ENGINE 1 STATUS -- SHUTDOWN CTR	(XDS1)	R	8	2		B&V
—		B&V		OUT OF LIMIT CTR	(XDS1)	Y	16	2		B&V
2		B&V	--	SPARE		-	34	-		B&V
2		B&V								
2		B&V	--	SPARE		-	38	-		B&V
2		B&V								
			--	SPARE		-	40	-		B&V
-		B&V								
			C3A6	ORBITAL DAP SELECT A	(S1)	W	2	2		B&V
2		B&V		SELECT B	(S2)	W	4	2		B&V
2		B&V		CONTROL AUTO	(S3)	W	6	2		B&V
				TRANSLATION ORBITER DAP -- X HIGH	(S16)	W	10	2		B&V
1	ACA2	B&V		Y HIGH	(S17)	W	12	2		B&V
1	ACA2	B&V		Z HIGH	(S18)	W	14	2		B&V
1	ACA2	B&V		X NORM	(S19)	W	18	2		B&V
1	ACA2	B&V		Y NORM	(S20)	W	20	2		B&V
1	ACA2	B&V		Z NORM	(S21)	W	22	2		B&V
1	ACA2	B&V		X PULSE	(S22)	W	26	2		B&V
1	ACA1, 2	BO		Y PULSE	(S23)	W	28	2		B&V
				Z PULSE	(S24)	W	30	2		B&V
2	ACA2	B&V								
2		B&V	M052J	MASTER ALARM	(S3)	R	36	2	ACA1	MO

ACA NO. 4

LAMP TEST RIGHT - EVEN

No. bulbs	Redundant Bulb Pwr	Brightness Control	Panel Number	Light title	Light No.	Color	Channel	No. bulbs	Redundant Bulb Pwr	Brightness Control
2		B&V	A7A1	VIDEO INPUT -- FWD BAY	(S27)	W	14	2		B&V
2		B&V		KEEL/EVA	(S28)	W	16	2		B&V
2		B&V		AFT BAY	(S29)	W	18	2		B&V
2		B&V		PL 1	(S33)	W	20	2		B&V
2		B&V		PL 2	(S34)	W	22	2		B&V
2		B&V		PL 3	(S35)	W	24	2		B&V
2		B&V		MID DECK	(S55)	W	34	2		B&V
2		B&V		VIDEO OUTPUT -- MON 1	(S19)	W	2	2		B&V
2		B&V		MON 2	(S23)	W	8	2		B&V
2		B&V		MUX 1L	(S20)	W	4	2		B&V
2		B&V		MUX 1R	(S21)	W	6	2		B&V
2		B&V		MUX 2L	(S24)	W	10	2		B&V
-		B&V		MUX 2R	(S25)	W	12	2		B&V
				GAMMA -- WHITE STRCH	(S48)	W	26	2		B&V
-		B&V		NORM	(S49)	W	28	2		B&V
-		B&V		BLACK STRCH	(S50)	W	30	2		B&V
-		B&V		MASTER ALARM	(S51)	R	32	2	ACA5	B&M
-		B&V								
-		B&V	--	SPARE		-	36	-		B&V
-		B&V	--	SPARE		-	38	-		B&V
-		B&V	--	SPARE		-	40	-		B&V
-		B&V								

ACA NO. 5

LAMP TEST RIGHT - ODD

Panel Number	Light title	Light No.	Color	Channel	No. bulbs	Redundant Bulb Pwr	Brightness Control
A2	MIC	--	W	35	2		B&V
	KEY	--	W	37	2		B&V
A6A1	ORBITAL DAP - CONTROL -- MAN	(S11)	W	1	2		B&V
	- RCS JETS -- NORM	(S12)	W	3	2		B&V
	-- VERN	(S13)	W	5	2		B&V
	ROTATION ORBITAL DAP ROLL DISC RATE	(S17)	W	9	2		B&V
	PITCH DISC RATE	(S18)	W	11	2		B&V
	YAW DISC RATE	(S19)	W	13	2		B&V
	ROLL ACCEL	(S23)	W	17	2		B&V
	PITCH ACCEL	(S24)	W	19	2		B&V
	YAW ACCEL	(S25)	W	21	2		B&V
	ROLL PULSE	(S29)	W	25	2		B&V
	PITCH PULSE	(S30)	W	27	2		B&V
	YAW PULSE	(S31)	W	29	2		B&V
--	SPARE		-	7	-		B&V
--	SPARE		-	15	-		B&V
--	SPARE		-	23	-		B&V
--	SPARE		-	31	-		B&V
--	SPARE		-	33	-		B&V
--	SPARE		-	39	-		B&V

LAMP TEST RIGHT - EVEN

Panel Number	Light title	Light No.	Color	Channel	No. bulbs	Redundant Bulb Pwr	Brightness Control
A7A1	VIDEO INPUT -- RMS STBD	(S30)	W	14	2		B&V
	RMS PORT	(S31)	W	16	2		B&V
	FLT/DECK	(S32)	W	18	2		B&V
	MUX 1	(S36)	W	20	2		B&V
	MUX 2	(S37)	W	22	2		B&V
	TEST	(S38)	W	24	2		B&V
	VIDEO OUTPUT --DOWNLINK	(S22)	W	6	2		B&V
	PAYLOAD	(S26)	W	12	2		B&V
	ALC -- PEAK	(S45)	W	26	2		B&V
	NORM	(S46)	W	28	2		B&V
	AVG	(S47)	W	30	2		B&V
	MASTER ALARM	(S51)	R	32	2	ACA4	B&M
--	SPARE		-	2	-		B&V
--	SPARE		-	4	-		B&V
--	SPARE		-	8	-		B&V
--	SPARE		-	10	-		B&V
--	SPARE		-	34	-		B&V
--	SPARE		-	36	-		B&V
--	SPARE		-	38	-		B&V
--	SPARE		-	40	-		B&V

2. REFER TO TABLE 4-II FOR DRAWING REFERENCES

NOTES: 1 OV-102 ONLY

SIGNATURE	DATE
ENGR R. AL-AYOUBI	
ENGR Rami Al-Ayoubi	10/18/90
APP Paul M Joyce	10/18/90

ACA NO. 1

r	Channel	No. bulbs	Redundant Bulb Pwr	Brightness Control
	1	2		B&V
	3	2		B&V
	5	2		B&V
	7	2		B&V
	9	2		B&V
	13	2		B&V
	15	2		B&V
	17	2		B&V
	19	2		B&V
	21	2		B&V
	23	2		B&V
	25	2		B&V
	27	2		B&V
	29	2		B&V
	11	2		B&V
	37	2		B&V
	33	2	ACA2	B&M
	31	2	ACA2	B&M
	35	1	ACA2,3	BO
	39	1	ACA2,3	BO

LAMP TEST RIGHT - EVEN

Panel Number	Light title	Light No.	Color	Channel	No. bulbs	Redundant Bulb Pwr	Brightness Control
C3A6	ORBITAL DAP - CONTROL -- MAN	(S4)	W	2	2		B&V
	- RCS JETS -- NORM	(S5)	W	4	2		B&V
	-- VERN	(S6)	W	6	2		B&V
	ROTATION ORBITAL DAP -- ROLL DISC RATE	(S7)	W	10	2		B&V
	PITCH DISC RATE	(S8)	W	12	2		B&V
	YAW DISC RATE	(S9)	W	14	2		B&V
	ROLL ACCEL	(S10)	W	18	2		B&V
	PITCH ACCEL	(S11)	W	20	2		B&V
	YAW ACCEL	(S12)	W	22	2		B&V
	ROLL PULSE	(S13)	W	26	2		B&V
	PITCH PULSE	(S14)	W	28	2		B&V
	YAW PULSE	(S15)	W	30	2		B&V
F4	MASTER ALARM	(S1)	R	32	2	ACA3	B&M
F7A7	MAIN ENGINE 2 STATUS OUT OF LIMIT LEFT	(XDS2)	R	8	2		B&V
	SHUTDOWN LEFT	(XDS2)	Y	16	2		B&V
M052J	MASTER ALARM	(S3)	R	36	2	ACA3	MO
--	SPARE		-	24	-		B&V
--	SPARE		-	34	-		B&V
--	SPARE		-	38	-		B&V
--	SPARE		-	40	-		B&V

AC

LAMP TEST LEFT - ODD

Panel Number	Light title	Light No.	Color	Channel	No. bulbs	Redundant Bulb Pwr	Brightness Control
--	SPARE		-	1	-		B&V
--	SPARE		-	3	-		B&V
--	SPARE		-	5	-		B&V
--	SPARE		-	7	-		B&V
--	SPARE		-	9	-		B&V
F3	NWS FAIL	(XDS3)	Y	35	2		B&V
L1A1	FIRE SUPPRESSION AV BAY 1 AGENT DISCH	(S4)	Y	11	2		B&V
	2 AGENT DISCH	(S5)	Y	13	2		B&V
	3 AGENT DISCH	(S6)	Y	15	2		B&V
--	SPARE		-	37	-		B&V
F6A5	LANDING GEAR -- ARM	(S1)	Y	31	2		B&V
	DOWN	(S2)	G	33	2		B&V
F6A8	RCS COMMAND -- ROLL L	(XDS1)	W	17	1	ACA2	B&V
	ROLL R	(XDS1)	W	19	1	ACA2	B&V
	PITCH U	(XDS1)	W	21	1	ACA2	B&V
	PITCH D	(XDS1)	W	23	1	ACA2	B&V
	YAW L	(XDS1)	W	25	1	ACA2	B&V
	YAW R	(XDS1)	W	27	1	ACA2	B&V
	RANGE SAFE ARM	(XDS3)	R	39	1	ACA1,2	BO
F7A5	SM ALERT	(XDS1)	B	29	2	ACA2	B&V
F2	NWS FAIL [1]	(XDS2)	Y	35	2		B&V

ACA NO. 2

DD r	Channel	No. bulbs	Redundant Bulb Pwr	Brightness Control
	1	2		B&V
	3	2		B&V
	5	2		B&V
	7	2		B&V
	9	2		B&V
	11	-		B&V
	13	-		B&V
	15	-		B&V
	33	2	ACA1	B&M
	31	2	ACA1	B&M
	39	1	ACA1,3	BO
	17	1	ACA3	B&V
	19	1	ACA3	B&V
	21	1	ACA3	B&V
	23	1	ACA3	B&V
	25	1	ACA3	B&V
	27	1	ACA3	B&V
	29	2	ACA3	B&V
	35	2		MO
	37	2		MO

LAMP TEST RIGHT - EVEN

Panel Number	Light title	Light No.	Color	Channel	No. bulbs	Redundant Bulb Pwr	Brightness Control
--	SPARE		-	2	-		B&V
--	SPARE		-	4	-		B&V
--	SPARE		-	6	-		B&V
--	SPARE		-	8	-		B&V
--	SPARE		-	10	-		B&V
F3	ANTISKID FAIL	(XDS4)	Y	12	2		B&V
F4	PITCH -- AUTO	(S2)	W	14	2		B&V
	CSS	(S3)	W	16	2		B&V
	GAIN ENA [1]	(S4)	W	18	2		B&V
	ROLL/YAW -- AUTO	(S5)	W	20	2		B&V
	CSS	(S6)	W	22	2		B&V
	GAIN ENA [1]	(S7)	W	24	2		B&V
	SPD BK/THROT -- AUTO	(S8)	W	26	2		B&V
	MAN	(S8)	W	28	2		B&V
	BODY FLAP -- AUTO	(S9)	W	30	2		B&V
	MAN	(S9)	W	34	2		B&V
F7A7	MAIN ENGINE 3 STATUS -- SHUTDOWN RIGHT	(XDS3)	R	32	2		B&V
	OUT OF LIMIT RIGHT	(XDS3)	Y	38	2		B&V
F8A5	LANDING GEAR -- ARM	(S1)	Y	36	2		B&V
	DOWN	(S2)	G	40	2		B&V
F4	ANTI-SKID FAIL [1]	(XD52)	Y	12	2		B&V

AC

LAMP TEST LEFT - ODD

Panel Number	Light title	Light No.	Color	Channel	No. bulbs	Redundant Bulb Pwr	Brightness Control
A6A1	ORBITIAL DAP - SELECT -- A	(S8)	W	1	2		B&V
	- SELECT -- B	(S9)	W	3	2		B&V
	- CONTROL -- AUTO	(S10)	W	5	2		B&V
	TRANSLATION ORBITER DAP -- X HIGH	(S14)	W	9	2		B&V
	Y HIGH	(S15)	W	11	2		B&V
	Z HIGH	(S16)	W	13	2		B&V
	X NORM	(S20)	W	17	2		B&V
	Y NORM	(S21)	W	19	2		B&V
	Z NORM	(S22)	W	21	2		B&V
	X PULSE	(S26)	W	25	2		B&V
	Y PULSE	(S27)	W	27	2		B&V
	Z PULSE	(S28)	W	29	2		B&V
--	SPARE		-	7	-		B&V
--	SPARE		-	15	-		B&V
--	SPARE		-	23	-		B&V
--	SPARE		-	31	-		B&V
--	SPARE		-	33	-		B&V
--	SPARE		-	35	-		B&V
--	SPARE		-	37	-		B&V
--	SPARE		-	39	-		B&V

ALL VEHICLES
REV E

TABLE 4-I. - ANNUNCIATOR CONTROL ASSEMBLY CHANNEL ASSIGNMENTS

ACA NO. 1

LAMP TEST LEFT - ODD

Panel Number	Light title	Light No.	Color	Channel	No. bulbs	Redundant Bulb Pwr	Brightness Control
L1A1	SMOKE DETECTION A -- CABIN	(XDS1)	R	1	2		B&V
	L FLT DECK	(XDS1)	R	3	2		B&V
	AV BAY 1	(XDS1)	R	5	2		B&V
	AV BAY 2	(XDS1)	R	7	2		B&V
	AV BAY 3	(XDS1)	R	9	2		B&V
F2	PITCH -- AUTO	(S2)	W	13	2		B&V
	CSS	(S3)	W	15	2		B&V
	GAIN ENA (1)	(S4)	W	17	2		B&V
	ROLL/YAW -- AUTO	(S5)	W	19	2		B&V
	CSS	(S6)	W	21	2		B&V
	GAIN ENA (1)	(S7)	W	23	2		B&V
	SPD BK/THROT -- AUTO	(S8)	W	25	2		B&V
	MAN	(S8)	W	27	2		B&V
	BODY FLAP -- AUTO	(S9)	W	29	2		B&V
	MAN	(S9)	W	11	2		B&V
	BFC	(XDS3)	Y	37	2		B&V
	MASTER ALARM	(S1)	R	33	2	ACA2	B&M
F6A8	ABORT	(S2)	R	31	2	ACA2	B&M
	RANGE SAFE ARM	(XDS3)	R	35	1	ACA2, 3	BO
	RANGE SAFE ARM	(XDS3)	R	39	1	ACA2, 3	BO

LAMP TEST RIGHT - EVEN

Panel Number	Light title	Light No.	Color	Channel	No. bulbs	Redundant Bulb Pwr	Brightness Control
C3A6	ORBITAL DAP - CONTROL -- MAN	(S4)	W	2	2		B&V
	- RCS JETS -- NORM	(S5)	W	4	2		B&V
	-- VERN	(S6)	W	6	2		B&V
	ROTATION ORBITAL DAP -- ROLL DISC RATE	(S7)	W	10	2		B&V
	PITCH DISC RATE	(S8)	W	12	2		B&V
	YAW DISC RATE	(S9)	W	14	2		B&V
	ROLL ACCEL	(S10)	W	18	2		B&V
	PITCH ACCEL	(S11)	W	20	2		B&V
	YAW ACCEL	(S12)	W	22	2		B&V
	ROLL PULSE	(S13)	W	26	2		B&V
	PITCH PULSE	(S14)	W	28	2		B&V
	YAW PULSE	(S15)	W	30	2		B&V
F4	MASTER ALARM	(S1)	R	32	2	ACA3	B&M
F7A7	MAIN ENGINE 2 STATUS OUT OF LIMIT LEFT	(XDS2)	R	8	2		B&V
	SHUTDOWN LEFT	(XDS2)	Y	16	2		B&V
M052J	MASTER ALARM	(S3)	R	36	2	ACA3	MO
--	SPARE		-	24	-		B&V
--	SPARE		-	34	-		B&V
--	SPARE		-	38	-		B&V
--	SPARE		-	40	-		B&V

ACA NO. 2

LAMP TEST LEFT - ODD

Panel Number	Light title	Light No.	Color	Channel	No. bulbs	Redundant Bulb Pwr	Brightness Control
L1A1	SMOKE DETECTION B -- PAYLOAD	(XDS1)	R	1	2		B&V
	R FLT DECK	(XDS1)	R	3	2		B&V
	AV BAY 1	(XDS1)	R	5	2		B&V
	AV BAY 2	(XDS1)	R	7	2		B&V
	AV BAY 3	(XDS1)	R	9	2		B&V
--	SPARE		-	11	-		B&V
--	SPARE		-	13	-		B&V
--	SPARE		-	15	-		B&V
F2	MASTER ALARM	(S1)	R	33	2	ACA1	B&M
F6A8	ABORT	(S2)	R	31	2	ACA1	B&M
	RANGE SAFE ARM	(XDS3)	R	39	1	ACA1, 3	BO
	RCS COMMAND -- ROLL L	(XDS1)	W	17	1	ACA3	B&V
	ROLL R	(XDS1)	W	19	1	ACA3	B&V
	PITCH U	(XDS1)	W	21	1	ACA3	B&V
	PITCH D	(XDS1)	W	23	1	ACA3	B&V
	YAW L	(XDS1)	W	25	1	ACA3	B&V
	YAW R	(XDS1)	W	27	1	ACA3	B&V
F7A5	SM ALERT	(XDS1)	B	29	2	ACA3	B&V
M029J	MIC	--	W	35	2		MO
	KEY	--	W	37	2		MO

LAMP TEST RIGHT - EVEN

Panel Number	Light title	Light No.	Color	Channel	No. bulbs	Redundant Bulb Pwr	Brightness Control
--	SPARE		-	2	-		B&V
--	SPARE		-	4	-		B&V
--	SPARE		-	6	-		B&V
--	SPARE		-	8	-		B&V
--	SPARE		-	10	-		B&V
F3	ANTISKID FAIL	(XDS4)	Y	12	2		B&V
F4	PITCH -- AUTO	(S2)	W	14	2		B&V
	CSS	(S3)	W	16	2		B&V
	GAIN ENA (1)	(S4)	W	18	2		B&V
	ROLL/YAW -- AUTO	(S5)	W	20	2		B&V
	CSS	(S6)	W	22	2		B&V
	GAIN ENA (1)	(S7)	W	24	2		B&V
	SPD BK/THROT -- AUTO	(S8)	W	26	2		B&V
	MAN	(S8)	W	28	2		B&V
	BODY FLAP -- AUTO	(S9)	W	30	2		B&V
	MAN	(S9)	W	34	2		B&V
F7A7	MAIN ENGINE 3 STATUS -- SHUTDOWN RIGHT	(XDS3)	R	32	2		B&V
	OUT OF LIMIT RIGHT	(XDS3)	Y	38	2		B&V
F8A5	LANDING GEAR -- ARM	(S1)	Y	36	2		B&V
	DOWN	(S2)	G	40	2		B&V
F4	ANTI-SKID FAIL (1)	(XD52)	Y	12	2		B&V

FOR DETAILED COMPONENT AND LOGIC INFORMATION REFER TO:

SSSH DWG NO.	SSSH DWG TITLE	VENDOR NAME	VENDOR DWG NO.	VENDOR SHEET NO.	REV	DATE	VENDOR DRAWING TITLE
4.1	INTERIOR FLOOD LIGHTING	R. I.	VS70-730139	1 OF 3	D	3/26/90	INTERIOR LIGHTING SUBSYSTEM
		R. I.	VS70-730209	1 OF 3	—	5/1/80	AIRLOCK MODULE LIGHTING SUBSYSTEM
		R. I.	VS75-733952	1 OF 2	B	1/17/79	PANEL AW18A - AIRLOCK PANEL NO. 1
		R. I.	VS70-730202	1 OF 3	F	5/1/80	AIRLOCK MODULE LIGHTING SUBSYSTEM
		R. I.	VS70-730142	1 OF 3	E	5/1/90	INTERIOR LIGHTING SUBSYSTEM
		R. I.	VS70-973102	44.1	F/G04	10/1/90	TUNNEL ADAPTER FLOOD LIGHTING
		R. I.	VS70-973099	44.1	A/B03	4/25/90	TUNNEL ADAPTER FLOOD LIGHTING
		JSC	JSC-18827	—	D	9/84	SPACELAB D&C PROCEDURAL NOMENCLATURE
		R. I.	VS70-973099	41	A/B03	4/25/90	INTERIOR LIGHTING CREW COMPARTMENT - PART 1
		R. I.	VS70-973099	42	A/B03	4/25/90	INTERIOR LIGHTING CREW COMPARTMENT - PART 11
		R. I.	VS70-973102	39	F/G04	10/1/90	INTERIOR LIGHTING CREW COMPARTMENT 1
		R. I.	VS70-973102	40	F/G04	10/1/90	INTERIOR LIGHTING CREW COMPARTMENT II
		R. I.	VS70-973102	44	F/G04	10/1/90	AIRLOCK ILLUMINATION
		R. I.	VS70-973099	44	A/B03	4/25/90	AIRLOCK ILLUMINATION
4.2 (SHEETS 1-2)	INST/NUMERIC/EDGE PANEL LIGHTING	R. I.	VS70-730239	1-6	A/BO3	4/25/90	EDGE LIGHTED PANELS
		R. I.	VS70-730229	1-2	B	9/02/82	INSTRUMENT/NUMERIC LIGHTING
		R. I.	VS70-730222	1-2	E	6/5/84	INSTRUMENT/NUMERIC LIGHTING
		R. I.	VS70-730232	1-6	D	10/8/79	INSTRUMENT/NUMERIC LIGHTING
		R. I.	ECN 104-25012A	33 OF 43		1/15/94	THE SHUTTLE/MIR DOCKING SYSTEM - ORBITER DOCKING SYSTEM (ODS)
4.3	ANNUNCIATOR LIGHTING	R. I.	VS70-730249	1-8	A	3/8/83	D&C ANNUNCIATOR SUBSYSTEM
		R. I.	VS70-730242	1-8	F	9/30/82	D&C ANNUNCIATOR SUBSYSTEM
		R. I.	VS70-973102	20-24, 30,31	F/G04	10/1/90	INTEGRATED SYSTEM SCHEMATIC - DISPLAYS AND CONTROLS OV-102
		R. I.	VS70-973099	20-24, 30,31	A/BO3	4/25/90	INTEGRATED SYSTEM SCHEMATIC - DISPLAYS AND CONTROLS OV-099, -103 AND -104
		AEROSPACE AVIONICS	SK500T90	N/A	APP	12/13/76	ANNUNCIATOR CONTROL ASSEMBLY
TABLE 4-I	ANNUNCIATOR CONTROL ASSEMBLY CHANNEL ASSIGNMENTS	R. I.	VS70-730249	1-8	A	3/8/83	D&C ANNUNCIATOR SUBSYSTEM
			VS70-730242	1-8	F	9/30/82	D&C ANNUNCIATOR SUBSYSTEM
			VS70-973102	20-24, 30, 31	F/G04	10/1/90	INTEGRATED SYSTEM SCHEMATIC DISPLAYS AND CONTROLS OV-102
			VS70-973099	20-24, 30, 31	A/BO3	4/25/90	INTEGRATED SYSTEM SCHEMATIC DISPLAYS AND CONTROLS OV-099, 103 AND 104

DWG	SIGNATURE	DATE	DWG	SIGNATURE	DATE
4.1	ENGR C. B. GUDERIAN		TBL 4-I	ENGR R. AL-AYOUBI	
	ENGR Carl B. Guderian	9/12/94		ENGR Rami Al-Ayoubi	9/22/94
4.2-1	ENGR C. B. GUDERIAN			ENGR	
	ENGR Carl B. Guderian	9/22/94		ENGR	
4.2-2	ENGR R. ARMSTRONG			APP Paul M Joyce	9/22/94
	ENGR R. Armstrong	9/22/94		APP	
4.3	ENGR R. AL-AYOUBI			APP	
	ENGR Rami Al-Ayoubi	9/22/94		LTR E PCN 4	

NATIONAL AERONAUTICS AND SPACE ADMINISTRATION
LYNDON B. JOHNSON SPACE CENTER HOUSTON, TEXAS

VENDOR DRAWING REFERENCES

SPACE SHUTTLE	TBL NO 4-II	
ALL	PAGE 4.II-1	SHEET 1 OF 2

BASIC REV E-4

FOR DETAILED COMPONENT AND LOGIC INFORMATION REFER TO:

SSSH DWG NO.	SSSH DWG TITLE	VENDOR NAME	VENDOR DWG NO.	VENDOR SHEET NO.	REV	DATE	VENDOR DRAWING TITLE
4.4	EXTERIOR LIGHTING	R. I.	VS70-730212	1 OF 2	E	3/3/82	MANIPULATOR ARM LIGHTING SUBSYSTEM
		R. I.	VS70-730162	1 OF 2	D	7/22/80	D&C EXTERIOR LIGHTING SUBSYSTEM
		R. I.	VS70-730219	1 OF 2	A	3/3/82	MANIPULATOR ARM LIGHTING SUBSYSTEM
		R. I.	VS70-973102	11	F/G04	10/1/90	ORBITER D&C PANEL CONFIG
		R. I.	VS70-973099	11	A/B03	4/25/90	ORBITER D&C PANEL CONFIG
		R. I.	MC4340062	21 & 22	A		FLODLIGHT ASSEMBLY-PAYLOAD BAY
		R. I.	MC4340066	10			FLOODLIGHT ASSEMBLY OVERHEAD DOCKING
		SPAR	RMS-M 1140-1-004				MANIPULATOR ARM OVERALL DIMENSIONS
		NSTS	07700 VOL. XIV	3-27, 28 8-36	I	SEPT, 1986	SPACE SHUTTLE SYSTEM PAYLOAD ACCOMODATIONS, LEVEL II PROGRAM DEFINITION AND REQUIREMENTS
		R. I.	VS70-973102	43	F/G04	10/1/90	D&C EXTERIOR LIGHTING
		R. I.	VS70-973102	46	F/G04	10/1/90	MANIPULATOR ARM LIGHTING
		R. I.	VS70-973099	43	A/B03	4/25/90	D&C EXTERIOR LIGHTING
		R. I.	VS70-973099	46	A/B03	4/25/90	MANIPULATOR ARM LIGHTING
4.5	ORBITER DOCKING SYSTEM AIRLOCK LIGHTS	R. I.	ECN 104-25012A	35, 36, 41 OF 43		1/15/94	THE SHUTTLE/MIR DOCKING SYSTEM - ORBITER DOCKING SYSTEM (ODS)
		NASA/NPOE	NASA/NPOE/ 000/4.02.02	4.02.02.1-6; 4.02.02.1-7		4/2/94	SHUTTLE/MIR PHYSICAL CHARACTERISTICS

DWG	SIGNATURE		DATE
4.4	ENGR	R. AL-AYOUBI	
	ENGR	Rami Al-Ayoubi	9/22/94
4.5	ENGR	R. ARMSTRONG	
	ENGR	Robt Armstrong	9/20/94
	APP	Paul M Joyce	9/22/94
	APP		
	APP		
	LTR E	PCN 4	

NATIONAL AERONAUTICS AND SPACE ADMINISTRATION
LYNDON B. JOHNSON SPACE CENTER HOUSTON, TEXAS

VENDOR DRAWING REFERENCES

SPACE SHUTTLE	TBL NO 4-II
ALL	
	PAGE 4.II-2 SHEET 2 OF 2

BASIC REV E-4

DATE: 08/05/90	NAME: MAG	VERSION: BPT: 11
DATE: 10/02/90	NAME: BJT	VERSION: BPT: 12
DATE: 10/22/90	NAME: BJT	VERSION: INK: 3

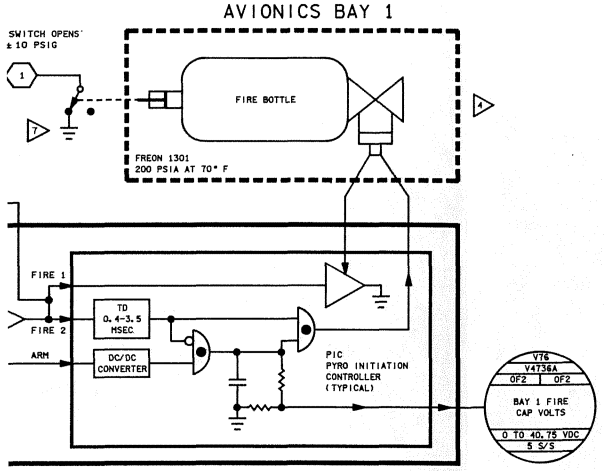

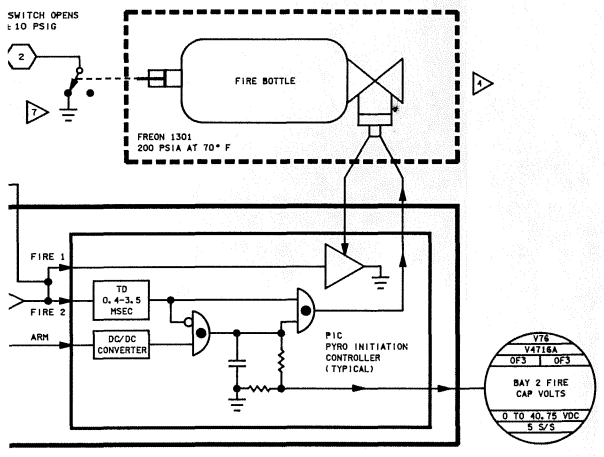

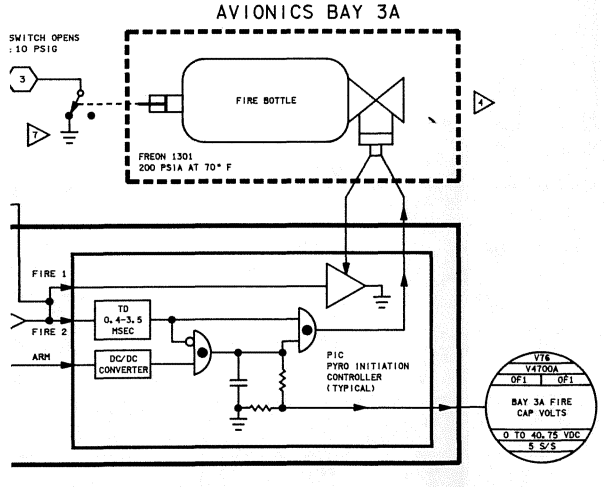

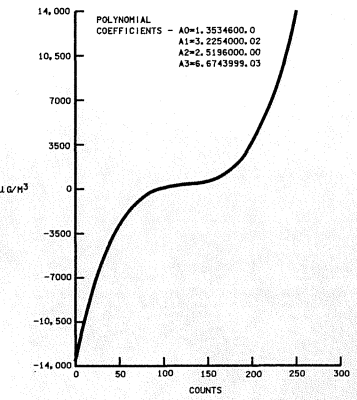

SMOKE DETECTOR CALIBRATION CURVE, MCC (TYPICAL)

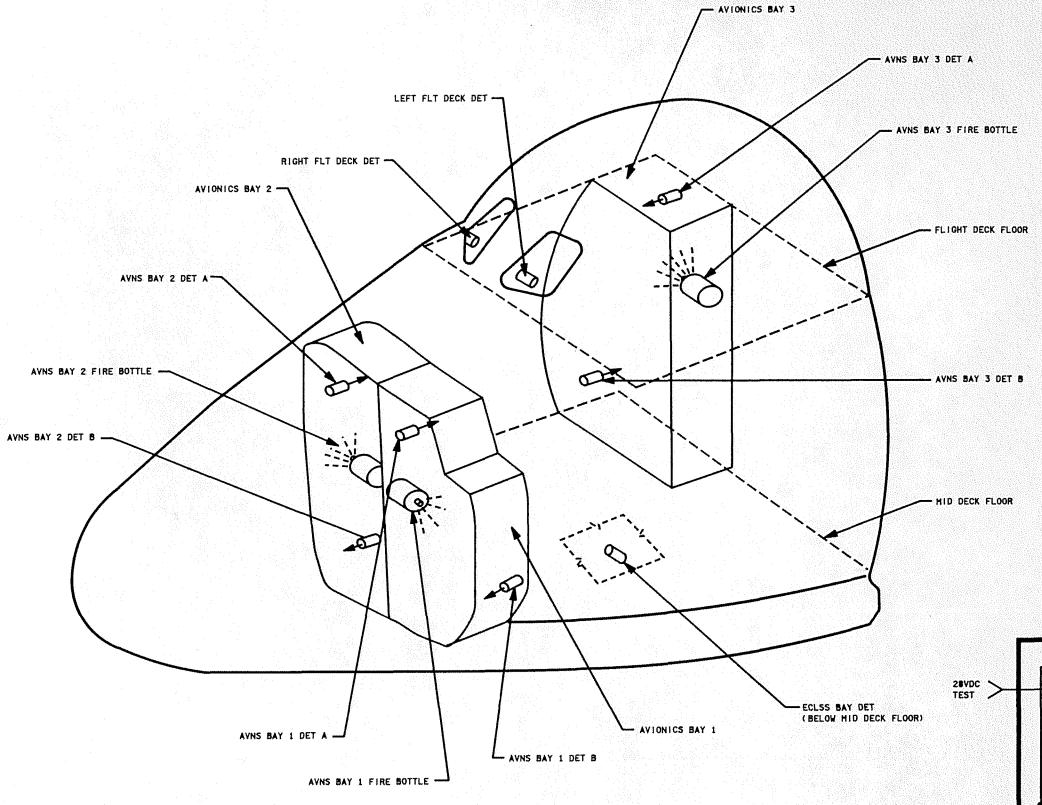

DETECTOR LOCATIONS

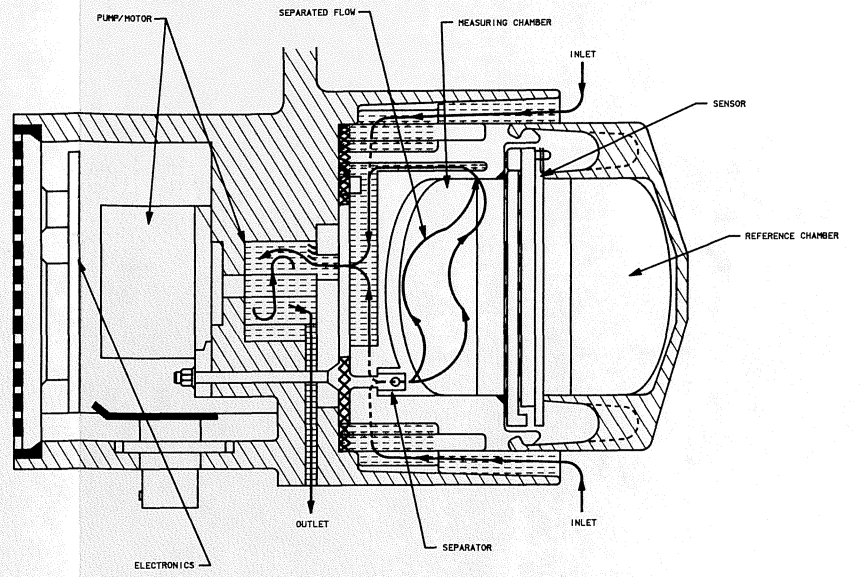

SMOKE DETECTOR

CABIN SMOKE DETECTORS, TIME TO ACTIVATE

SMOKE SOURCE		TIME TO ACTIVATE DETECTOR	
LOCATION	STRENGTH GM/MIN	CABIN FAN OUTLET (MIN)	FLIGHT DECK (MIN)
EQUIPMENT BAY	0.2	2.4	5.5
PASSENGER COMPARTMENT	0.2	0.3	1.8
FLIGHT DECK	0.2	*	0.2
EQUIPMENT BAY	0.5	1.8	3.5
PASSENGER COMPARTMENT	0.5	0.1	1.0
FLIGHT DECK	0.5	*	0.1
EQUIPMENT BAY	1.0	1.1	2.9
PASSENGER COMPARTMENT	1.0	0.06	0.8
FLIGHT DECK	1.0	*	0.05

* THE CABIN FAN CIRCULATES THE CABIN ATMOSPHERE EVERY SEVEN MINUTES

ON PANEL L1

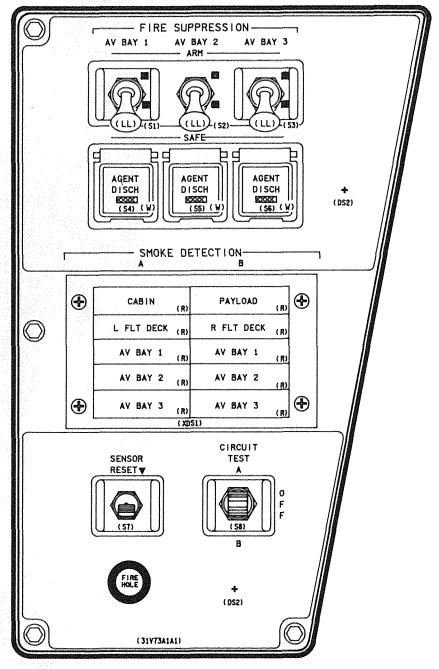

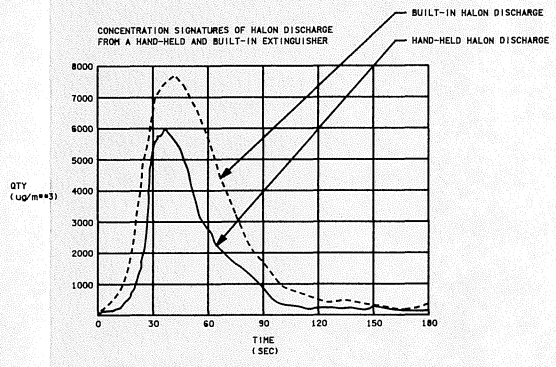

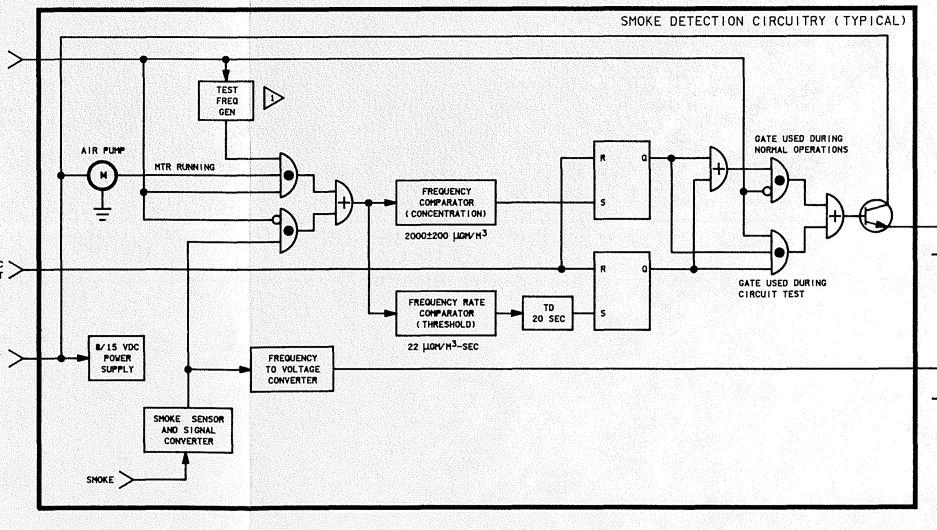

- THIS SIGNAL WILL NOT BE AVAILABLE FOR ACTUAL FIRE DURING CIRCUIT TEST SEQUENCE

- THIS MEASUREMENT AVAILABLE TO DETECT ACTUAL FIRE DURING CIRCUIT TEST SEQUENCE

1. WHEN THE HALON BOTTLE PRESSURE BECOMES LOWER THAN 60 ± 10 PSIG THE PRESSURE SWITCH OPENS REDIRECTING POWER FROM GROUND TO THE "BOTTLE EMPTY" TELEMETRY
2. ACA POWERED BY MNB 015 OR MNC 016 DEPENDING ON THE BUS SWITCH POSITION
3. SEE TABLE S-III FOR DRAWING REFERENCES
4. DISCHARGE WILL PRODUCE AN 8000 TO 9000 UG/M³ CONCENTRATION READOUT FROM HALON ALONE
5. OPTIONAL INPUT - DEPENDS ON PAYLOAD
6. A 6A FUSE LINK WITH THE TRIPPING CHARACTERISTICS OF A 3A FUSE

NOTES:

7. TEST FREQUENCY PROFILE INITIATED BY SELF-TEST INPUT SIMULATING A PARTICULATE CONCENTRATION ABOVE 2200 μGM/M³ INCREASING AT A RATE GREATER THAN 22 μGM/M³-SEC

1 SMOKE

SIGNATURE		DATE	NATIONAL AERONAUTICS AND SPACE ADMINISTRATION LYNDON B. JOHNSON SPACE CENTER HOUSTON, TEXAS
DSGN LAURIE BUCHANAN		5-14-79	
DR			
ENGR M. FITZPATRICK		8/27/90	SMOKE DETECTION AND FIRE SUPPRESSION
ENGR Michael F. Fitzpatrick		10/2/90	
APP Mack F. Tracy		10/2/90	
APP			SPACE SHUTTLE
OMNIPLAN S.K. Kimbrell		11-14-90	ALL
LTR E	PCN		126.5 X 34 - PAGE

DWG NO 5.1

SHEET 1 OF 1

BASIC REV E

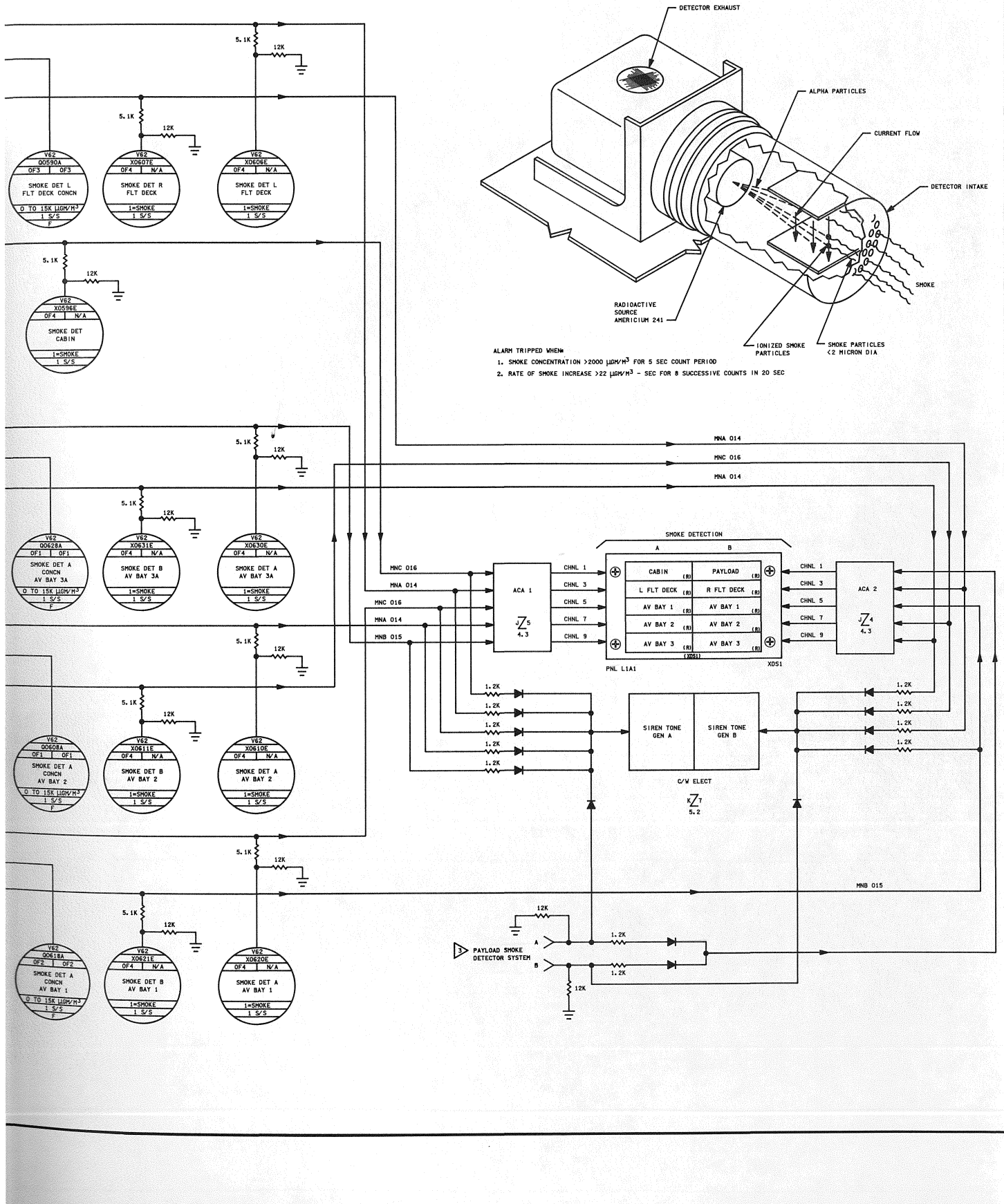

ALARM TRIPPED WHEN:

1. SMOKE CONCENTRATION >2000 µGM/M³ FOR 5 SEC COUNT PERIOD
2. RATE OF SMOKE INCREASE >22 µGM/M³ - SEC FOR 8 SUCCESSIVE COUNTS IN 20 SEC

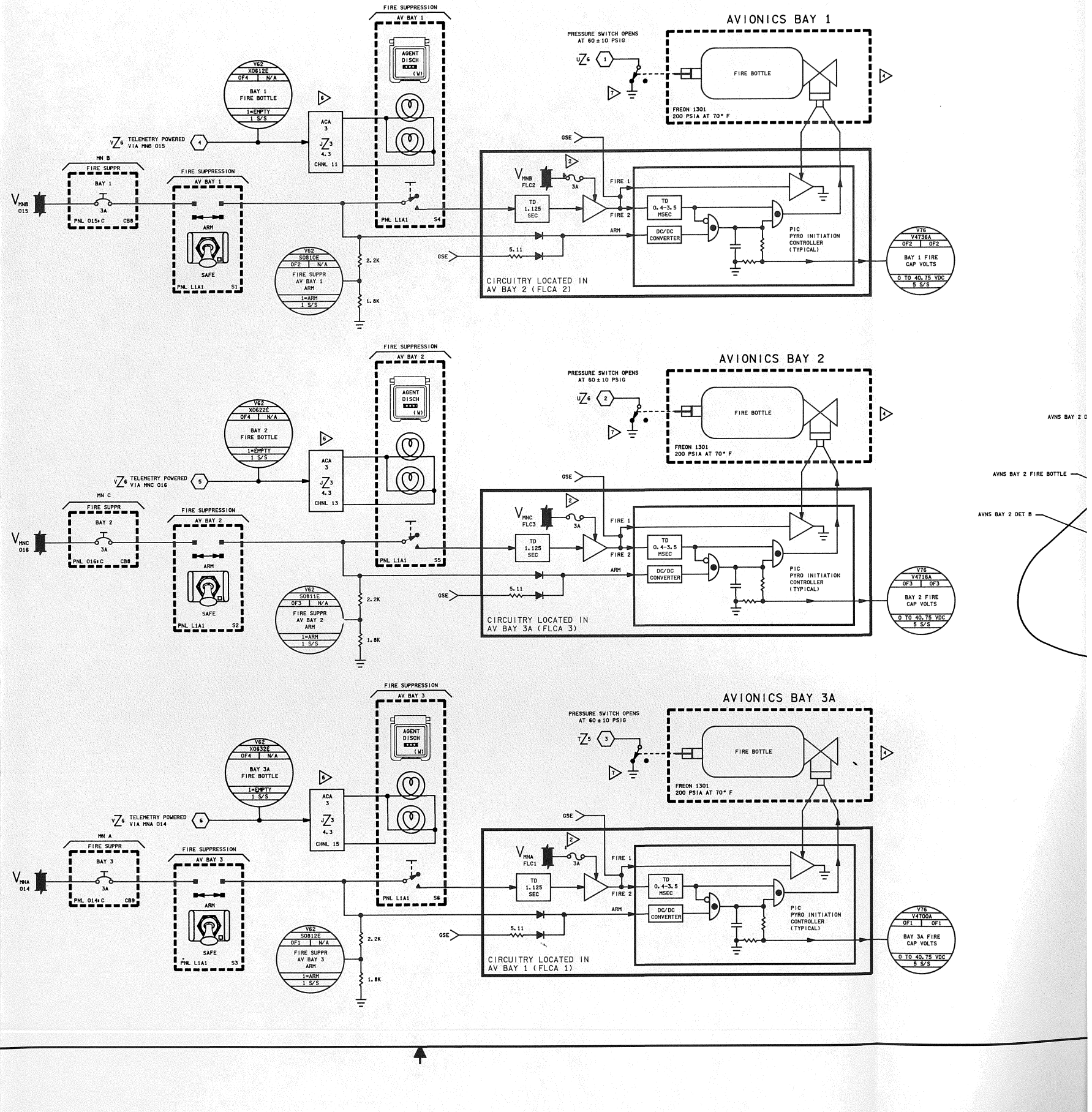

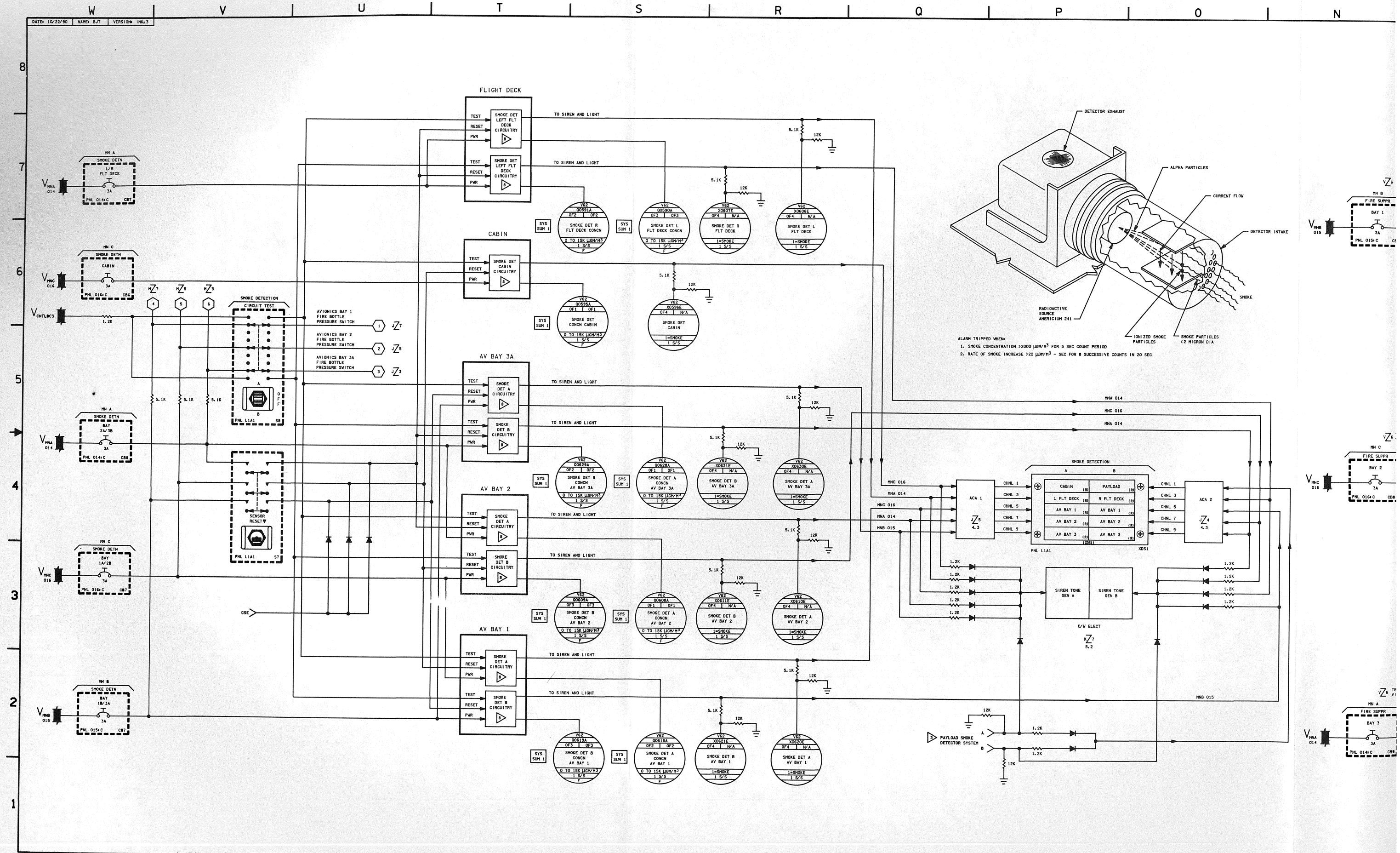
DATE: 10/22/90
NAME: BJT
VERSION: INK 3
FLIGHT DECK
CABIN
AV BAY 3A
AV BAY 2
AV BAY 1
SMOKE DETECTION
CIRCUIT TEST
SENSOR RESET
AVIONICS BAY 1 FIRE BOTTLE PRESSURE SWITCH
AVIONICS BAY 2 FIRE BOTTLE PRESSURE SWITCH
AVIONICS BAY 3A FIRE BOTTLE PRESSURE SWITCH
TO SIREN AND LIGHT
DETECTOR EXHAUST
ALPHA PARTICLES
CURRENT FLOW
DETECTOR INTAKE
SMOKE
RADIOACTIVE SOURCE AMERICIUM 241
IONIZED SMOKE PARTICLES
SMOKE PARTICLES <2 MICRON DIA
ALARM TRIPPED WHEN:
1. SMOKE CONCENTRATION >2000 µGM/M3 FOR 5 SEC COUNT PERIOD
2. RATE OF SMOKE INCREASE >22 µGM/M3 - SEC FOR 8 SUCCESSIVE COUNTS IN 20 SEC
ACA 1
ACA 2
SIREN TONE GEN A
SIREN TONE GEN B
C/W ELECT
PAYLOAD SMOKE DETECTOR SYSTEM
MNA 014
MNC 016
MNB 015

BASIC REV E

DATE	NAME	VERSION
DATE: 09/25/91	NAME: JMB	VERSION: BPT: 7
DATE: 10/10/91	NAME: JDF	VERSION: INR: 5
DATE: 09/01/93	NAME: VEM	VERSION: INR: 6

CAUTION/WARNING ELECTRONIC UNIT (CWE)
(83V73A4)

ALARM SYSTEM B

ALARM SYSTEM A

TONE GENERATOR B

TONE GENERATOR A

V61R2401A
1.43K
26.1K
TO ALARM SYSTEM A

CABIN ΔP/ΔT
SMOKE DETECTION SYSTEM B ALARM
FIRE/SMOKE B
SM TONE B
BU C/W B
SM TONE A
ESS2CA C/W B CB PWR

V72X4535Y PF 1 SM TONE B CMD 1
V72X4536Y PF 2 SM TONE B CMD 2
V72X4520X FF 1 SM TONE A CMD 1
V72X4521X FF 2 SM TONE A CMD 2
V72X4522X FF 3 SM TONE A CMD 3
V72X4523X FF 4 SM TONE A CMD 4
V72X4542Y PF 1 BU C/W B CMD 1
V72X4530Y FF 1 BU C/W A CMD 1
V72X4531Y FF 2 BU C/W A CMD 2
(150 - 500 MS PULSE)

22K, 10K, 10K, 10K, 22K, 10K

LATCHING DETECTOR
LATCHING FLIP-FLOP
DET
KLAXON
SIREN
SM TONE
C/W TONE
RESET PULSE
SELF TEST B
SYSTEM B POWER AND TIMING
SYSTEM B POWER SUPPLY
SYSTEM B TIMING
BU C/W B
BU C/W A
MASTER ALARM AND TONE RESET PULSE GENERATOR

PRI C/W MASTER ALARM TRIGGER
SYSTEM A POWER AND TIMING TO ALL PRIMARY C/W CIRCUITS
SYSTEM A MASTER ALARM
PRI C/W SELF TEST FAIL
SELF TEST A
SYSTEM A POWER AND TIMING
SYSTEM A TIMING
SYSTEM A POWER SUPPLY
RESET PULSE
MASTER ALARM AND TONE RESET PULSE GENERATOR

ESS 1BC C/W A CB PWR
BU C/W B CMD 2
BU C/W A CMD 3
BU C/W A CMD 4
(LATCHED TIL MSG RESET)
BU C/W A
SM TONE A
CABIN ΔP/ΔT
SMOKE DETECTION SYSTEM A ALARM
FIRE/SMOKE A

V72X4543Y PF2
V72X4532X FF3
V72X4533X FF4

38 ANNUNCIATOR LIGHT SIGNALS (38 LINES)

CAUTION/WARNING STATUS
LIMIT VOLTS
PARAMETER
00 – 11
PNL R13A1 XDS1
POWER AND TIMING
SERIAL DATA

ANNUNCIATOR LAMP TEST
LEFT
RIGHT
PNL 06 S14
PNL 08 S18
LAMP TEST LEFT
LAMP TEST RIGHT

O2 PRESS	H2 PRESS	FUEL CELL REAC (R)	FUEL CELL STACK TEMP	FUEL CELL PUMP
CABIN ATM (R)	O2 HEATER TEMP	MAIN BUS UNDERVOLT (R)	AC VOLTAGE	AC OVERLOAD
FREON LOOP	AV BAY/ CABIN AIR	IMU	FWD RCS (R)	RCS JET
H2O LOOP	RGA/ ACCEL	AIR DATA (R)	LEFT RCS (R)	RIGHT RCS (R)
———	LEFT RHC (R)	RIGHT/AFT RHC (R)	LEFT OMS (R)	RIGHT OMS (R)
PAYLOAD WARNING (R)	GPC	FCS (R) SATURATION	OMS KIT	OMS TVC (R)
PAYLOAD CAUTION	PRIMARY C/W	FCS CHANNEL	MPS (R)	———
BACKUP C/W ALARM (R)	APU TEMP	APU OVERSPEED	APU UNDERSPEED	HYD PRESS

PNL F7A2
POWER
BRIGHT
VARIABLE
BACKUP C/W ALARM AND PRIMARY C/W LIGHT SIGNALS

EMERGENCY TONE B
TONE B1
TONE B2
CAUTION/WARNING TONE VOLUME
PNL R13A1 R2
ACCU ALARM TONE B SIGNAL
MID DECK SPEAKER MIKE UNIT
SIG
RET
SLEEP STATION HEADSET CONNECTOR
PNL M052F J5
TO ACCU BYPASS TONE VOLUME CNTL, THEN TO MID DECK SMU ATU (M042F)

MASTER ALARM RESET (5 LINES)
LF 1
V73K1534N
GSE MASTER ALARM RESET
MASTER ALARM B GROUND SIGNAL
5.3V
28V POWER
MASTER ALARM A GROUND SIGNAL
V73 X1567E
MASTER ALARM
1=ALARM
50 S/S

MASTER ALARM (R)
RESET
PNL A7A1 S51
PNL M052J S3
PNL F4 S51
PNL F2 S1
PNL 06 S51

ACA4 CH32
ACA5 CH32
ACA1 CH36
ACA3 CH36
ACA3 CH32
ACA1 CH32
ACA1 CH33
ACA2 CH33

BACKUP C/W ALARM B
PNL 013 F3 1A
MASTER ALARM B RELAY
ESS 2CA
C/W B 5A
PNL 013 C CB9
V_{ESS2CA} 013&R15
PDIX501DE SPACELAB MASTER ALARM
ESS 1BC
C/W A 5A
PNL 013 A CB1
V_{ESS1BC} 013&R15
MASTER ALARM A RELAY
PNL 013 F2 1A
BACKUP C/W ALARM A

CAUTION/WARNING MODE
ACK
NORM
ASCENT
PNL C3A5 S7

ANNUNCIATOR INTENSITY
BRIGHT
VAR
LOW
MED

TONE A1
TONE A2
CAUTION/WARNING TONE VOLUME
PNL R13A1 R1
ACCU ALARM TONE A SIGNAL
EMERGENCY TONE A
FLIGHT DECK SPEAKER MIKE UNIT

NOTES:
1. WHEN SAMPLED PARAMETER IS WITHIN LIMITS, THE DIFFERENTIAL AMPLIFIER OUTPUTS A "ZERO" DURING LOW LIMIT TEST AND A "ONE" DURING HIGH LIMIT TEST
2. SEE DRAWING 4.3 FOR LAMP TEST AND BRIGHTNESS CONTROL FOR EACH ACA CHANNEL
3. REFERENCE TABLE 5-I FOR C/W INPUT PARAMETER VS PANEL F7 DISPLAY LIGHT LISTING. TABLE 5-I ALSO LISTS INPUT PARAMETER ALARM LIMIT VALUES
4. SEE TABLE 5-III FOR DRAWING REFERENCES
5. ON OV-102 UPPER BULB IS B INPUT, LOWER BULB IS A ON PNL M052J

2 C/W OV 1

SIGNATURE		DATE	
DSGN	F. COIRO	2/21/78	NATIONAL AERONAUTICS AND SPACE ADMINISTRATION LYNDON B. JOHNSON SPACE CENTER HOUSTON, TEXAS
DR	L. BUCHANAN	5/21/78	
ENGR	B. PAWLIK		CAUTION/WARNING OVERVIEW
ENGR	Bryan Pawlik	9/6/93	
APP	James E. Lantz	9/14/93	
APP			SPACE SHUTTLE / DWG NO 5.2
CADS	S.K. Himeneo	10-5-93	ALL / PAGE / SHEET 1 OF 2
LTR E	PCN 3		104.5 X 34

BASIC REV E-3

DATE: 09/01/93 | NAME: VEM | VERSION: INK 6

S R O P O N M L K J I

8 7 6 5 4 3 2 1

CAUTION/WARNING
PARAMETER SELECT
0 1 0 1 2 3 4 5 6 7 8 9 0 1 2 3 4 5 6 7 8 9
DECIMAL TO BCD
PNL R13A1 S4

CAUTION/WARNING
PARAM ENABLE
INHIBIT
PNL R13A1 S5

CAUTION/WARNING
LIMIT SET
VALUE
X X X
VOLTS
0 1 2 3 4 5 0 1 2 3 4 5 6 7 8 9 0 5
DECIMAL TO BCD
PNL R13A1 S6

CAUTION/WARNING
LIMIT SET
LIMIT UPPER
LOWER
PNL R13A1 S7

CAUTION/WARNING
LIMIT SET
FUNC
SET
READ
PNL R13A1 S8

CAUTION/WARNING
MEMORY
READ
CLEAR
PNL C3A5 S6

CAUTION/WARNING
MEMORY
READ
CLEAR
PNL R13A1 S2
PARAM STATUS
TRIPPED
INHIBITED
PNL R13A1 S1
LAMP TEST
LEFT
RIGHT
PNL R13A1 S3

3

120 INPUT PARAMETERS

DWG	SHORT TITLE	(ZONE)
2.2-1	MN DC DIST	(D1)
2.3	AC	(F3, F4)
3.2-1	O_2 CRYO	(P4, E2)
3.3-1	H_2 CRYO	(N5)
3.4-1	FUEL CELL	(T5, V4, V8)
6.1-1	PCS	(C5)
6.2	ARS AIR	(D4)
7.1	1 ATCS	(E3)
7.4	ARS H_2O	(P7)
8.1	GPC I/O	(K3)
* 9.8	RGA/SIG	(C2)
* 9.11	ASA SIG	(A7)
* 9.13	OMS TVC&DR	(B7)
* 9.17	CNTLRS	(B8)
10.8	MPS HE	(C2)
10.11	LO_2	(P6)
10.12	LH_2	(P6)
11.3-2	OMS PROP	(U1, U2)
11.5-1	AFT RCS 1	(U1, U2)
11.6-1	FWD RCS 1	(U2)
* 11.10-3	RCS SIG	(A8)
12.1-2	APU	(D3, I4)
12.3-1	HYD PWR	(I4)
*	VIA DPS MDM FF1, FF3, PF2	

PRIMARY C/W

ENABLE
SIG DET
INHIBIT
LOAD DATA
DATA IN
INHIBIT MEMORY
DATA OUT
CLEAR
INVALID PARAMETER DETECTOR
>119
BCD TO BINARY
PARAMETER SELECT
DATA BIT 8
HIGH LIMIT TEST
SELF TEST LIMIT CONTROL (PARAM 120-127)
CWLM PROM
DATA BITS 1-7
UPPER LIMIT
CLEAR
DATA IN
LIMIT VALUE RAM
DATA OUT BIT 8
DATA OUT BITS 1-7
DIGITAL TO ANALOG
LIMIT VALUE
DIFF AMPL
OUT-OF-LIMIT COUNT CONTROL
DATA OUT
DATA IN
COUNT OVERFLOW MEMORY (SET IF COUNT=8, RESET IF COUNT=0)
DATA OUT
INHIBIT
LOAD DATA AND SET BIT 8
LIMIT VALUE (7 BITS)
COUNT MEMORY
SET
READ
000
119
120
127
128 PARAM MUX
PARAMETER DATA (80 S/S)
8 SELF TEST PARAMETERS
READ
CLEAR
TRIPPED
INHIBITED
LIMIT VALUE STORE AND ENCODE
LIMIT VALUE DATA
C/W STATUS ENABLE
LEFT
RIGHT
LAMP TEST DATA GENERATOR
SYSTEM A MASTER ALARM
DATA IN
RECALL MEMORY
DATA OUT
CLEAR
MASTER ALARM TRIGGER MEMORY
DATA OUT
DATA IN
POWER UP RESET PULSE GENERATOR
SYSTEM A POWER AND TIMING TO ALL PRIMARY C/W CIRCUITS
PRI C/W MA
PRI C/W SEL
SYSTEM A MA
PARAMETERS 120-127 ALARM INHIBIT
PRIMARY C/W PARAM SELF TEST
SELF TEST FAIL
PRIMARY C/W SELF TEST PARAMETERS STATUS
LAMP SET
LAMP RESET
ANNUNCIATOR COMBINATION AND OUTPUT DRIVE
ANNUNCIATOR SELECT DATA
COMBINATION PROM
38 ANNUNCIATOR LIGHT SIGNALS (38 LINES)
CAUTION/WARNING
STATUS
LIMIT VOLTS
X X X
0 1 2 3 4 5 6 7 8 9
PARAMETER
00 – 11
POWER AND TIMING
SERIAL DATA
PNL R13A1 XDS1

V72X4539Y PF 1 SM LIGHT B CMD 1
V72X4540Y PF 2 SM LIGHT B CMD 2
V72X4526X FF 1 SM LIGHT A CMD 1
V72X4527X FF 2 SM LIGHT A CMD 2
V72X4528X FF 3 SM LIGHT A CMD 3
V72X4529X FF 4 SM LIGHT A CMD 4
1.5K 1.5K
ACA 2 CH 29
ACA 3 CH 29
2
SM ALERT (B)
PNL F7 XDS1

V61R2401A
1.43K
26.1K
9
TO ALARM SYSTEM A
1.43K
26.1K
SMOKE SYSTEM

V72X4535Y PF 1 SM TONE B CMD 1
V72X4536Y PF 2 SM TONE B CMD 2
V72X4520X FF 1 SM TONE A CMD 1
V72X4521X FF 2 SM TONE A CMD 2
V72X4522X FF 3 SM TONE A CMD 3
V72X4523X FF 4 SM TONE A CMD 4
22K
10K
22K
10K

V72X4542Y PF 1 BU C/W B CMD 1
V72X4530Y FF 1 BU C/W A CMD 1
V72X4531Y FF 2 BU C/W A CMD 2
(150 - 500 MS PULSE)

V72X4543Y PF2 BU C/W B CMD 2
V72X4532X FF3 BU C/W A CMD 3
V72X4533X FF4 BU C/W A CMD 4
(LATCHED TIL MSG RE

BASIC REV E-3

DATE: 09/01/93 | NAME: VEM | VERSION#: INK, 6

S R O P O N M L

8 7 6 5 4 3 2 1

CAUTION/WARNING
PARAMETER SELECT
0 1 0 1 2 3 4 5 6 7 8 9 0 1 2 3 4 5 6 7 8 9
DECIMAL TO BCD
PNL R13A1 S4

CAUTION/WARNING
PARAM ENABLE
INHIBIT
PNL R13A1 S9

CAUTION/WARNING
LIMIT SET
VALUE
X X X
VOLTS
LOWER
UPPER
0 1 2 3 4 5 0 1 2 3 4 5 6 7 8 9 0 5
DECIMAL TO BCD
PNL R13A1 S6

CAUTION/WARNING
LIMIT SET
LIMIT
UPPER
LOWER
PNL R13A1 S7

CAUTION/WARNING
LIMIT SET
FUNC
SET
READ
PNL R13A1 S8

CAUTION/WARNING
MEMORY
READ
CLEAR
PNL C3A5 S6

CAUTION/WARNING
MEMORY
READ
CLEAR
PNL R13A1 S2

PARAM STATUS
TRIPPED
INHIBITED
PNL R13A1 S1

LAMP TEST
LEFT
RIGHT
PNL R13A1 S3

3

120 INPUT PARAMETERS

OWS	SHORT TITLE	(ZONE)
2, 2-1	MN DC DIST	(D1)
2, 3	AC	(F3, F4)
3, 2-1	O_2 CRYO	(P4, E2)
3, 3-1	H_2 CRYO	(N5)
3, 4-1	FUEL CELL	(T5, V4, V8)
6, 1-1	PCS	(C5)
6, 2	ARS AIR	(D4)
7, 1	1 ATCS	(E3)
7, 4	ARS H_2O	(P7)
8, 1	GPC I/O	(K3)
* 9, 8	RGA/SIG	(C2)
* 9, 11	ASA SIG	(A7)
* 9, 13	OMS TVC&OR	(B7)
* 9, 17	CNTLRS	(B8)
10, 8	MPS HE	(C2)
10, 11	LO_2	(P6)
10, 12	LH_2	(P6)
11, 3-2	OMS PROP	(U1, U2)
11, 5-1	AFT RCS 1	(U1, U2)
11, 6-1	FWD RCS 1	(U2)
* 11, 10-3	RCS SIG	(A8)
12, 1-2	APU	(D3, I4)
12, 3-1	HYD PWR	(I4)

* VIA DPS MDM FF1, FF3, PF2

PRIMARY C/W

SIG DET (ENABLE, INHIBIT)
LOAD DATA
DATA IN
INHIBIT MEMORY (DATA OUT, CLEAR)
INVALID PARAMETER DETECTOR (>119)
BCD TO BINARY
PARAMETER SELECT
DATA BIT 8
HIGH LIMIT TEST
SELF TEST LIMIT CONTROL (PARAM 120-127)
CWLM PROM
DATA BITS 1-7
SIG DET (UPPER LIMIT)
CLEAR
BCD TO BINARY (DATA IN)
LIMIT VALUE RAM (DATA OUT BIT 8, DATA OUT BITS 1-7)
LOAD DATA AND SET BIT 8
LIMIT VALUE (7 BITS)
DIGITAL TO ANALOG
LIMIT VALUE
DIFF AMPL
OUT-OF-LIMIT COUNT CONTROL (DATA OUT, DATA IN)
COUNT MEMORY
COUNT OVERFLOW MEMORY (SET IF COUNT=8, RESET IF COUNT=0)
INHIBIT
SIG DET (SET, READ)
000 ... 119
120 ... 127
128 PARAM MUX
PARAMETER DATA (80 S/S)
8 SELF TEST PARAMETERS
SYSTEM A MASTER ALARM
MASTER ALARM TRIGGER MEMORY
RECALL MEMORY
CLEAR
SIG DET (READ, CLEAR)
SIG DET (READ, CLEAR)
SIG DET (TRIPPED, INHIBITED)
LIMIT VALUE STORE AND ENCODE
LIMIT VALUE DATA
LAMP SET
LAMP RESET
ANNUNCIATOR COMBINATION AND OUTPUT DRIVE
ANNUNCIATOR SELECT DATA
COMBINATION PROM
C/W STATUS ENABLE
SIG DET (LEFT, RIGHT)
LAMP TEST DATA GENERATOR

V72X4539Y PF 1 SM LIGHT B CMD 1
V72X4540Y PF 2 SM LIGHT B CMD 2
V72X4526X FF 1 SM LIGHT A CMD 1
V72X4527X FF 2 SM LIGHT A CMD 2
V72X4528X FF 3 SM LIGHT A CMD 3
V72X4529X FF 4 SM LIGHT A CMD 4

1.5K

PRIMARY C/W PARAM SELF TEST

BASIC REV E-3

DATE: 08/22/90	NAME: BJT	VERSION INK: 4
DATE: 09/27/91	NAME: JDF	VERSION BPT: 7
DATE: 10/10/91	NAME: JDF	VERSION INK: 5

MASTER ALARM TONE LOGIC B

MASTER ALARM TONE LOGIC A

TIMING TO TONE GENERATORS, PULSE GENERATORS, SELF TEST AND TIME DELAY CIRCUITS

KLAXON

KLAXON TONE GEN

EMERG ENABLE

SIREN

SIREN TONE GEN

SM TONE GEN

C/W TONE ENABLE

C/W TONE GEN

PRI C/W

PRI C/W TRIGGER

BU C/W TONE

BU C/W LIGHT

SW TONE

ST FAIL 1

ST FAIL 2

0.1 SEC TD

TURN ON 0.1 SEC TD

TURN OFF 0.1 SEC TD

ENABLE

TONE

TONE AMPL 1 (300Ω)

TONE AMPL 2 (300Ω)

FILTER AND THRESHOLD DET

MASTER ALARM RESET (MAR) PULSE GEN (≈200 μ SEC)

CROSSOVER MAR PULSE GENERATOR

RESET PULSE

MAR PULSE

PWR READY

PWR TO LOGIC CKTS 5VDC

-15VDC

-15VDC

5.3VDC

GND SIG

MASTER ALARM

MASTER ALARM B RELAY SIG

MASTER ALARM A RELAY SIG

NO CONN

MA TLM ENABLE

EMERGENCY TONE B 91 MID DECK SPKR MIKE UNIT

EMERGENCY TONE A 90 FLT DECK SPKR MIKE UNIT

TONE B1

TONE A1

TONE B2

TONE A2

REMOTE MAR

MAR A1

MAR A2

MAR B1

MAR B2

LF 1

V73K1539N

RETURN 10S

SIGNAL 10S

TO ACCU BYPASS TONE VOLUME CNTL, THEN TO MIDDECK SMU ATU (MO429)

CAUTION/WARNING TONE VOLUME B

PNL R13A1 R1 R2

ACCU ALARM TONES 16.11-1

SLEEP STATION HEADSET CONNECTOR PNL M058F J5

SIG RET

CAUTION/WARNING MODE ACK NORM ASCENT

PNL C3A5 S7

ANNUNCIATOR INTENSITY LOW MED

PNL 06 R2-1

ANNUNCIATOR INTENSITY BRIGHT VAR

PNL 06 S51

ACA 2 CH 33

ACA 1 CH 33

ACA 1 CH 32

ACA 3 CH 32

ACA 3 CH 36

ACA 1 CH 36

ACA 5 CH 32

ACA 4 CH 32

MASTER ALARM (R) LOWER UPPER

PNL F2 S1

PNL F4 S1

PNL M052J S3

PNL A7A1 S51

MAR A1

MAR B1

MAR B2

MAR A2

V73X1567E OF3 N/A MASTER ALARM 1=ALARM 50 5/3

ISOLATION CIRCUIT

5V (ISOL)

405.6 KHZ

SYS A TIMING

SYS B TIMING (4.096 MHZ OSC AND COUNTERS)

TO SELF TEST CIRCUIT

POWER TO ANALOG MULTIPLEXER GATES, ANALOG AMPLIFIERS, COMPARATOR AND REF VOLTAGE GEN

NOT USED

PS B 15V

PS A 15V

PS B -15V

PS A -15V

PWR RDY B

PWR RDY A

PS B 5V

PS A 5V

POWER SUPPLY B

POWER SUPPLY A

DC TO DC CONVERTER

15V

-15V

5.3V

5V

12V

5V (ISOL)

U/V DET

O/V DET

<4.5V

>5.5V

>4.5 AMPS

PS SHUTDOWN

OVERCURRENT DETECTOR

FILTER

PWR

POWER UP STROBE PUS

CLEARS ALL STORAGE REGISTERS, MEMORIES AND TRIGGERS PRIMARY C/W MASTER ALARM

SINGLE PULSE GENERATOR (400 M SEC)

ENABLE

POWER TO ALL LOGIC AND MEMORY CIRCUIT

TO SYS A TIMING

TO STATUS DISPLAY 7.49VDC REG

ESS 2CA C/W B 5A CB9 PNL 013C

V_{ESS2CA} 0136R15

ESS 1BC C/W A 5A CB1 PNL 013A

V_{ESS1BC} 0136R15

K1B K1A

P01XS010E PAYLOAD MASTER ALARM

PNL 013 F3 1A BU C/W B

PNL 013 F2 1A BU C/W A

MASTER ALARM B LAMP SIG

MASTER ALARM A LAMP SIG

MAX/PHASE SHIFT CMD

PHASE SHIFT CNTL

PHASE SHIFT MODULATOR

CNTL SQ WAVE AC

REF SQ WAVE AC

6.5VDC LAMP PWR

6.5VDC LOGIC PWR

THRESHOLD REF

POWER SUPPLY

CAUTION/WARNING ANNUNCIATOR PANEL (F7)

			NO	TITLE
1A	YELLOW	O_2 PRESS	0	O_2 TK 1 PRESS
			10	O_2 TK 2 PRESS
			20	O_2 TK 3 PRESS
			30	O_2 TK 4 PRESS
			40	O_2 TK 5 PRESS
2A	RED	CABIN ATM	4	CABIN PRESS
			14	SYS 1 O_2 FLOW
			24	SYS 2 O_2 FLOW
			34	O_2 PP A
			44	O_2 PP B
			54	SYS 1 GN_2 FLOW
			64	SYS 2 GN_2 FLOW
3A	YELLOW	FREON LOOP	106	FCL 1 FLOW
			107	FCL 1 EVAP OUT TEMP
			116	FCL 2 FLOW
			117	FCL 2 EVAP OUT TEMP
4A	YELLOW	H_2O LOOP	105	LOOP 1 H_2O PUMP PRESS
			115	LOOP 2 H_2O PUMP PRESS
5A	YELLOW	———	113	SPARE
6A	RED	PAYLOAD WARNING	55	P/L WARNING 1
			65	P/L WARNING 2
			75	P/L WARNING 3
			85	P/L WARNING 4
			95	P/L WARNING 5
7A	YELLOW	PAYLOAD CAUTION	97	P/L CAUTION
8A	RED	BACKUP C/W ALARM		BACKUP C/W A BACKUP C/W B

			NO	TITLE
1B	YELLOW	H_2 PRESS	50	H_2 TK 1 PRESS
			60	H_2 TK 2 PRESS
			70	H_2 TK 3 PRESS
			80	H_2 TK 4 PRESS
			90	H_2 TK 5 PRESS
2B	YELLOW	O_2 HEATER TEMP	1	O_2 TK 1 HTR 1 TEMP
			11	O_2 TK 1 HTR 2 TEMP
			21	O_2 TK 2 HTR 1 TEMP
			31	O_2 TK 2 HTR 2 TEMP
			41	O_2 TK 3 HTR 1 TEMP
			51	O_2 TK 3 HTR 2 TEMP
			61	O_2 TK 4 HTR 1 TEMP
			71	O_2 TK 4 HTR 2 TEMP
			81	O_2 TK 5 HTR 1 TEMP
3B	YELLOW	AV BAY/ CABIN AIR	74	CABIN FAN ΔP
			84	AV BAY 1 OUT AIR TEMP
			94	AV BAY 2 OUT AIR TEMP
			104	AV BAY 3 OUT AIR TEMP
			114	CABIN HX AIR OUT TEMP
4B	YELLOW	RGA/ACCEL	93	RGA/ACCEL FAIL
5B	RED	LEFT RHC	100	LEFT RHC FAIL
6B	YELLOW	GPC	5	GPC 1 FAIL
			15	GPC 2 FAIL
			25	GPC 3 FAIL
			35	GPC 4 FAIL
			45	GPC 5 FAIL
7B	YELLOW	PRIMARY C/W		CWE SELF TEST FAIL
8B	YELLOW	APU TEMP	8	APU 1 EGT
			18	APU 2 EGT
			28	APU 3 EGT
			38	APU 1 LUBE OIL TEMP
			48	APU 2 LUBE OIL TEMP
			58	APU 3 LUBE OIL TEMP

			NO	TITLE
1C	RED	FUEL CELL REAC	2	FC 1 O_2 VLV CLOSED
			12	FC 1 H_2 VLV CLOSED
			22	FC 2 O_2 VLV CLOSED
			32	FC 2 H_2 VLV CLOSED
			42	FC 3 O_2 VLV CLOSED
			52	FC 3 H_2 VLV CLOSED
2C	RED	MAIN BUS UNDERVOLT	3	MAIN A BUS U/V
			13	MAIN B BUS U/V
			23	MAIN C BUS U/V
3C	YELLOW	IMU	103	IMU FAIL
4C	RED	AIR DATA	91	NAV SENSOR FAIL
5C	RED	RIGHT/AFT RHC	110	RIGHT/AFT RHC FAIL
6C	RED	FCS SATURATION	101	FCS SATURATION
7C	YELLOW	FCS CHANNEL	111	FCS CHAN BYPASS/FAIL
8C	YELLOW	APU OVERSPEED	68	APU 1 OVERSPEED
			78	APU 2 OVERSPEED
			88	APU 3 OVERSPEED

			NO	TITLE
1D	YELLOW	FUEL CELL STACK TEMP	62	FC 1 STACK TEMP
			72	FC 2 STACK TEMP
			82	FC 3 STACK TEMP
2D	YELLOW	AC VOLTAGE	33	AC 1 BUS O/V-U/V
			43	AC 2 BUS O/V-U/V
			53	AC 3 BUS O/V-U/V
3D	RED	FWD RCS	6	RCS-F OX TK ULL P
			16	RCS-F FU TK ULL P
			26	RCS-F LEAK/TK P
4D	RED	LEFT RCS	36	RCS-L OX TK ULL P
			46	RCS-L FU TK ULL P
			56	RCS-L LEAK/TK P
5D	RED	LEFT OMS	7	OMS-L OX TK ULL P
			17	OMS-L FU TK ULL P
			27	OMS-L ENG ABNORM
6D	YELLOW	OMS KIT	77	OMS PBK OX TK ULL P
			87	OMS PBK FU TK ULL P
7D	RED	MPS	9	MPS-C ENG He TK PRESS
			19	MPS-L ENG He TK PRESS
			29	MPS-R ENG He TK PRESS
			39	MPS-C ENG He REG PRESS
			49	MPS-L ENG He REG PRESS
			59	MPS-R ENG He REG PRESS
			69	MPS-LO_2 ENG MANF PRESS
			79	MPS-LH_2 ENG MANF PRESS
8D	YELLOW	APU UNDERSPEED	98	APU 1 UNDERSPEED
			108	APU 2 UNDERSPEED
			118	APU 3 UNDERSPEED

			NO	TITLE
1E	YELLOW	FUEL CELL PUMP	92	FC 1 PUMP ΔP LOW
			102	FC 2 PUMP ΔP LOW
			112	FC 3 PUMP ΔP LOW
2E	YELLOW	AC OVERLOAD	63	AC 1 BUS OVERLOAD
			73	AC 2 BUS OVERLOAD
			83	AC 3 BUS OVERLOAD
3E	YELLOW	RCS JET	96	RCS JET FAIL
4E	RED	RIGHT RCS	66	RCS-R OX TK ULL P
			76	RCS-R FU TK ULL P
			86	RCS-R LEAK/TK P
5E	RED	RIGHT OMS	37	OMS-R OX TK ULL P
			47	OMS-R FU TK ULL P
			57	OMS-R ENG ABNORM
6E	RED	OMS TVC	67	OMS TVC FAIL
7E	YELLOW	———	89	SPARE
8E	YELLOW	HYD PRESS	99	HYD SYS 1 PRESS
			109	HYD SYS 2 PRESS
			119	HYD SYS 3 PRESS

CAUTION/WARNING STATUS DISPLAY (PANEL R13A1)

GATED 409.6 KHZ

RECIRCULATE DATA

DATA IN

CLOCK

DATA STORAGE SHIFT REGISTER (128 BITS)

DO

CLR

COLUMN SHIFT REGISTER

LOAD

COLUMN STORAGE REGISTER AND GROUND DRIVERS

0 1 2 3 4 5 6 7 8 9

DECODE COUNTER CT=10 CT=9 RESET

ROW DATA

ROW SHIFT REGISTER AND VOLTAGE DRIVERS

SHIFT CLOCK

CT-109

XDS1

ANNUNCIATOR LAMP TEST LEFT RIGHT

PNL 06 S14

PNL 08 S18

ANNUNCIATOR

OSC A FAIL

OSC B FAIL

NO CONN

PRIMARY C/W

PRIMARY C/W (TB)

BKUP C/W

3K

10K

BACKUP C/W ALARM (8A)

2 LINES

ATOR DATA

AND FF CLOCK PULSE

MBINATION MEMORY

IT, 128 PARAM) (PROM)

READ T8

ANNUNCIATOR SELECT MATRIX

SELF TEST

1A THRU 7A (7 LINES)

1B THRU 6B (6 LINES)

8B

1C THRU 8C (8 LINES)

1D THRU 8D (8 LINES)

1E THRU 8E (8 LINES)

38 ANNUNCIATOR SIGNAL LINES

TYPICAL C/WE ANNUNCIATOR OUTPUT CIRCUIT (1 OF 38)

PUS

1. OV-105 ONLY
2. ON OV-102, A INPUT IS LOWER BULB, B UPPER BULB ON PNL M052J
12. SEE TABLE 5-III FOR DRAWING REFERENCES
11. THUMBWHEELS USE SAME GROUND WIRE. LIFTING GROUND WILL SELECT PARAMETER 000 AND LIMIT SET VALUE 0.00
10. FLIGHT VARIABLE MEASUREMENT. UNUSED INPUTS ARE SHORTED.
9. TYPICAL MASTER ALARM INDICATOR CIRCUIT AND ANNUNCIATOR CONTROL ASSEMBLY (ACA) DRIVER CIRCUIT. SEE DWG 4.3 FOR LAMP TEST AND BRIGHTNESS CONTROL FOR EACH ACA AND CHANNEL

INPUT SIGNAL

ACA NO CHANNEL NO

MASTER ALARM UPPER LOWER

8. TYPICAL C/W ANNUNCIATOR LAMP CIRCUIT

6.5 VDC LAMP PWR

REF SQ WAVE AC

CONTROL SQ WAVE AC

POWER AND CONTROL

LAMP TEST L S

6.5 VDC LOGIC PWR

THRESHOLD REF (2.3 VDC)

7. MULTIPLEXER COMPARATOR TRIP POINT VARIATION (35 TO 120° F)
   SPEC = ±30 MILLIVOLTS
   TEST = ±10 MILLIVOLTS
6. ABBREVIATIONS AND ACRONYMS

ACA - ANNUNCIATOR CONTROL ASSEMBLY	MUX - MULTIPLEXER
ACK - ACKNOWLEDGE	NI OLI - NOT INHIBITED OUT OF LIMIT INDICATION
BU - BACKUP	OLI - OUT OF LIMIT INDICATION
CT - COUNT	O/V - OVERVOLT
CWE - CAUTION/WARNING ELECTRONICS	PROM - PROGRAMMABLE READ ONLY MEMORY
CWS - CAUT/WARNING STATUS	PS - POWER SUPPLY
DET - DETECTION	RAM - RANDOM ACCESS MEMORY
DI - DATA IN	R/W - READ/WRITE
DO - DATA OUT	ST - SELF TEST
FF - FLIP FLOP (MULTIBRATOR)	U/V - UNDERVOLT
MA - MASTER ALARM	
MAR - MASTER ALARM RESET	

5. SELF TEST PARAMETERS 1 THRU 4 ARE LOW LIMIT TESTED AT 0.10 VOLT BELOW PARAMETER VALUE. SELF TEST PARAMETERS 5 THRU 8 ARE HIGH LIMIT TESTED AT 0.10 VOLT ABOVE PARAMETER VALUE
4. TIMING PULSE Ø1 THRU Ø4 AND T1 THRU T9 ARE GENERATED BY SYSTEM A TIMING AS SHOWN IN ZONE P/8. THE NOTATION T8Ø3 INDICATES A PHASE 3 (Ø3) PULSE IN TIME PERIOD 8 (T8). THE SYMBOLS (T8Ø3), (T8) AND (Ø3) REPRESENT TIMING SIGNALS FROM ZONE P8. THE SYMBOL (PUS) REPRESENTS A POWER UP STROBE PULSE GENERATOR SIGNAL FROM ZONE D/5
3. PROM LIMITS ARE DETERMINED BY PLUG IN CAUTION/WARNING LIMITS MODULE (CWLM)LOCATED ON FRONT OF C/W ELECTRONICS BOX IN AVIONICS BAY 3A REFERENCE TABLE 5-I FOR A LISTING OF PROM LIMIT VALUES
2. IF TRIGGERED, THE POWER SUPPLY (PS) SHUTDOWN SIGNAL WILL REMAIN LATCHED AS LONG AS INPUT POWER IS APPLIED

NOTES: 1. THIS DWG IS A SIMPLIFIED FUNCTIONAL REPRESENTATION OF THE ORBITER HARDWARE SYSTEM

2 C/W 2

SIGNATURE	DATE	NATIONAL AERONAUTICS AND SPACE ADMINISTRATION LYNDON B. JOHNSON SPACE CENTER HOUSTON, TEXAS
DSGN Laurie M. Buchanan	2-19-80	
DR		
ENGR B. PAWLIK		CAUTION/WARNING
ENGR	10-21-91	
APP	10/24/91	
APP		SPACE SHUTTLE / DWG NO 5.2
OMNIPLAN S.E. Kinkaid	10-23-91	ALL
LTR E PCN 1		126.5 X 34 / PAGE SHEET 2 OF 2

BASIC REV E-1

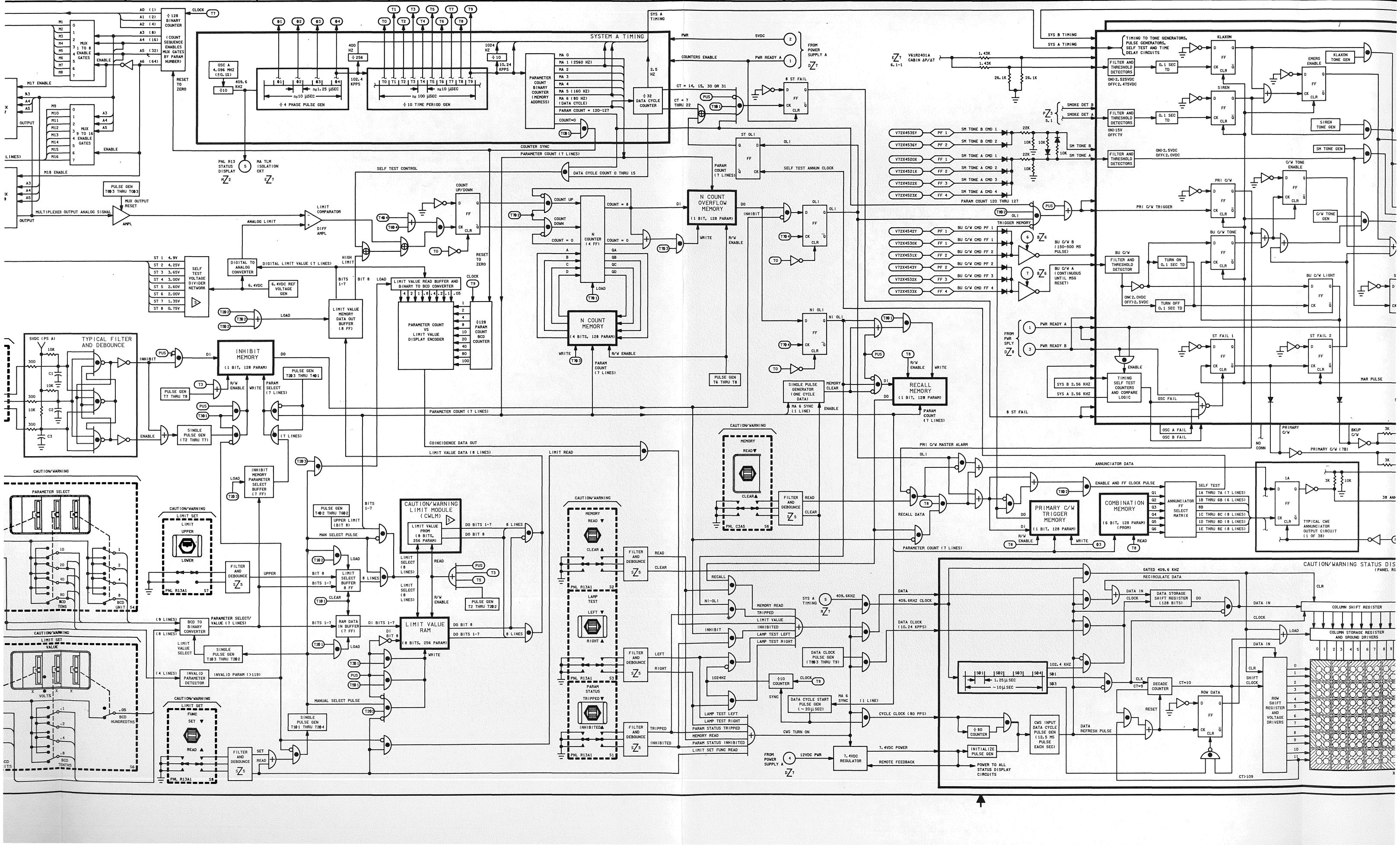
SYSTEM A TIMING
÷128 BINARY COUNTER
MUX 1 TO 8 ENABLE GATES
MUX 9 TO 16 ENABLE GATES
OSC A 4.096 MHZ (±0.1%)
409.6 KHZ
÷4 PHASE PULSE GEN
÷10 TIME PERIOD GEN
400 HZ
102.4 KPPS
1024 HZ
10.24 KPPS
PARAMETER COUNT BINARY COUNTER (MEMORY ADDRESS)
MA 0
MA 1 (2560 HZ)
MA 2
MA 3
MA 4
MA 5 (160 HZ)
MA 6 (80 HZ) (DATA CYCLE)
PARAM COUNT = 120-127
COUNT=0
÷32 DATA CYCLE COUNTER
2.5 HZ
CT = 14, 15, 30 OR 31
CT = 7 THRU 22
8 ST FAIL
ST OLI
OLI
SELF TEST ANNUN CLOCK
PARAM COUNT (7 LINES)
DATA CYCLE COUNT 0 THRU 15
COUNTER SYNC
PARAMETER COUNT (7 LINES)
PNL R13 STATUS DISPLAY
MA TLM ISOLATION CKT
SELF TEST CONTROL
COUNT UP/DOWN
N COUNTER (4 FF)
N COUNT OVERFLOW MEMORY (1 BIT, 128 PARAM)
N COUNT MEMORY (4 BITS, 128 PARAM)
R/W ENABLE
PULSE GEN T2@3 THRU T7@3
MUX OUTPUT RESET
MULTIPLEXER OUTPUT ANALOG SIGNAL
AMPL
LIMIT COMPARATOR
DIFF AMPL
ANALOG LIMIT
DIGITAL TO ANALOG CONVERTER
DIGITAL LIMIT VALUE (7 LINES)
6.4VDC REF VOLTAGE GEN
SELF TEST VOLTAGE DIVIDER NETWORK
ST 1 4.9V
ST 2 4.25V
ST 3 3.65V
ST 4 3.00V
ST 5 2.60V
ST 6 2.00V
ST 7 1.35V
ST 8 0.75V
HIGH LIMIT
BITS 1-7
BIT 8
LOAD
LIMIT VALUE READ BUFFER AND BINARY TO BCD CONVERTER
4 2 1 8 4 2 1 .05
PARAMETER COUNT VS LIMIT VALUE DISPLAY ENCODER
÷128 PARAM COUNT BCD COUNTER
LIMIT VALUE MEMORY DATA OUT BUFFER (8 FF)
RESET TO ZERO
CLOCK
PULSE GEN T6 THRU T8
TYPICAL FILTER AND DEBOUNCE
5VDC (PS A)
INHIBIT MEMORY (1 BIT, 128 PARAM)
PULSE GEN T7 THRU T8
PULSE GEN T2@3 THRU T4@1
SINGLE PULSE GEN (T2 THRU T7)
PARAM SELECT (7 LINES)
PARAMETER COUNT (7 LINES)
COINCIDENCE DATA OUT
LIMIT VALUE DATA (8 LINES)
LIMIT READ
INHIBIT MEMORY PARAMETER SELECT BUFFER (7 FF)
PULSE GEN T4@2 THRU T6@2
UPPER LIMIT (BIT 8)
MAN SELECT PULSE
CAUTION/WARNING LIMIT MODULE (CWLM)
LIMIT VALUE PROM (8 BITS, 256 PARAM)
LIMIT SELECT (8 LINES)
LIMIT SELECT BUFFER 8 FF
RAM DATA IN BUFFER (7 FF)
LIMIT VALUE RAM (8 BITS, 256 PARAM)
DI BIT 8
DO BITS 1-7
DO BIT 8
8 LINES
MANUAL SELECT PULSE
SINGLE PULSE GEN T@1 THRU T2@4
PARAMETER SELECT/ VALUE (7 LINES)
BCD TO BINARY CONVERTER
LIMIT VALUE SELECT
SINGLE PULSE GEN T@3 THRU T2@2
INVALID PARAMETER DETECTOR
INVALID PARAM (>119)
CAUTION/WARNING
PARAMETER SELECT
LIMIT SET
LIMIT
UPPER
LOWER
FUNC
SET
READ
FILTER AND DEBOUNCE
PNL R13A1
BCD TENS
BCD UNIT
BCD TENTHS
BCD HUNDREDTHS
VOLTS
MEMORY
CLEAR
PARAM STATUS
TRIPPED
INHIBITED
LAMP TEST
LEFT
RIGHT
RECALL
NI-OLI
MEMORY READ
LIMIT VALUE
LAMP TEST LEFT
LAMP TEST RIGHT
PARAM STATUS TRIPPED
PARAM STATUS INHIBITED
LIMIT SET FUNC READ
CWS TURN ON
1024HZ
÷10 COUNTER
SYNC
DATA CYCLE START PULSE GEN (~20µSEC)
DATA CLOCK PULSE GEN (T@3 THRU T9)
SINGLE PULSE GENERATOR (ONE CYCLE DATA)
MEMORY CLEAR
MA 6 SYNC (1 LINE)
RECALL MEMORY (1 BIT, 128 PARAM)
FROM POWER SUPPLY A
12VDC PWR
7.4VDC REGULATOR
7.4VDC POWER
REMOTE FEEDBACK
POWER TO ALL STATUS DISPLAY CIRCUITS
SYS A TIMING
SYS B TIMING
PWR
5VDC
COUNTERS ENABLE
PWR READY A
FROM POWER SUPPLY A
V61R2401A CABIN ΔP/ΔT
TIMING TO TONE GENERATORS, PULSE GENERATORS, SELF TEST AND TIME DELAY CIRCUITS
FILTER AND THRESHOLD DETECTORS
ON 2.525VDC OFF 2.475VDC
0.1 SEC TD
KLAXON
KLAXON TONE GEN
EMERG ENABLE
SIREN
SIREN TONE GEN
SMOKE DET B
SMOKE DET A
ON 15V OFF 7V
SM TONE B
SM TONE A
SM TONE GEN
ON 2.5VDC OFF 2.0VDC
V72X4535Y PF 1 SM TONE B CMD 1
V72X4536Y PF 2 SM TONE B CMD 2
V72X4520X FF 1 SM TONE A CMD 1
V72X4521X FF 2 SM TONE A CMD 2
V72X4522X FF 3 SM TONE A CMD 3
V72X4523X FF 4 SM TONE A CMD 4
PARAM COUNT 120 THRU 127
PRI C/W
PRI C/W ENABLE
PRI C/W TRIGGER
C/W TONE ENABLE
C/W TONE GEN
BU C/W
BU C/W TONE
BU C/W LIGHT
TRIGGER MEMORY
V72X4542Y PF 1 BU C/W CMD FF 1
V72X4530X FF 1 BU C/W CMD FF 1
V72X4531X FF 2 BU C/W CMD FF 2
V72X4543Y FF 2 BU C/W CMD FF 2
V72X4532X FF 3 BU C/W CMD FF 3
V72X4533X FF 4 BU C/W CMD FF 4
BU C/W B (150-500 MS PULSE)
BU C/W A (CONTINUOUS UNTIL MSG RESET)
TURN ON 0.1 SEC TD
TURN OFF 0.1 SEC TD
ON 2.0VDC OFF 2.5VDC
ST FAIL 1
ST FAIL 2
MAR PULSE
TIMING SELF TEST COUNTERS AND COMPARE LOGIC
SYS B 2.56 KHZ
SYS A 2.56 KHZ
OSC FAIL
OSC A FAIL
OSC B FAIL
NO CONN
PRIMARY C/W
BKUP C/W
PRIMARY C/W (7B)
PRI C/W MASTER ALARM
ANNUNCIATOR DATA
ENABLE AND FF CLOCK PULSE
PRIMARY C/W TRIGGER MEMORY (1 BIT, 128 PARAM)
COMBINATION MEMORY (6 BIT, 128 PARAM) (PROM)
ANNUNCIATOR FF SELECT MATRIX
SELF TEST
1A THRU 7A (7 LINES)
1B THRU 6B (6 LINES)
8B
1C THRU 8C (8 LINES)
1D THRU 8D (8 LINES)
1E THRU 8E (8 LINES)
TYPICAL CWE ANNUNCIATOR OUTPUT CIRCUIT (1 OF 38)
38 ANN
CAUTION/WARNING STATUS DIS
(PANEL R1
GATED 409.6 KHZ
RECIRCULATE DATA
DATA STORAGE SHIFT REGISTER (128 BITS)
COLUMN SHIFT REGISTER
COLUMN STORAGE REGISTER AND GROUND DRIVERS
ROW SHIFT REGISTER AND VOLTAGE DRIVERS
ROW DATA
DECADE COUNTER
CT=9
CT=10
CT>109
409.6KHZ CLOCK
DATA CLOCK (10.24 KPPS)
CWS INPUT DATA CYCLE PULSE GEN (12.5 MS PULSE EACH SEC)
DATA REFRESH PULSE
CYCLE CLOCK (80 PPS)
÷80 COUNTER
INITIALIZE PULSE GEN

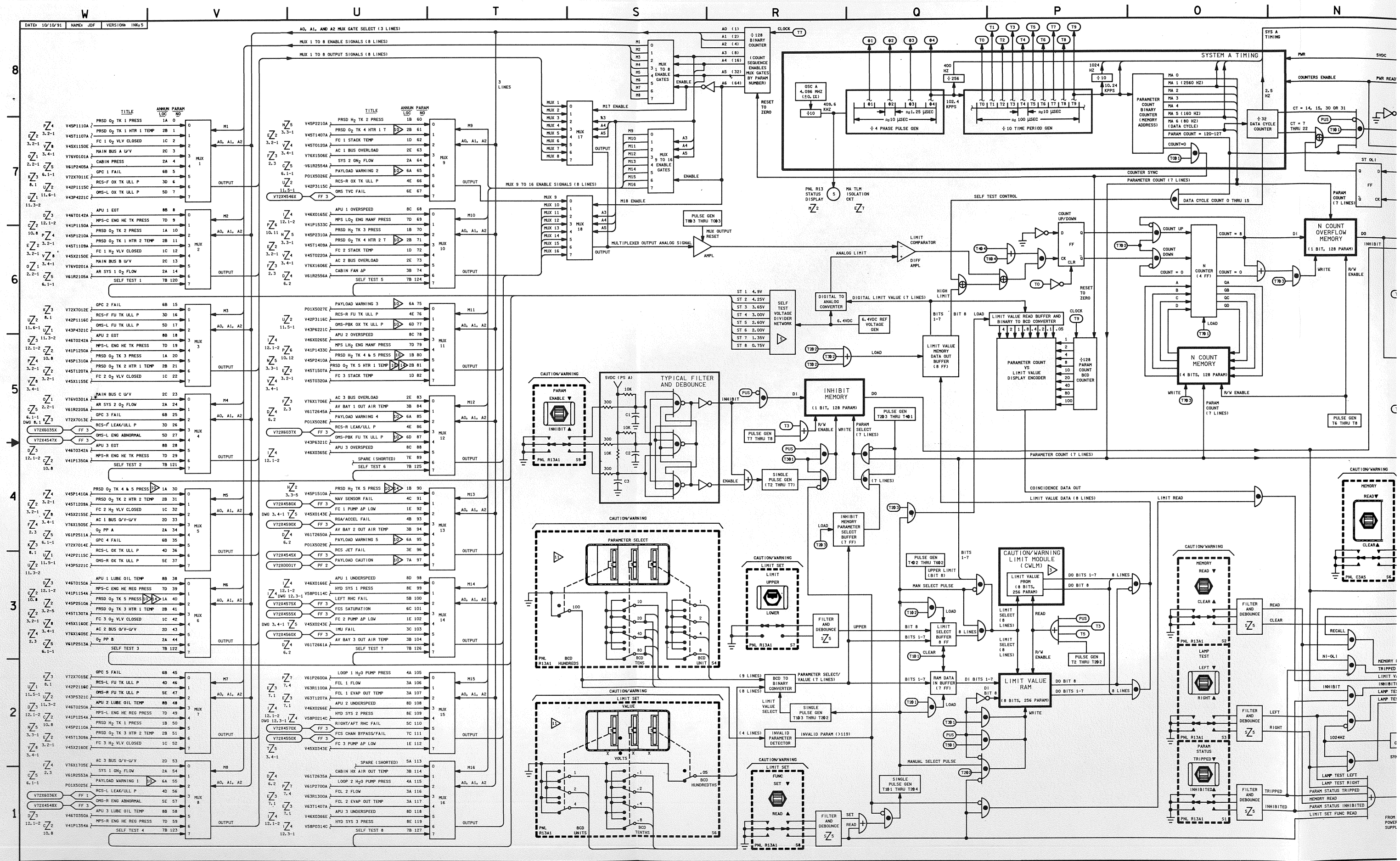

SYSTEM A TIMING
÷ 4 PHASE PULSE GEN
÷ 10 TIME PERIOD GEN
PARAMETER COUNT BINARY COUNTER (MEMORY ADDRESS)
÷ 32 DATA CYCLE COUNTER
N COUNT OVERFLOW MEMORY (1 BIT, 128 PARAM)
N COUNT MEMORY (4 BITS, 128 PARAM)
LIMIT VALUE MEMORY DATA OUT BUFFER (8 FF)
LIMIT VALUE READ BUFFER AND BINARY TO BCD CONVERTER
PARAMETER COUNT VS LIMIT VALUE DISPLAY ENCODER
÷128 PARAM COUNT BCD COUNTER
INHIBIT MEMORY (1 BIT, 128 PARAM)
TYPICAL FILTER AND DEBOUNCE
CAUTION/WARNING LIMIT MODULE (CWLM)
LIMIT VALUE RAM (8 BITS, 256 PARAM)
LIMIT SELECT BUFFER 8 FF
RAM DATA IN BUFFER (7 FF)
INHIBIT MEMORY PARAMETER SELECT BUFFER (7 FF)
PARAMETER SELECT
LIMIT SET VALUE
LIMIT SET FUNC

BASIC REV E-1

DATE: 10/10/90	NAME: LAM	VERSION: BPT: 4
DATE: 10/17/90	NAME: BJT	VERSION: INK: 5
DATE: 11/01/90	NAME: LAM	VERSION: INK: 6

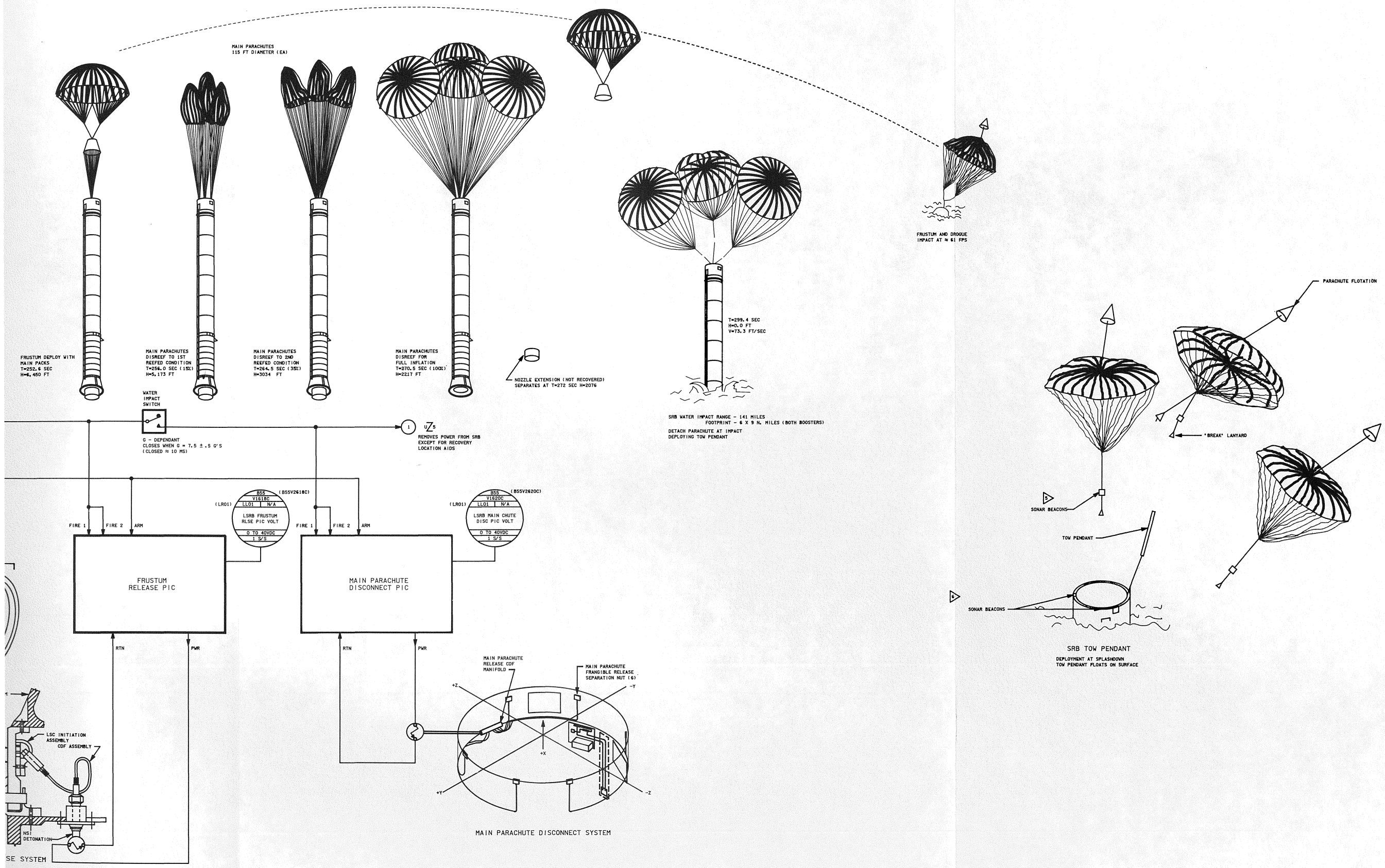

8. ALL TIMES AND ALTITUDES ARE 'TYPICAL' MISSION PERFORMANCE FROM FLIGHT DATA

7. SEE TABLE 5-XXX FOR DRAWING REFERENCES

6. SONAR BEACONS (2) ARE SALT WATER ACTIVATED IF SRB'S SUBMERGE
OPERATING FREQUENCIES: ONE AT 10 KHZ
OTHER AT 35 KHZ

5. MAIN PARACHUTE RECOVERY ACCOMPLISHED BY MEANS OF SALT WATER ACTIVATED SONAR BEACONS.
ONE BEACON PER PARACHUTE. OPERATING FREQ: 10 KHZ

4. DELETED

3. RF BEACON
RF POWER OUTPUT .5 WATTS
VSWR 2:1

2. FLASHING LIGHT ASSEMBLY
FLASH RATE 70/90 FLASHES/MIN
FLASH INTENSITY TBD CANDLE PWR/SEC
LIGHT ACTIVATED AT DUSK, OFF AT DAWN

NOTES: 1. LH SRB SHOWN, RH SRB IDENTICAL

4 SRB REC

SIGNATURE		DATE	NATIONAL AERONAUTICS AND SPACE ADMINISTRATION LYNDON B. JOHNSON SPACE CENTER HOUSTON, TEXAS
DSGN	L. M. BUCHANAN	6/19/79	
DR			SOLID ROCKET BOOSTER RECOVERY
ENGR			
ENGR	D. Randall	11/9/90	
APP	Paul D. Royce	11-8-90	
APP			SPACE SHUTTLE ALL
OMNIPLAN	S.K. Kinker	11-14-90	DWG NO APP 5.4
LTR E	PCN		121 X 34 PAGE SHEET 1 OF 1

BASIC REV E

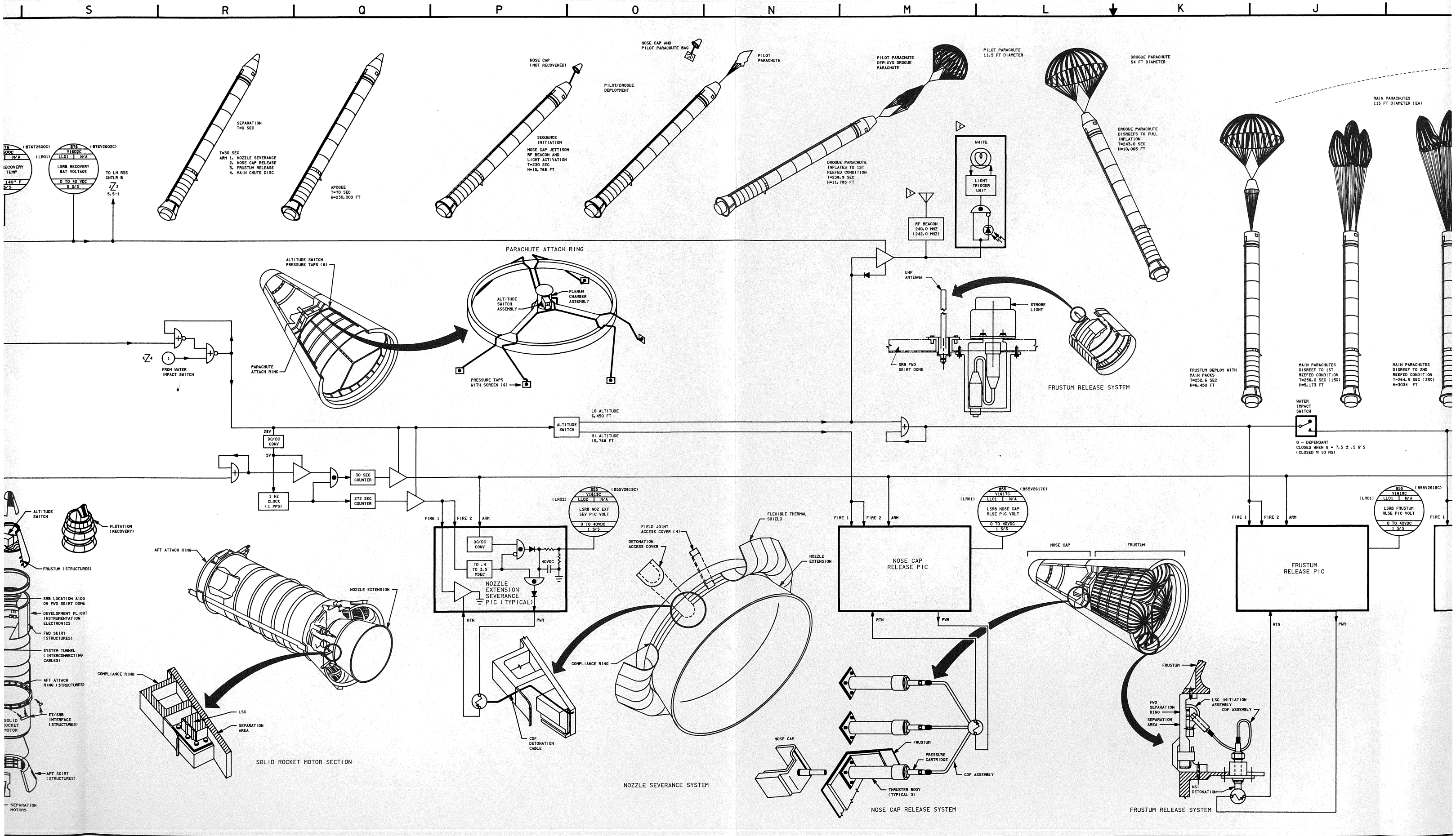

S
R
Q
P
O
N
M
L
K
J
SEPARATION T=0 SEC
T=30 SEC ARM 1. NOZZLE SEVERANCE 2. NOSE CAP RELEASE 3. FRUSTUM RELEASE 4. MAIN CHUTE DISC
APOGEE T=70 SEC H=230,000 FT
NOSE CAP (NOT RECOVERED)
SEQUENCE INITIATION
NOSE CAP JETTISON RF BEACON AND LIGHT ACTIVATION T=230 SEC H=15,768 FT
PILOT/DROGUE DEPLOYMENT
NOSE CAP AND PILOT PARACHUTE BAG
PILOT PARACHUTE
PILOT PARACHUTE DEPLOYS DROGUE PARACHUTE
DROGUE PARACHUTE INFLATES TO 1ST REEFED CONDITION T=238.9 SEC H=11,785 FT
PILOT PARACHUTE 11.5 FT DIAMETER
DROGUE PARACHUTE 54 FT DIAMETER
DROGUE PARACHUTE DISREEFS TO FULL INFLATION T=243.0 SEC H=10,065 FT
MAIN PARACHUTES 115 FT DIAMETER (EA)
WHITE
LIGHT TRIGGER UNIT
RF BEACON 240.0 MHZ (242.0 MHZ)
PARACHUTE ATTACH RING
ALTITUDE SWITCH PRESSURE TAPS (6)
ALTITUDE SWITCH ASSEMBLY
PLENUM CHAMBER ASSEMBLY
PRESSURE TAPS WITH SCREEN (6)
FROM WATER IMPACT SWITCH
UHF ANTENNA
STROBE LIGHT
SRB FWD SKIRT DOME
FRUSTUM RELEASE SYSTEM
FRUSTUM DEPLOY WITH MAIN PACKS T=252.6 SEC H=6,450 FT
MAIN PARACHUTES DISREEF TO 1ST REEFED CONDITION T=256.0 SEC (15%) H=5,173 FT
MAIN PARACHUTES DISREEF TO 2ND REEFED CONDITION T=264.5 SEC (35%) H=3034 FT
WATER IMPACT SWITCH
G - DEPENDANT CLOSES WHEN G = 7.5 ± .5 G'S (CLOSED ≈ 10 MS)
LO ALTITUDE 6,450 FT
HI ALTITUDE 15,768 FT
ALTITUDE SWITCH
28V
DC/DC CONV
5V
1 HZ CLOCK (1 PPS)
30 SEC COUNTER
272 SEC COUNTER
FIRE 1
FIRE 2
ARM
DC/DC CONV
TD .4 TO 3.5 MSEC
40VDC
NOZZLE EXTENSION SEVERANCE PIC (TYPICAL)
RTN
PWR
LSRB NOZ EXT SEV PIC VOLT
LSRB NOSE CAP RLSE PIC VOLT
LSRB FRUSTUM RLSE PIC VOLT
NOSE CAP RELEASE PIC
FRUSTUM RELEASE PIC
NOSE CAP
FRUSTUM
ALTITUDE SWITCH
FLOTATION (RECOVERY)
FRUSTUM (STRUCTURES)
SRB LOCATION AIDS ON FWD SKIRT DOME
DEVELOPMENT FLIGHT INSTRUMENTATION ELECTRONICS
FWD SKIRT (STRUCTURES)
SYSTEM TUNNEL (INTERCONNECTING CABLES)
AFT ATTACH RING (STRUCTURES)
ET/SRB INTERFACE (STRUCTURES)
AFT SKIRT (STRUCTURES)
SEPARATION MOTORS
AFT ATTACH RING
NOZZLE EXTENSION
COMPLIANCE RING
LSC
SEPARATION AREA
SOLID ROCKET MOTOR SECTION
FIELD JOINT ACCESS COVER (4)
DETONATION ACCESS COVER
FLEXIBLE THERMAL SHIELD
NOZZLE EXTENSION
COMPLIANCE RING
CDF DETONATION CABLE
NOZZLE SEVERANCE SYSTEM
NOSE CAP
FRUSTUM
PRESSURE CARTRIDGE
CDF ASSEMBLY
THRUSTER BODY (TYPICAL 3)
NOSE CAP RELEASE SYSTEM
FRUSTUM
FWD SEPARATION RING
SEPARATION AREA
LSC INITIATION ASSEMBLY
CDF ASSEMBLY
NSI DETONATION
FRUSTUM RELEASE SYSTEM

DATE: 11/01/90 | NAME: LAM | VERSION: INK6

ORBITER | ET | LSRB

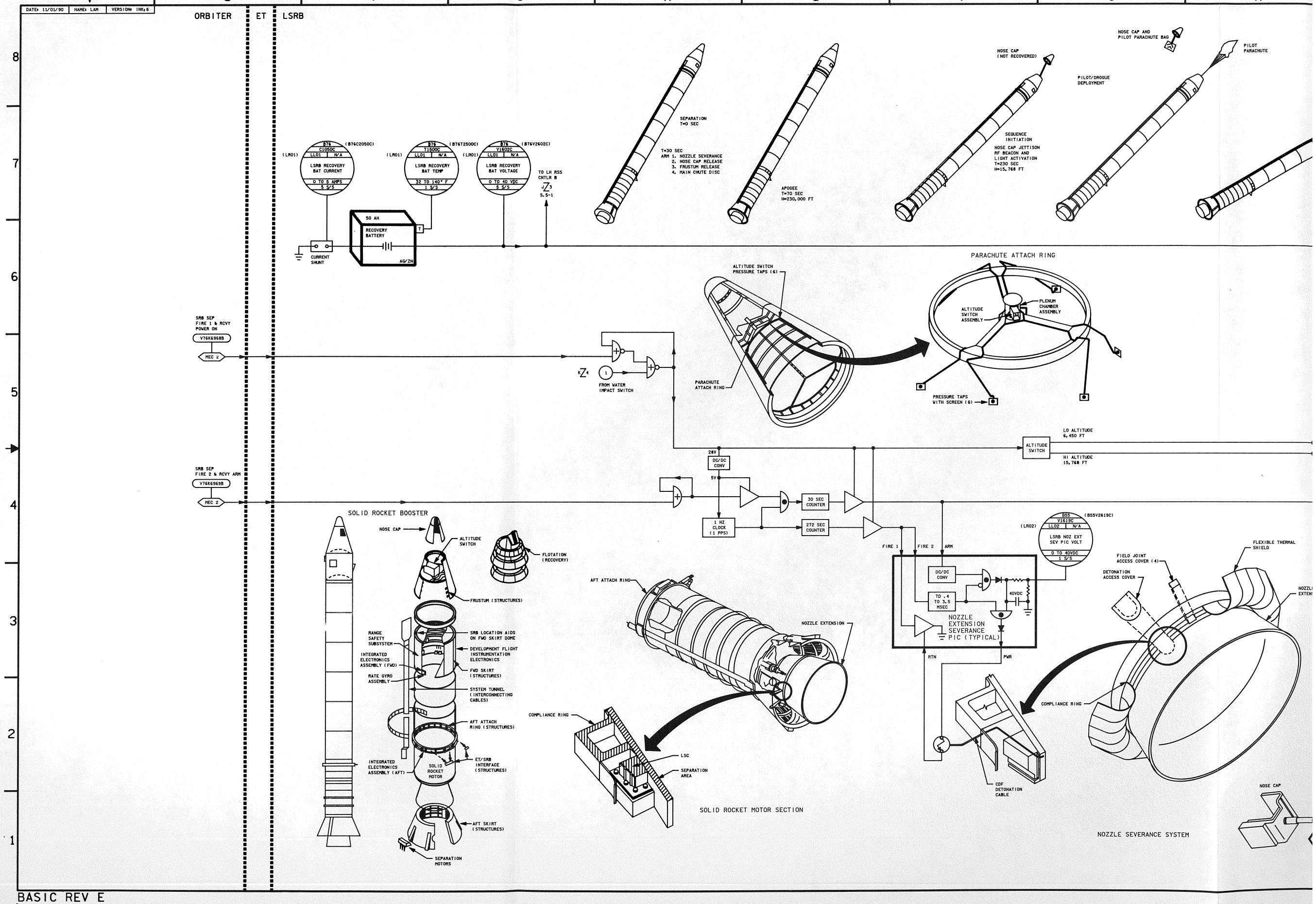

BASIC REV E

DATE: 11/08/88	NAME: JDF	VERSION: INK, 7
DATE: 10/06/90	NAME: CAR	VERSION: BPT, 6
DATE: 10/12/90	NAME: MFB	VERSION: INK, 7

RH SRB RSS DISTRIBUTOR

RH RSS CONTROLLER A

RH RSS CONTROLLER B

LH SRB RSS DISTRIBUTOR

LH RSS CONTROLLER A

LH RSS CONTROLLER B

RSS BAT NO 1 — SHUNT — 50AH — VOLT REG — POWER LATCHING SWITCH — ARM LATCHING SWITCH — FIRE LATCHING SWITCH — TIME DELAY 30 ± 10 MS — FILTER

SAFE (1) SWITCH — SAFE (2) SWITCH — ARM SWITCH

$V_{MNA/C}$ RH SRB — $V_{MNA/C}$ LH SRB

RSS S & A DEVICE — SAFED — ARMED

FIRING CIRCUIT — RH PIC A — RH PIC B — LH PIC A — LH PIC B

DC/DC CONV — CAP BANK 680 MF — SW DRIVER — FIRE (2) SW — FIRE (1) SW — BITE CIRCUIT — CKT — SW

ARM — +FIRE — FIRE 2 — FIRE 1

GSE RSS RTST CMD — RTST CMD RET — +5VDC

FROM RH SRB RCVY BAT 5, 4 — FROM LH SRB RCVY BAT 5, 4

PYRO OUTPUT — PYRO OUTPUT RTN

MANUAL SAFING AND LOCKING PIN — SAFE — ARM — MOTOR — NSD — SLIDING SURFACE — PYRO CHARGE — FLAME TUNNEL FROM NSI — CDF MANIFOLD

RH SRB — LH SRB — LINEAR SHAPED CHARGE ASSEMBLY

B55 X2870X — LRO1 — N/A — RH SRB RSS S AND A ARMED — 1=ARMED — 5 S/S

B55 X2869X — RH SRB RSS S AND A SAFED — 1=SAFED

B55 X2865X — RH RSS PIC A ARMED — 1=ARMED

B55 X2867X — RH RSS PIC A FIRED — 1=FIRED

B55 V2623C — RH SRB VOLT RSS PIC A — 0 TO 40VDC

B55 X2866X — RH RSS PIC B ARMED

B55 X2873X — RH RSS PIC A RTST OK — 1=GO

B55 X2875X — RH RSS PIC A L/T OK

B55 V2624C — RH SRB VOLT RSS PIC B

B55 X2874X — RH RSS PIC B RTST OK

B55 X2876X — RH RSS PIC B L/T OK

B55 X2868X — RH RSS PIC B FIRED

B55 X1865X — LH RSS PIC A ARMED

B55 X1867X — LH RSS PIC A FIRED

B55 V1623C — LH SRB VOLT RSS PIC A

B55 X1866X — LH RSS PIC B ARMED

B55 X1873X — LH RSS PIC A RTST OK

B55 X1875X — LH RSS PIC A L/T OK

B55 V1624C — LH SRB VOLT RSS PIC B

B55 X1876X — LH RSS PIC B L/T OK

B55 X1868X — LH RSS PIC B FIRED

B55 X1870X — LH SRB RSS S AND A ARMED

B55 X1869X — LH SRB RSS S AND A SAFED

B55 X1874X — LH RSS PIC B RTST OK

6. NSI - NASA STANDARD INITIATOR
AH - AMP HOURS
NSD - NASA STANDARD DETONATORS
LIT - LOAD TEST
RTST - RESISTANCE TEST

3. THE 30 MS TIME DELAY ENSURES ENOUGH TIME FOR CROSS STRAPPING BETWEEN DEVICES ONCE A FIRE COMMAND IS ISSUED

2. CAPACITIVE BANK WILL CHARGE UP TO 38 VDC WITHIN 1.2 SEC

3. PIC RESISTANCE TEST REQUIRES AN INPUT COMMAND TO TEST THE RESISTANCE OF THE INITIATOR. WHEN RESISTANCE VALUE MEETS REQUIREMENTS, A 5 VOLT DISCRETE IS OUTPUT TO TELEMETRY. THIS CIRCUIT IS USED IN A PRELAUNCH SEQUENCE FOLLOWING ELECTRICAL CONNECTION TO LIVE NSD'S TO VERIFY OPERATION READINESS

2. LOAD TEST OK CIRCUIT SENSES THE CAPACITOR DISCHARGE WAVEFORM. WHEN SUFFICIENT ENERGY IS STORED IN CAP BANK, LOAD TEST BITE GENERATES A 5 VOLT DISCRETE TO TELEMETRY. THIS IS A CHECKOUT FEATURE AND USED WITH NSD ONE OHM SIMULATORS TO VERIFY FIRING ENERGY

NOTES: 1. SEE TABLE 5-III FOR DRAWING REFERENCES

5 RSS 1

SIGNATURE	DATE	NATIONAL AERONAUTICS AND SPACE ADMINISTRATION LYNDON B. JOHNSON SPACE CENTER HOUSTON, TEXAS
DSGN VICKI S. DOOGETT	12/8/78	
DR VICKI S. DOOGETT	12/8/78	
ENGR D. RANDALL		SRB/ET RANGE SAFETY SYSTEM
ENGR D. Randall	10/5/90	
APP Paul Monroe	10/5/90	
APP		SPACE SHUTTLE — DWG NO 5.5
OMNIPLAN S.F. Rinaldi	11-1-90	ALL
LTR E — PCN		126.5 X 34 — PAGE — SHEET 1 OF 2

BASIC REV E

S R Q P O N M L K J

ET RSS DISTRIBUTOR

ET CONTROLLER A

ET CONTROLLER B

FIRING CIRCUIT PIC A

FIRING CIRCUIT PIC B

DC/DC CONVERTER

CAP BANK 680 MF

SW DRIVER

SW DRIVER

CKT

BITE CIRCUIT

ARM

FIRE 2

FIRE 1

+FIRE

30 ± 10MS TIME DELAY

"FIRE" LATCHING DRIVER

"ARM" LATCHING DRIVER

GSE INHIBIT/ RESET

100 MS PULSER

100 MS PULSER

VOLTAGE REG

ET RSS BAT NO 1

18AH

SHUNT

POWER LATCHING SWITCH

CURRENT LIMITER

SAFE (1) SWITCH

SAFE (2) SWITCH

ARM SWITCH

T55 C1077A 0A03 0A3 ET RSS BAT 1 CUR IND 0 TO 5 AMPS 5 S/S

T55 V1735A 0A03 0A3 ET RSS BAT 1 VOLT 0 TO 40VDC 5 S/S

GSE PWR ON

GSE PWR INHIBIT

PWR TO ET IRD

ET DCDR ARM

T55 X1931E 0A02 0A2 ET RSS ARM 1=ARM 25 S/S

ET DCDR FIRE

+5VDC

GSE RSS RTST CMD

T55 X1933E 0A02 0A2 ET RSS FIRE 1=FIRE 25 S/S

GSE RSS RTST CMD RET

GSE SAFE 1 (FROM LH SRB)

GSE SAFE 2 (FROM LH SRB)

GSE ARM (FROM LH SRB)

T55 C1076A 0A03 0A3 ET RSS BAT 2 CUR IND 0 TO 5 AMPS 5 S/S

T55 V1736A 0A03 0A3 ET RSS BAT 2 VOLT 0 TO 40VDC 5 S/S

ET RSS BAT NO 2 18AH SHUNT

GSE PWR ON

GSE PWR INHIBIT

ET DCDR ARM

ET DCDR FIRE

+5VDC

GSE RSS RTST CMD

GSE RSS RTST CMD RET

ARM LIGHT

ACA 1 39

ACA 2 35

ACA 3 39

RNG SAF ARM

PNL F6A8 XDS3

B55 C2051C LRO1 N/A RH RSS BAT 1 CURR 0 TO 5 AMPS 5 S/S

SAFE 1 MEC 2 MEC 1 SAFE 2 GSE GSE GSE ARM (B55K4044X) (B55K451TE) (B55K3518E)

PWR TO RH IRD A

B55 Y2625C LRO1 N/A RH SRB BAT NO 1 VOLT 0 TO 40VDC 5 S/S

OFF MEC 1 GSE PWR ON GSE (B55K4515E)

RH DCDR A ARM

RH DCDR A FIRE

GSE RSS RTST CMD

GSE RSS RTST CMD RET

+5VDC

PWR TO RH IRD B

B55 X2879X LRO1 N/A RH SRB RSS A FIRE 1=DEST 25 S/S

B55 X2877X LRO1 N/A RH SRB RSS A ARM 1=ARM 25 S/S

OFF MEC 2 GSE PWR ON GSE (B55K4516E)

RH DCDR B ARM

RH DCDR B FIRE

GSE RSS RTST CMD

GSE RSS RTST CMD RET

+5VDC

B55 X2880X LRO1 N/A RH SRB RSS B FIRE 1=DEST 25 S/S

B55 X2878X LRO1 N/A RH SRB RSS B ARM 1=ARM 25 S/S

B55 C1051C LLO1 N/A LH RSS BAT NO 1 CURR 0 TO 5 AMPS 5 S/S

PWR TO LH IRD A

B55 Y1625C LLO1 N/A LH SRB BAT NO 1 VOLT 0 TO 40VDC 5 S/S

OFF MEC 1 GSE PWR ON GSE (B55K3515E)

LH DCDR A ARM

LH DCDR A FIRE

GSE RSS RTST CMD

GSE RSS RTST CMD RET

+5VDC

PWR TO LH IRD B

B55 X1879X LLO1 N/A LH SRB RSS A FIRE 1=DEST 25 S/S

B55 X1877X LLO1 N/A LH SRB RSS A ARM 1=ARM 25 S/S

OFF MEC 2 GSE PWR ON GSE (B55K3516E)

LH DCDR B ARM

LH DCDR B FIRE

GSE RSS RTST CMD

GSE RSS RTST CMD RET

+5VDC

B55 X1880X LLO1 N/A LH SRB RSS B FIRE 1=DEST 25 S/S

B55 X1878X LLO1 N/A LH SRB RSS B ARM 1=ARM 25 S/S

SAFE 1 MEC 1 MEC 2 SAFE 2 GSE GSE GSE ARM (B55K3044X) (B55K3517E) (B55K4518E)

RSS BAT NO 1 SHUNT 50AH VOLT REG POWER LATCHING SWITCH ARM LATCHING SWITCH FIRE LATCHING SWITCH FIRE TIME DE 30 ± 10

FROM RH SRB RCVY BAT DWG 5.4

RSS BAT NO 1 SHUNT 50AH FILTER POWER LATCHING SWITCH ARM LATCHING SWITCH FIRE LATCHING SWITCH FIRE

FROM LH SRB RCVY BAT

POWER LATCHING SWITCH ARM LATCHING SWITCH FIRE LATCHING SWITCH FIRE

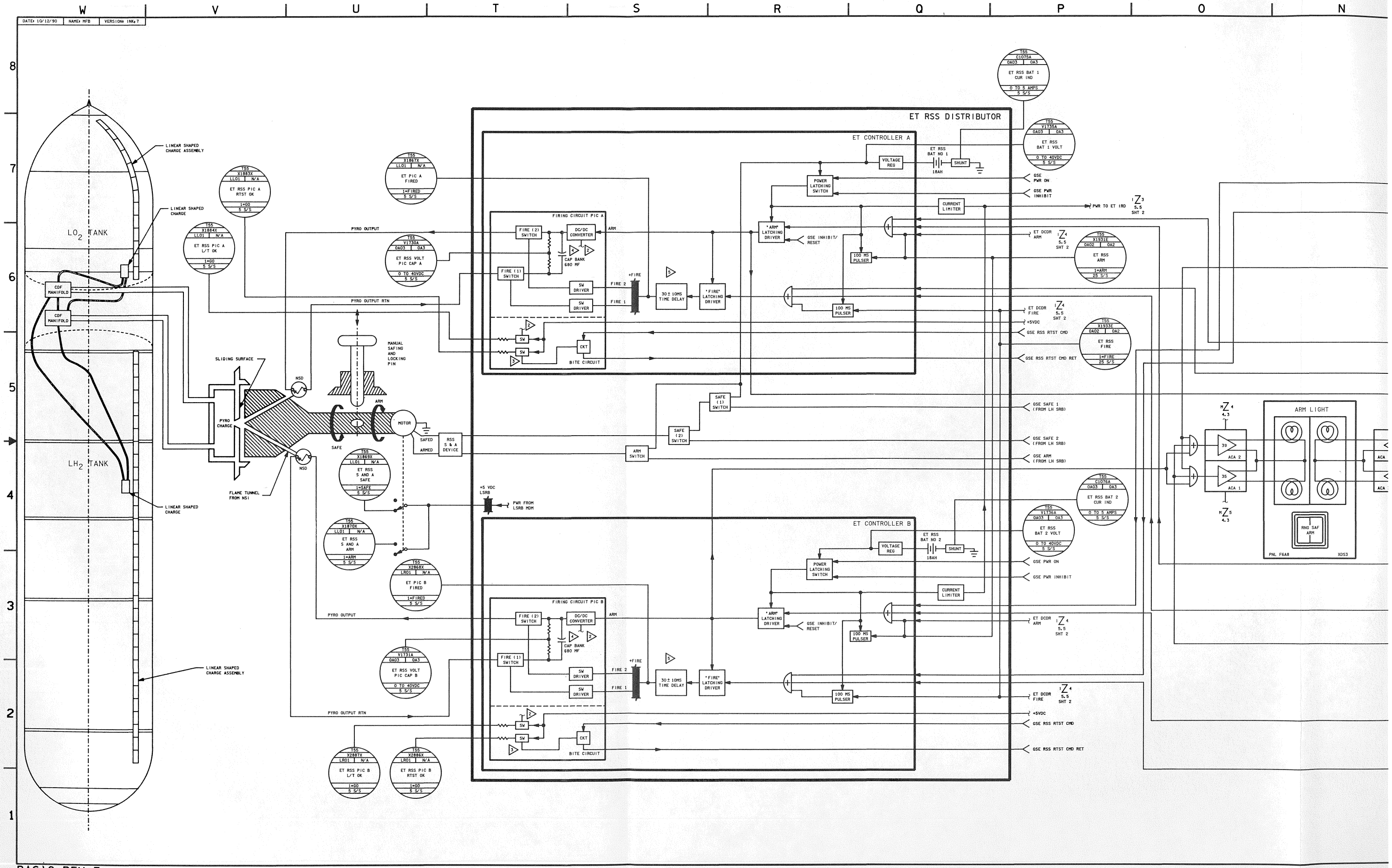

DATE: 10/12/90
NAME: MFB
VERSION: INK 7
ET RSS DISTRIBUTOR
ET CONTROLLER A
ET CONTROLLER B
FIRING CIRCUIT PIC A
FIRING CIRCUIT PIC B
LO2 TANK
LH2 TANK
LINEAR SHAPED CHARGE ASSEMBLY
LINEAR SHAPED CHARGE
CDF MANIFOLD
SLIDING SURFACE
PYRO CHARGE
FLAME TUNNEL FROM NSI
MANUAL SAFING AND LOCKING PIN
MOTOR
SAFE
ARM
NSD
SAFED
ARMED
RSS S & A DEVICE
PYRO OUTPUT
PYRO OUTPUT RTN
+5 VDC LSRB
PWR FROM LSRB MDM
ET PIC A FIRED
ET RSS PIC A RTST OK
ET RSS PIC A L/T OK
ET RSS VOLT PIC CAP A
ET RSS S AND A SAFE
ET RSS S AND A ARM
ET PIC B FIRED
ET RSS VOLT PIC CAP B
ET RSS PIC B L/T OK
ET RSS PIC B RTST OK
ET RSS BAT 1 CUR IND
ET RSS BAT 1 VOLT
ET RSS BAT 2 CUR IND
ET RSS BAT 2 VOLT
ET RSS FIRE
ET RSS ARM
ET DCDR ARM
ET DCDR FIRE
GSE PWR ON
GSE PWR INHIBIT
PWR TO ET IRD
GSE RSS RTST CMD
GSE RSS RTST CMD RET
GSE SAFE 1 (FROM LH SRB)
GSE SAFE 2 (FROM LH SRB)
GSE ARM (FROM LH SRB)
VOLTAGE REG
POWER LATCHING SWITCH
CURRENT LIMITER
"ARM" LATCHING DRIVER
GSE INHIBIT/ RESET
100 MS PULSER
30 ± 10MS TIME DELAY
"FIRE" LATCHING DRIVER
FIRE (2) SWITCH
FIRE (1) SWITCH
DC/DC CONVERTER
CAP BANK 680 MF
SW DRIVER
BITE CIRCUIT
SAFE (1) SWITCH
SAFE (2) SWITCH
ARM SWITCH
ARM LIGHT
RNG SAF ARM
PNL F6A8
XDS3

BASIC REV E

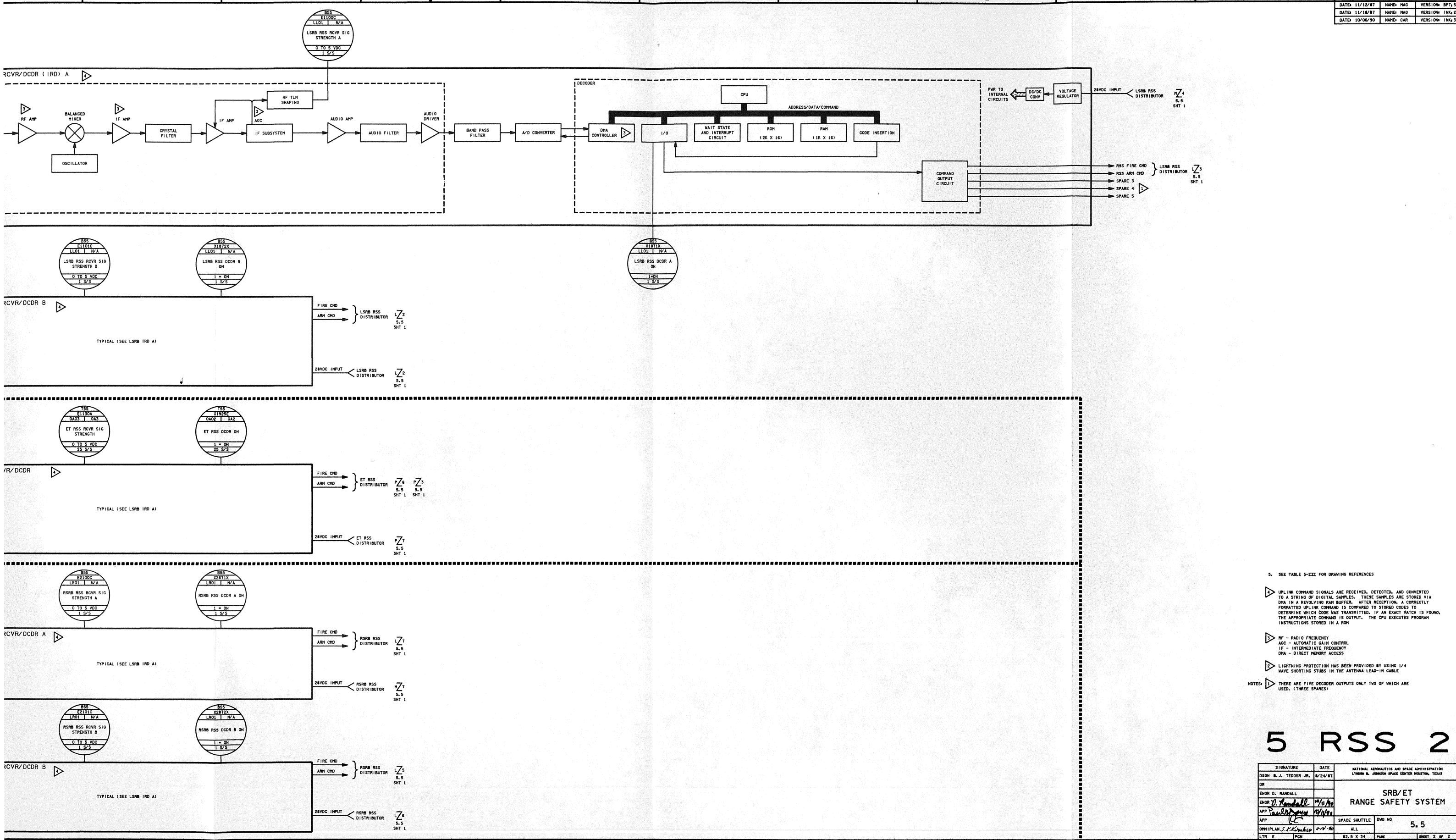

DATE: 11/12/87	NAME: MAG	VERSION: BPT; 5
DATE: 11/18/87	NAME: MAG	VERSION: INK; 2
DATE: 10/06/90	NAME: CAR	VERSION: INK; 3

5. SEE TABLE 5-XII FOR DRAWING REFERENCES

4 UPLINK COMMAND SIGNALS ARE RECEIVED, DETECTED, AND CONVERTED TO A STRING OF DIGITAL SAMPLES. THESE SAMPLES ARE STORED VIA DMA IN A REVOLVING RAM BUFFER. AFTER RECEPTION, A CORRECTLY FORMATTED UPLINK COMMAND IS COMPARED TO STORED CODES TO DETERMINE WHICH CODE WAS TRANSMITTED. IF AN EXACT MATCH IS FOUND, THE APPROPRIATE COMMAND IS OUTPUT. THE CPU EXECUTES PROGRAM INSTRUCTIONS STORED IN A ROM

3 RF - RADIO FREQUENCY
AGC - AUTOMATIC GAIN CONTROL
IF - INTERMEDIATE FREQUENCY
DMA - DIRECT MEMORY ACCESS

2 LIGHTNING PROTECTION HAS BEEN PROVIDED BY USING 1/4 WAVE SHORTING STUBS IN THE ANTENNA LEAD-IN CABLE

NOTES: 1 THERE ARE FIVE DECODER OUTPUTS ONLY TWO OF WHICH ARE USED. (THREE SPARES)

5 RSS 2

SIGNATURE	DATE	NATIONAL AERONAUTICS AND SPACE ADMINISTRATION LYNDON B. JOHNSON SPACE CENTER HOUSTON, TEXAS
DSGN B. J. TEDDER JR.	8/24/87	
DR		SRB/ET RANGE SAFETY SYSTEM
ENGR D. RANDALL		
ENGR D. Randall	10/11/90	
APP Paul Gryce	10/11/90	
APP		SPACE SHUTTLE ALL — DWG NO 5.5
OMNIPLAN S. K. Kimber	10-14-90	
LTR E — PCN		82.5 X 34 — PAGE — SHEET 2 OF 2

BASIC REV E

DATE: 10/06/90 | NAME: CAR | VERSION: INK3

0 N M L K J I H

8 7 6 5 4 3 2 1

LEFT SOLID ROCKET BOOSTER

EXTERNAL TANK

RIGHT SOLID ROCKET BOOSTER

BASIC REV E

RSS COMMAND ANTENNA B

RSS COMMAND ANTENNA A

DIRECTIONAL COUPLER

HYBRID COUPLER

GSE INPUT

50 OHM TERM

LSRB INTEGRATED RCVR/DCDR (IRD) A

RECEIVER

PRESELECTOR

RF AMP

BALANCED MIXER

OSCILLATOR

IF AMP

CRYSTAL FILTER

IF AMP

AGC

RF TLM SHAPING

IF SUBSYSTEM

AUDIO AMP

AUDIO FILTER

AUDIO DRIVER

BAND PASS FILTER

BSS E1100C | LLO1 | N/A | LSRB RSS RCVR SIG STRENGTH A | 0 TO 5 VDC | 1 S/S

BSS E1101C | LLO1 | N/A | LSRB RSS RCVR SIG STRENGTH B | 0 TO 5 VDC | 1 S/S

BSS X1872X | LLO1 | N/A | LSRB RSS DCDR B ON | 1 = ON | 1 S/S

LSRB INTEGRATED RCVR/DCDR B

TYPICAL (SEE LSRB IRD A)

FIRE CMD

ARM CMD

LSRB RSS DISTRIBUTOR

Z2 5.5 SHT 1

28VDC INPUT

LSRB RSS DISTRIBUTOR

Z2 5.5 SHT 1

T55 E1130A | OA03 | OA3 | ET RSS RCVR SIG STRENGTH | 0 TO 5 VDC | 25 S/S

T55 X1925E | OA02 | OA2 | ET RSS DCDR ON | 1 = ON | 25 S/S

ET INTEGRATED RCVR/DCDR

TYPICAL (SEE LSRB IRD A)

FIRE CMD

ARM CMD

ET RSS DISTRIBUTOR

Z6 5.5 SHT 1

Z3 5.5 SHT 1

28VDC INPUT

ET RSS DISTRIBUTOR

Z7 5.5 SHT 1

BSS E2100C | LRO1 | N/A | RSRB RSS RCVR SIG STRENGTH A | 0 TO 5 VDC | 1 S/S

BSS X2871X | LRO1 | N/A | RSRB RSS DCDR A ON | 1 = ON | 1 S/S

RSRB INTEGRATED RCVR/DCDR A

TYPICAL (SEE LSRB IRD A)

FIRE CMD

ARM CMD

RSRB RSS DISTRIBUTOR

Z7 5.5 SHT 1

28VDC INPUT

RSRB RSS DISTRIBUTOR

Z7 5.5 SHT 1

BSS E2101C | LRO1 | N/A | RSRB RSS RCVR SIG STRENGTH B | 0 TO 5 VDC | 1 S/S

BSS X2873X | LRO1 | N/A | RSRB RSS DCDR B ON | 1 = ON | 1 S/S

RSRB INTEGRATED RCVR/DCDR B

TYPICAL (SEE LSRB IRD A)

FIRE CMD

ARM CMD

RSRB RSS DISTRIBUTOR

Z5 5.5 SHT 1

28VDC INPUT

RSRB RSS DISTRIBUTOR

Z6 5.5 SHT 1

TABLE 5-I.- PRIMARY C/W PARAMETER PROM LIMITS

C/W Annunciator Loc	Title	Primary C/W No.	MML no.	Title	PROM limits (V dc/eng units)[a] Lower	Upper	Minimum change increment[b]	Backup C/W alarm MML no.
1A	O2 PRESS	0	V45P1110A	O2 TK 1 P	0.25/540	4.70/985	5 psia	Same
		10	V45P1210A	O2 TK 2 P	0.25/540	4.70/985	5 psia	Same
		20[c]	V45P1310A	O2 TK 3 P	0.25/540	4.70/985	5 psia	Same
		30[c]	V45P1410A	O2 TK 4 & 5 P	0.25/540	4.70/985	5 psia	Same
		40[c,d]	V45P1510A	O2 TK 5 P	0.25/540	4.70/985	5 psia	Same
1B	H2 PRESS	50	V45P2110A	H2 TK 1 P	0.25/153	4.65/294	1.6 psia	Same
		60	V45P2210A	H2 TK 2 P	0.25/153	4.65/294	1.6 psia	Same
		70[c]	V45P2310A	H2 TK 3 P	0.25/153	4.65/294	1.6 psia	Same
		80[c]	V45P2410A	H2 TK 4 & 5 P	0.25/153	4.65/294	1.6 psia	Same
		90[c,d]	V45P2510A	H2 TK 5 P	0.25/153	4.65/294	1.6 psia	Same
1C	FUEL CELL REAC	2	V45X1150E	FC1 O2 VLV CLOSED	4.80/0	LL	28 V BL	Same
		12	V45X2150E	FC1 H2 VLV CLOSED	4.80/0	LL	28 V BL	Same
		22	V45X1155E	FC2 O2 VLV CLOSED	4.80/0	LL	28 V BL	Same
		32	V45X2155E	FC2 H2 VLV CLOSED	4.80/0	LL	28 V BL	Same
		42	V45X1160E	FC3 O2 VLV CLOSED	4.80/0	LL	28 V BL	Same
		52	V45X2160E	FC3 H2 VLV CLOSED	4.80/0	LL	28 V BL	Same
1D	FUEL CELL STACK TEMP	62	V45T0120A	FC1 STACK TEMP	3.30/173	4.25/244	3.75° F	Same
		72	V45T0220A	FC2 STACK TEMP	3.30/173	4.25/244	3.75° F	Same
		82	V45T0320A	FC3 STACK TEMP	3.30/173	4.25/244	3.75° F	Same
1E	FUEL CELL PUMP	92	V45X0143E	FC1 PUMP ΔP LOW	4.80/0	LL	28 V BL	Same
		102	V45X0243E	FC2 PUMP ΔP LOW	4.80/0	LL	28 V BL	Same
		112	V45X0343E	FC3 PUMP ΔP LOW	4.80/0	LL	28 V BL	Same
2A	CABIN ATM	4[c]	V61P2405A	CABIN PRESS	3.45/[e]	3.80/[f]	0.2 psia	Same
		14	V61R2105A	SYS 1 O2 FLOW	HL	4.90/4.9	0.05 lb/h	Same
		24	V61R2205A	SYS 2 O2 FLOW	HL	4.90/4.9	0.05 lb/h	Same
		34[c]	V61P2511A	O2 PP A	2.70/2.70	3.60/3.60	0.05 psia	Same
		44[c]	V61P2513A	O2 PP B	2.70/2.70	3.60/3.60	0.05 psia	Same
		54	V61R2553A	SYS 1 GN2 FLOW	HL	4.90/4.9	0.05 lb/h	Same
		64	V61R2554A	SYS 2 GN2 FLOW	HL	4.90/4.9	0.05 lb/h	Same
2B	O2 HEATER TEMP	1	V45T1107A	O2 TK 1 HTR 1 T	HL	4.30/349	9° F	Same
		11	V45T1109A	O2 TK 1 HTR 2 T	HL	4.30/349	9° F	Same
		21	V45T1207A	O2 TK 2 HTR 1 T	HL	4.30/349	9° F	Same
		31	V45T1209A	O2 TK 2 HTR 2 T	HL	4.30/349	9° F	Same
		41	V45T1307A	O2 TK 3 HTR 1 T	HL	4.30/349	9° F	Same
		51	V45T1309A	O2 TK 3 HTR 2 T	HL	4.30/349	9° F	Same
		61	V45T1407A	O2 TK 4 HTR 1 T	HL	4.30/349	9° F	Same
		71	V45T1409A	O2 TK 4 HTR 2 T	HL	4.30/349	9° F	Same
		81[d]	V45T1507A	O2 TK 5 HTR 1 T	HL	4.30/349	9° F	Same

[a] Parameters with HL in lower limit column are high limit only channels (fixed by the PROM) and both limits (lower and upper) are high limit tested. For normal limit changes on high limit only channels, only the upper limit need be changed as the PROM lower limit is 5.00 volts. Parameters with LL in upper limit column are low limit only channels and both upper and lower limits are low limit tested. For limit changes down to 0.10 volt on low limit only channels, only the lower limit need be changed as the PROM upper limit is 0.10 volt. Engineering units correspond to specification calibration curve values. Refer to specific vehicle calibration curve for true value.

[b] The minimum change increment is the engineering unit value associated with a panel R13 limit set value thumbwheel setting change of 0.05 volt for analog parameters. Bilevel parameters are indicated as 5 volts or 28 volts.

[c] Reference table 5-II for parameter flight values and inhibit status.

[d] OV-105 only.

[e] 13.66 for OV-102 13.71 for OV-104
13.42 for OV-103 13.78 for OV-105

[f] 15.02 for OV-102 15.10 for OV-104
14.80 for OV-103 15.17 for OV-105

TABLE 5-I.- Continued

C/W Annunciator Loc	Title	Primary C/W No.	MML no.	Title	PROM limits (V dc/eng units)[a] Lower	Upper	Minimum change increment[b]	Backup C/W alarm MML no.
2C	MAIN BUS UNDERVOLT	3	V76V0101A	MN A BUS U/V	3.30/26.4	LL	0.4 V dc	V76V0100A
		13	V76V0201A	MN B BUS U/V	3.30/26.4	LL	0.4 V dc	V76V0200A
		23	V76V0301A	MN C BUS U/V	3.30/26.4	LL	0.4 V dc	V76V0300A
2D	AC VOLTAGE	33	V76X1505E	AC1 BUS O/V - U/V	HL	5.00/28	28 V BL	V76V1500A V76V1501A V76V1502A
		43	V76X1605E	AC2 BUS O/V - U/V	HL	5.00/28	28 V BL	V76V1600A V76V1601A V76V1602A
		53	V76X1705E	AC3 BUS O/V - U/V	HL	5.00/28	28 V BL	V76V1700A V76V1701A V76V1702A
2E	AC OVERLOAD	63	V76X1506E	AC1 BUS OVERLOAD	HL	5.00/28	28 V BL	Same
		73	V76X1606E	AC2 BUS OVERLOAD	HL	5.00/28	28 V BL	Same
		83	V76X1706E	AC3 BUS OVERLOAD	HL	5.00/28	28 V BL	Same
3A	FREON LOOP	106[c]	V63R1100A	FCL 1 FLOW	1.00/1287	LL	26 lb/h[g]	Same
		107[c]	V63T1207A	FCL 1 EVAP OUT T	0.35/32.25	1.90/64.9	0.08° F	Same
		116[c]	V63R1300A	FCL 2 FLOW	1.00/1287	LL	26 lb/h[g]	Same
		117[c]	V63T1407A	FCL 2 EVAP OUT T	0.35/32.35	1.90/64.9	0.08° F	Same
3B	AV BAY/ CABIN AIR	74[c]	V61P2556A	CABIN FAN ΔP	1.75/2.8	4.40/7.04	0.08 IN H_2O	Same
		84	V61T2645A	AV BAY 1 OUT AIR T	HL	4.25/130	1° F	Same
		94	V61T1650A	AV BAY 2 OUT AIR T	HL	4.25/130	1° F	Same
		104	V61T1661A	AV BAY 3 OUT AIR T	HL	4.25/130	1° F	Same
		114	V61T2635A	CABIN HX OUT AIR T	HL	5.00/145	1° F	Same
3C	IMU	103	V72X4560X	IMU FAIL	HL	2.50/5	5 V BL	Same
3D	FWD RCS	6	V42P1115C	RCS-F OX TK ULL P	2.50/200	3.90/312	4 psia	Same
		16	V42P1116C	RCS-F FU TK ULL P	2.50/200	3.90/312	4 psia	Same
		26	V72X6035X	RCS-F LEAK/ULL P	HL	2.50/5	5 V BL	Same
3E	RCS JET	96	V72X4545X	RCS JET FAIL	HL	2.50/5	5 V BL	Same
4A	H2O LOOP	105	V61P2600A	LOOP 1 H2O PUMP P	0.65/19.5	2.65/79.5	1.5 psia	Same
		115	V61P2700A	LOOP 2 H2O PUMP P	1.50/45	2.70/81.0	1.5 psia	Same
4B	RGA/ACCEL	93	V72X4590X	RGA/ACCEL FAIL	HL	2.50/5	5 V BL	Same
4C	AIR DATA	91	V72X4580X	NAV SENSOR FAIL	HL	2.50/5	5 V BL	Same
4D	LEFT RCS	36	V42P2115C	RCS-L OX TK ULL P	2.50/200	3.90/312	4 psia	Same
		46	V42P2116C	RCS-L FU TK ULL P	2.50/200	3.90/312	4 psia	Same
		56	V72X6036X	RCS-L LEAK/ULL P	HL	2.50/5	5 V BL	Same

[a] Parameters with HL in lower limit column are high limit only channels (fixed by the PROM) and both limits (lower and upper) are high limit tested. For normal limit changes on high limit only channels, only the upper limit need be changed as the PROM lower limit is 5.00 volts. Parameters with LL in upper limit column are low limit only channels and both upper and lower limits are low limit tested. For limit changes down to 0.10 volt on low limit only channels, only the lower limit need be changed as the PROM upper limit is 0.10 volt. Engineering units correspond to specification calibration curve values. Refer to specific vehicle calibration curve for true value.

[b] The minimum change increment is the engineering unit value associated with a panel R13 limit set value thumbwheel setting change of 0.05 volt for analog parameters. Bilevel parameters are indicated as 5 volts or 28 volts.

[c] Reference table 5-II for parameter flight values and inhibit status..

[g] Nonlinear calibration, average change increment.

TABLE 5-I.- Continued

C/W Annunciator Loc	Title	Primary C/W No.	MML no.	Title	PROM limits (V dc/eng units)[a] Lower	Upper	Minimum change increment[b]	Backup C/W alarm MML no.
4E	RIGHT RCS	66	V42P3115C	RCS-R OX TK ULL P	2.50/200	3.90/312	4 psia	Same
		76	V42P3116C	RCS-R FU TK ULL P	2.50/200	3.90/312	4 psia	Same
		86	V72X6037X	RCS-R LEAK/ULL P	HL	2.50/5	5 V BL	Same
5A	--------	113		SPARE	HL	2.50/		Same
5B	LEFT RHC	100	V72X4575X	LEFT RHC FAIL	HL	2.50/5	5 V BL	Same
5C	RIGHT/AFT RHC	110	V72X4570X	RIGHT/AFT RHC FAIL	HL	2.50/5	5 V BL	Same
5D	LEFT OMS	7[c]	V43P4221C	OMS-L OX TK ULL P	2.90/232	3.55/284	4 psia	Same
		17[c]	V43P4321C	OMS-L FU TK ULL P	2.90/232	3.55/284	4 psia	Same
		27	V72X4547X	OMS-L ENG ABNORMAL	HL	2.50/5	5 V BL	Same
5E	RIGHT OMS	37[c]	V43P5221C	OMS-R OX TK ULL P	2.90/232	3.55/284	4 psia	Same
		47[c]	V43P5321C	OMS-R FU TK ULL P	2.90/232	3.55/284	4 psia	Same
		57	V72X4548X	OMS-R ENG ABNORMAL	HL	2.50/5	5 V BL	Same
6A	PAYLOAD WARNING	55	P01X5025E	P/L WARN 1	HL	2.50/		
		65	P01X5026E	P/L WARN 2	HL	2.50/		
		75	P01X5027E	P/L WARN 3	HL	2.50/		
		85	P01X5028E	P/L WARN 4	HL	2.50/		
		95	P01X5029E	P/L WARN 5	HL	2.50/		
6B	GPC	5	V72X7011E	GPC 1 FAIL	HL	2.50/5	5 V BL	Same
		15	V72X7012E	GPC 2 FAIL	HL	2.50/5	5 V BL	Same
		25	V72X7013E	GPC 3 FAIL	HL	2.50/5	5 V BL	Same
		35	V72X7014E	GPC 4 FAIL	HL	2.50/5	5 V BL	Same
		45	V72X7015E	GPC 5 FAIL	HL	2.50/5	5 V BL	Same
6C	FCS SATURATION	101	V72X4555X	FCS SATURATION	HL	2.50/5	5 V BL	Same
6D	OMS KIT	77[c]	V43P6221C	OMS-PBK OX TK ULL P	2.90/232	3.55/284	4 psia	Same
		87[c]	V43P6321C	OMS-PBK FU TK ULL P	2.90/232	3.55/284	4 psia	Same
6E	OMS TVC	67	V72X4546X	OMS TVC FAIL	HL	2.50/5	5 V BL	Same
7A	PAYLOAD CAUTION	97	V72X0001Y	P/L CAUTION	HL	2.50/5	5 V BL	Same
7B	PRIMARY C/W	--	--------	CWE SELF TEST FAIL	--	--	--	None
7C	FCS CHANNEL	111	V72X4550X	FCS CH BYPASS/FAIL	HL	2.50/5	5 V BL	Same

[a] Parameters with HL in lower limit column are high limit only channels (fixed by the PROM) and both limits (lower and upper) are high limit tested. For normal limit changes on high limit only channels, only the upper limit need be changed as the PROM lower limit is 5.00 volts. Parameters with LL in upper limit column are low limit only channels and both upper and lower limits are low limit tested. For limit changes down to 0.10 volt on low limit only channels, only the lower limit need be changed as the PROM upper limit is 0.10 volt. Engineering units correspond to specification calibration curve values. Refer to specific vehicle calibration curve for true value.

[b] The minimum change increment is the engineering unit value associated with a panel R13 limit set value thumbwheel setting change of 0.05 volt for analog parameters. Bilevel parameters are indicated as 5 volts or 28 volts.

[c] Reference table 5-II for parameter flight values and inhibit status.

TABLE 5-I.- Concluded

C/W Annunciator Loc	Title	Primary C/W No.	MML no.	Title	PROM limits (V dc/eng units)[a] Lower	Upper	Minimum change increment[b]	Backup C/W alarm MML no.
7D	MPS	9[c]	V41P1150A	MPS-C ENG He TK P	1.15/1150	LL	50 psia	Same
		19[c]	V41P1250A	MPS-L ENG He TK P	1.15/1150	LL	50 psia	Same
		29[c]	V41P1350A	MPS-R ENG He TK P	1.15/1150	LL	50 psia	Same
		39[c]	V41P1154A	MPS-C ENG He REG P	3.40/680	4.05/810	10 psia	SM alert
		49[c]	V41P1254A	MPS-L ENG He REG P	3.40/680	4.05/810	10 psia	SM alert
		59[c]	V41P1354A	MPS-R ENG He REG P	3.40/680	4.05/810	10 psia	SM alert
		69[c]	V41P1533C	MPS LO2 ENG MANF P	HL	4.15/249	3 psia	Same
		79[c]	V41P1433C	MPS LH2 ENG MANF P	HL	3.00/60	1 psia	Same
7E	----------	89		SPARE	HL	2.50/		
8A	BACKUP C/W ALARM	--	V72X4530X	BACKUP C/W A CMD 1	--	--		
		--	V72X4531X	BACKUP C/W A CMD 2	--	--		
		--	V72X4532X	BACKUP C/W A CMD 3	--	--		
		--	V72X4533X	BACKUP C/W A CMD 4	--	--		
		--	V72X4542X	BACKUP C/W B CMD 1	--	--		
			V72X4543X	BACKUP C/W B CMD 2	--	--		
8B	APU TEMP	8[c]	V46T0142A	APU 1 EGT	HL	4.20/1260	15° F	V46T0140A
		18[c]	V46T0242A	APU 2 EGT	HL	4.20/1260	15° F	V46T0240A
		28[c]	V46T0342A	APU 3 EGT	HL	4.20/1260	15° F	V46T0340A
		38	V46T0150A	APU 1 LUBE OIL T	HL	2.90/290	5° F	Same
		48	V46T0250A	APU 2 LUBE OIL T	HL	2.90/290	5° F	Same
		58	V46T0350A	APU 3 LUBE OIL T	HL	2.90/290	5° F	Same
8C	APU OVERSPEED	68	V46X0165E	APU 1 OVERSPEED	HL	5.00/28	28 V BL	V46R0135A
		78	V46X0265E	APU 2 OVERSPEED	HL	5.00/28	28 V BL	V46R0235A
		88	V46X0365E	APU 3 OVERSPEED	HL	5.00/28	28 V BL	V46R0335A
8D	APU UNDERSPEED	98	V46X0166E	APU 1 UNDERSPEED	HL	5.00/28	28 V BL	V46R0135A
		108	V46X0266E	APU 2 UNDERSPEED	HL	5.00/28	28 V BL	V46R0235A
		118	V46X0336E	APU 3 UNDERSPEED	HL	5.00/28	28 V BL	V46R0335A
8E	HYD PRESS	99[c]	V58P0114C	HYD SYS 1 P	3.00/2400	LL	40 psia	V58P0115A
		109[c]	V58P0214C	HYD SYS 2 P	3.00/2400	LL	40 psia	V58P0215A
		119[c]	V58P0314C	HYD SYS 3 P	3.00/2400	LL	40 psia	V58P0315A

[a] Parameters with HL in lower limit column are high limit only channels (fixed by the PROM) and both limits (lower and upper) are high limit tested. For normal limit changes on high limit only channels, only the upper limit need be changed as the PROM lower limit is 5.00 volts. Parameters with LL in upper limit column are low limit only channels and both upper and lower limits are low limit tested. For limit changes down to 0.10 volt on low limit only channels, only the lower limit need be changed as the PROM upper limit is 0.10 volt. Engineering units correspond to specification calibration curve values. Refer to specific vehicle calibration curve for true value.

[b] The minimum change increment is the engineering unit value associated with a panel R13 limit set value thumbwheel setting change of 0.05 volt for analog parameters. Bilevel parameters are indicated as 5 volts or 28 volts.

[c] Reference table 5-II for parameter flight values and inhibit status.

TABLE 5-I		
	SIGNATURE	DATE
ENGR	B. PAWLIK	
ENGR	Benjamin Schmidt	9/3/93
APP	Paul Mance	9/7/93

TABLE 5-II.- SCHEDULED PRIMARY C/W PARAMETER INHIBIT AND LIMIT CHANGES

Time	MML No.	Primary C/W No.	Primary C/W Title	INH/ ENA	New limit (V dc/EU) Lower	Upper	Units
Prelaunch	V61P2405A	004	CABIN PRESS (OV-102)		3.45/13.66	3.90/15.41	psia
			(OV-103)		3.55/13.82	3.95/15.40	psia
			(OV-104)		3.45/13.71	3.90/15.50	psia
			(OV-105)		3.45/13.78	3.85/15.37	psia
	V61P2556A	074	CABIN FAN ΔP		2.65/4.20	4.25/6.80	in. H_2O
	V45P1310A[a]	020	02 TK 3 P	INH			
	V45P1410A[a]	030	02 TK 4 & 5 P	INH			
	V45P1510A[b]	040	02 TK 5 P	INH			
	V45P2310A[a]	070	H2 TK 3 P	INH			
	V45P2410A[a]	080	H2 TK 4 & 5 P	INH			
	V45P2510A[b]	090	H2 TK 5 P	INH			
	V45T1407A	061	02 HTR 1 TK 4[a]	INH			
	V45T1409A	071	02 HTR 2 TK 4[a]	INH			
	V45T1507A	081	02 HTR 1 TK 5[b]	INH			
	V43P4221C	007	OMS-L OX TK ULL P			3.60/288	psia
	V43P4321C	017	OMS-L FU TK ULL P			3.60/288	psia
	V43P5221C	037	OMS-R OX TK ULL P			3.60/288	psia
	V43P5321C	047	OMS-R FU TK ULL P			3.60/288	psia
	V43P6221C[a]	077	OMS-PBK OX TK ULL P	INH			
	V43P6321C[a]	087	OMS-PBK FU TK ULL P	INH			
	V46T0142A	008	APU 1 EGT	INH			
	V46T0242A	018	APU 2 EGT	INH			
	V46T0342A	028	APU 3 EGT	INH			
	V63R1100A	106	FCL 1 FLOW		0.80/1186		lb/h
	V63R1300A	116	FCL 2 FLOW		0.80/1186		lb/h
	V63T1207A	107	FCL 1 EVAP OUT T			4.30/115	°F
	V63T1407A	117	FCL 2 EVAP OUT T			4.30/115	°F
Postinsertion	V41P1150C	009	MPS-C He TK P	INH			
	V41P1250C	019	MPS-L He TK P	INH			
	V41P1350C	029	MPS-R He TK P	INH			
	V41P1154A	039	MPS-C He REG P	INH			
	V41P1254A	049	MPS-L He REG P	INH			
	V41P1354A	059	MPS-R He REG P	INH			
	V58P0114C	099	HYD SYS 1 P	INH			
	V58P0214C	109	HYD SYS 2 P	INH			
	V58P0314C	119	HYD SYS 3 P	INH			
	V61P2405A	004	CABIN PRESS (OV-102)			3.85/15.22	psia
			(OV-103)			3.90/15.20	psia
			(OV-104)			3.85/15.30	psia
			(OV-105)			3.80/15.17	psia
	V63T1207A	107	FCL 1 EVAP OUT T			1.90/64.8	°F
	V63T1407A	117	FCL 2 EVAP OUT T			1.90/64.8	°F
Predeorbit	V58P0114C	099	HYD SYS 1 P	ENA			
	V58P0214C	109	HYD SYS 2 P	ENA			
	V58P0314C	119	HYD SYS 3 P	ENA			
	V41P1154A	039	MPS-C He REG P	ENA			psia
	V41P1254A	049	MPS-L He REG P	ENA	.030/60.0		psia
	V41P1354A	059	MPS-R He REG P	ENA	.030/60.0		psia
	V41P1533C	069	MPS MANF P LO2	INH	.030/60.0		
	V41P1433C	079	MPS MANF P LH2	INH			

[a]When kit is not installed.
[b]Unless OV-105 and TK 5 flown.

TABLE 5-II		
	SIGNATURE	DATE
ENGR	B. PAWLIK	
ENGR	[signature]	9/3/93
APP	[signature]	9/9/93

TABLE 5-II.- SCHEDULED PRIMARY C/W PARAMETER INHIBIT AND LIMIT CHANGES

Time	MML No.	Primary C/W No.	Primary C/W Title	INH/ ENA	New limit (V dc/EU) Lower	Upper	Units
Prelaunch	V61P2405A	004	CABIN PRESS (OV-102)			3.90/15.41	psia
			(OV-103)			3.90/15.54	psia
			(OV-104)			3.80/15.38	psia
	V61P2556A	074	CABIN FAN ΔP		2.65/4.20	4.25/6.80	in. H_2O
	V45P1310A[a]	020	O2 TK 3 P	INH			
	V45P1410A[a]	030	O2 TK 4 & 5 P	INH			
	V45P2310A[a]	070	H2 TK 3 P	INH			
	V45P2410A[a]	080	H2 TK 4 & 5 P	INH			
	V43P4221C	007	OMS-L OX TK ULL P			3.60/288	psia
	V43P4321C	017	OMS-L FU TK ULL P			3.60/288	psia
	V43P5221C	037	OMS-R OX TK ULL P			3.60/288	psia
	V43P5321C	047	OMS-R FU TK ULL P			3.60/288	psia
	V43P6221C[a]	077	OMS-PBK OX TK ULL P	INH			
	V43P6321C[a]	087	OMS-PBK FU TK ULL P	INH			
	V46T0142A	008	APU 1 EGT	INH			
	V46T0242A	018	APU 2 EGT	INH			
	V46T0342A	028	APU 3 EGT	INH			
	V63R1100A	106	FCL 1 FLOW			0.08/1186	lb/h
	V63R1300A	116	FCL 2 FLOW			0.80/1186	lb/h
	V63T1207A	107	FCL 1 EVAP OUT T			4.30/115	°F
	V63T1407A	117	FCL 2 EVAP OUT T			4.30/115	°F
Postinsertion	V41P1150C	009	MPS-C He TK P	INH			
	V41P1250C	019	MPS-L He TK P	INH			
	V41P1350C	029	MPS-R He TK P	INH			
	V41P1154A	039	MPS-C He REG P	INH			
	V41P1254A	049	MPS-L He REG P	INH			
	V41P1354A	059	MPS-R He REG P	INH			
	V58P0114C	099	HYD SYS 1 P	INH			
	V58P0214C	109	HYD SYS 2 P	INH			
	V58P0314C	119	HYD SYS 3 P	INH			
	V61P2405A	004	CABIN PRESS (OV-102)		3.45/13.66	3.85/15.22	psia
			(OV-103)		3.45/13.74	3.85/15.34	psia
			(OV-104)		3.40/13.79	3.80/15.38	psia
	V63T1207A	107	FCL 1 EVAP OUT T			1.90/64.8	°F
	V63T1407A	117	FCL 2 EVAP OUT T			1.90/64.8	°F
Predeorbit	V58P0114C	099	HYD SYS 1 P	ENA			
	V58P0214C	109	HYD SYS 2 P	ENA			
	V58P0314C	119	HYD SYS 3 P	ENA			
	V41P1154A	039	MPS-C He REG P	ENA	.030/60.0		psia
	V41P1254A	049	MPS-L He REG P	ENA	.030/60.0		psia
	V41P1354A	059	MPS-R He REG P	ENA	.030/60.0		psia
	V41P1533C	069	MPS MANF P LO2	INH			
	V41P1433C	079	MPS MANF P LH2	INH			

[a]When kit is not installed.

TABLE 5-II		
	SIGNATURE	DATE
ENGR	B. PAWLIK	
ENGR	Benjamin Pawlik	10/29/91
APP	Patrick M Joyce	10/31/91

FOR DETAILED COMPONENT AND LOGIC INFORMATION REFER TO:

SSSH DWG NO.	SSSH DWG TITLE	VENDOR NAME	VENDOR DWG NO.	VENDOR SHEET NO.	REV	DATE	VENDOR DRAWING TITLE
5.1	SMOKE DETECTION AND FIRE SUPPRESSION	R. I. - DOWNEY	VS70-620109	1 - 6	D	2/21/89	SCHEMATIC DIAGRAM - SMOKE DETECTOR/FIRE EXTINGUISHING
		R. I.	V070-623420	1	B	9/13/88	CM SYSTEM INSTL SMOKE DETECTION & FIRE SUPPRESSION
		R. I.	VS70-960099	68 - 73	A12	1/24/89	SMOKE DETECTOR SUBSYSTEM
		SODB	JSC-08934	4.6.5	D AMEND-MENT 193		
5.2 (SHEETS 1-2)	CAUTION/WARNING OVERVIEW	R.I.	VS70-973099	27-34	A/B03	4/25/90	INTEGRATED SYSTEM SCHEMATICS ORBITER OV-099 DISPLAYS AND CONTROLS
		R.I.	VS70-730622	1-7	A	9/1/83	SCHEMATIC DIAGRAM - CAUTION & WARNING SUBSYSTEM
5.4	SOLID ROCKET BOOSTER RECOVERY	R.I.	VS72-948099	35	A	3/26/90	LSRB RCVY: MAIN CHUTE DEPLOY
				36			LSRB RCVY: NOSE CAP RELEASE
				37			LSRB RCVY: NOZZLE JETTISON
				38			LSRB RCVY: CAP VOLT, LOAD TEST, RTST OK
				39			RSRB RCVY: MAIN CHUTE DEPLOY
				40			RSRB RCVY: NOSE CAP RELEASE
				41			RSRB RCVY: NOZZLE JETTISON
				42			RSRB RCVY: CAP VOLT, LOAD TEST, RTST OK
5.5	SRB/ET RANGE	MSFC	10A00570			7/83	RSS HANDBOOK FOR SRB/ET
(SHEET 1)	SAFETY SYSTEM						
		R. I.	VS72-948099	16	A15	3/26/90	RSS A POWER CNTL & MON
				17			RSS B POWER CNTL & MON
				18			LSRB RSS A CONT & MON
				19			RSRB RSS A CONT & MON
				20			LSRB RSS B CONT & MON
				21			RSRB RSS B CONT & MON
				22			LSRB RSS S & A DEVICE
				23			RSRB RSS S & A DEVICE
				46			ET POWER DISTR BUS A & C
				48			ET RSS A CONT & MON FIRE A
				49			ET RSS A CONT & MON ARM A
				50			ET RSS A CONT & MON PIC A
				51			ET RSS B CONT & MON FIRE B
				52			ET RSS B CONT & MON ARM B
				53			ET RSS B CONT & MON PIC B
				54			ET RSS S & A DEVICE
5.5 (SHEET 2)	SRB/ET RANGE SAFETY SYSTEM	R.I.	VS72-948099	16	A15	3/26/90	RSS A POWER CNTL & MON
				17			RSS B POWER CNTL & MON
				18			LSRB RSS A CONT & MON
				19			RSRB RSS A CONT & MON
				20			LSRB RSS B CONT & MON
				21			RSRB RSS B CONT & MON
				47			ET RSS RF A & B CONT
		CINCINNATI ELECTRONICS CORP.	MSFC CONTRACT #NAS8-33440			12/80	INTEGRATED RECEIVER/DECODER TECHNICAL MANUAL
		MSFC	10A00570			7/83	RSS HANDBOOK FOR SRB/ET

DWG	SIGNATURE	DATE	DWG	SIGNATURE	DATE
5.1	ENGR M. FITZPATRICK			ENGR	
	ENGR Michael W. Fitzpatrick	10/29/90		ENGR	
5.2-1,2	ENGR B. PAWLIK			ENGR	
	ENGR Benjamin Pawlik	10/25/90		ENGR	
5.4	ENGR D. RANDALL			APP Mark J. Jenkins	10/29/90
	ENGR David Randall	10/29/90		APP Paul M. Boyle	10/29/90
5.5-1,2	ENGR D. RANDALL			OMNIPLAN	
	ENGR David Randall	10/29/90		LTR E PCN	

NATIONAL AERONAUTICS AND SPACE ADMINISTRATION
LYNDON B. JOHNSON SPACE CENTER HOUSTON, TEXAS

VENDOR DRAWING REFERENCES

SPACE SHUTTLE ALL

TBL NO 5-III

PAGE 5.III-1

SHEET 1 OF 1

*U.S.GOVERNMENT PRINTING OFFICE:1990-561-057/20054

BASIC REV E

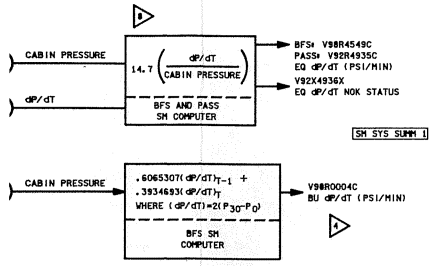

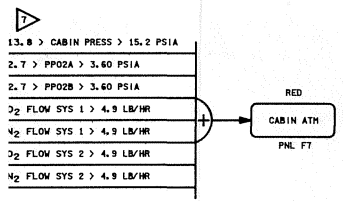

N_2 TANK CONFIGURATION

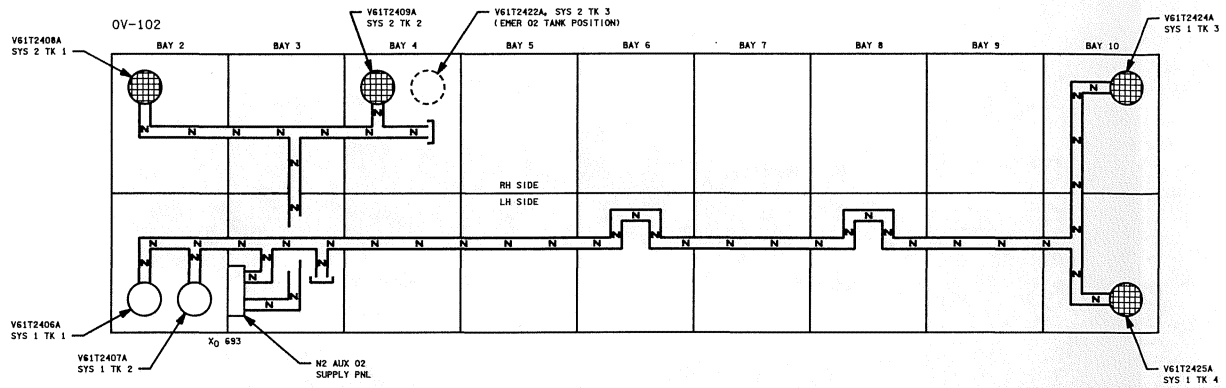

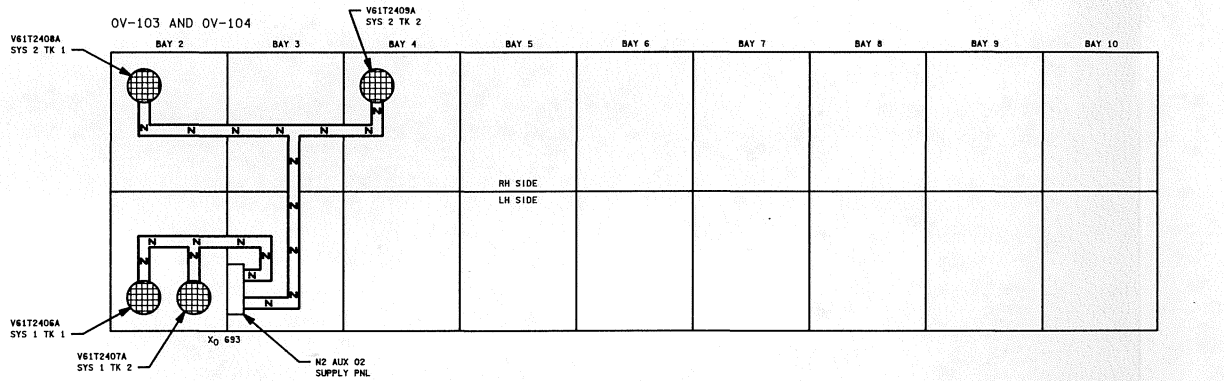

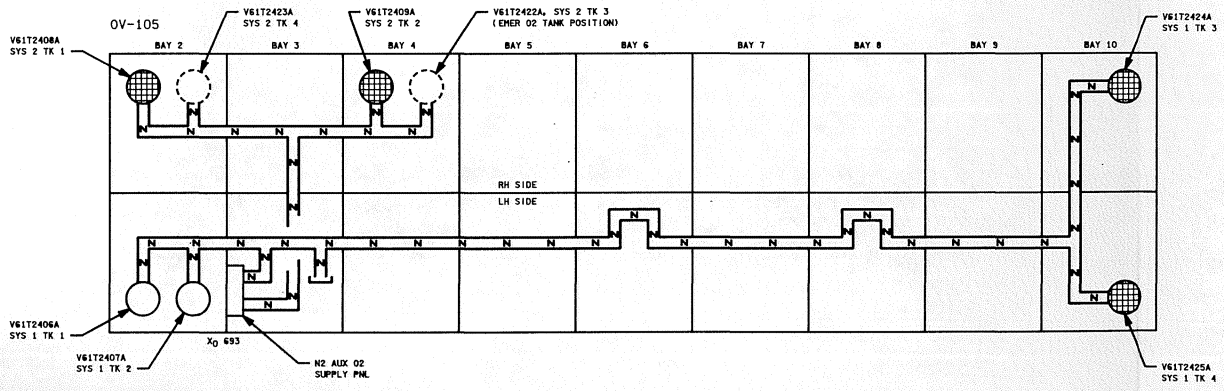

IBIT PARAMETERS	
MSID	NOMINAL STATUS
V2J2131C	1
V2J2132C	1
V2J2133C	1

US: 1=ACTIVE/0=INACTIVE

2 QTY	COMP PARAMETERS
	DESCRIPTION
12.35	
	MANIFOLD PRES SYS 1 (V61P2301A)
	MANIFOLD PRES SYS 2 (V61P2309A)
	SYS 1 TANK 1 TEMP (V61T2406A)
	SYS 1 TANK 2 TEMP (V61T2407A)
	SYS 2 TANK 1 TEMP (V61T2408A)
	SYS 2 TANK 2 TEMP (V61T2409A)
	SYS 1 TANK 3 TEMP (V61T2424A)
	SYS 1 TANK 4 TEMP (V61T2425A)
	SYS 2 TANK 3 TEMP (V61T2422A)
	SYS 2 TANK 4 TEMP (V61T2423A)
	SYS 1 TANK 1 TEMP FLAG
	SYS 1 TANK 2 TEMP FLAG
	SYS 2 TANK 1 TEMP FLAG
	SYS 2 TANK 2 TEMP FLAG
	SYS 1 TANK 3 TEMP FLAG
	SYS 1 TANK 4 TEMP FLAG
	SYS 2 TANK 3 TEMP FLAG
	SYS 2 TANK 4 TEMP FLAG
	SYS 1 PRESS FLAG
	SYS 2 PRESS FLAG
	SYS 1 TANK 1 FLAG
	SYS 1 TANK 2 FLAG
	SYS 1 TANK 3 FLAG
	SYS 1 TANK 4 FLAG
	SYS 2 TANK 1 FLAG
	SYS 2 TANK 2 FLAG
	SYS 2 TANK 3 FLAG
	SYS 2 TANK 4 FLAG

LAGS: (1=ACTIVE/0=INACTIVE)

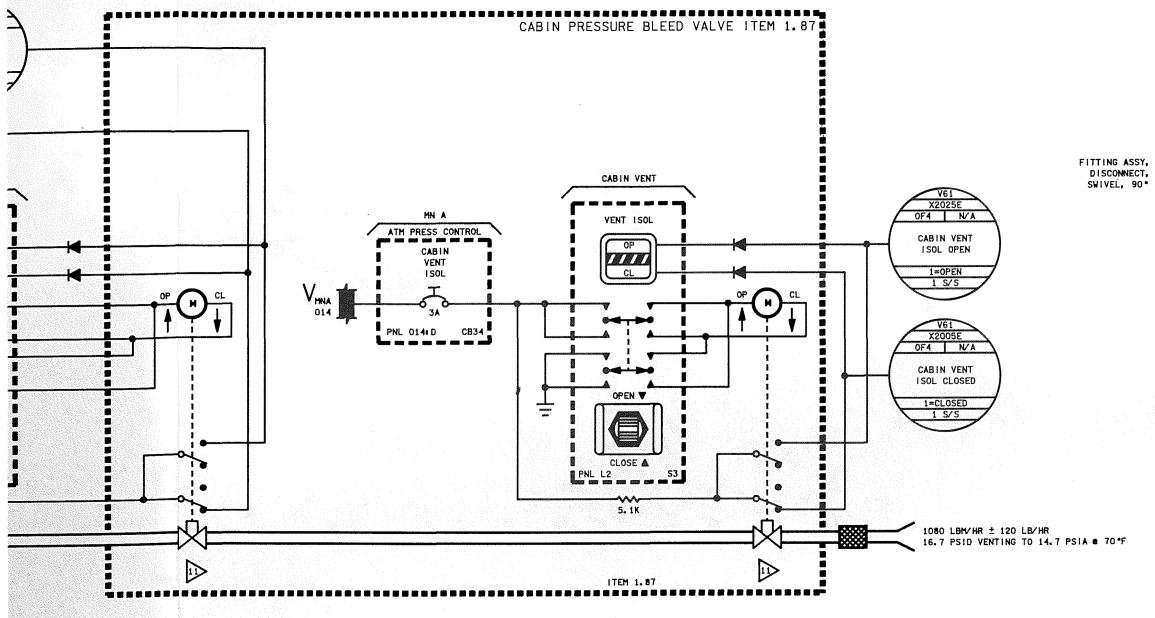

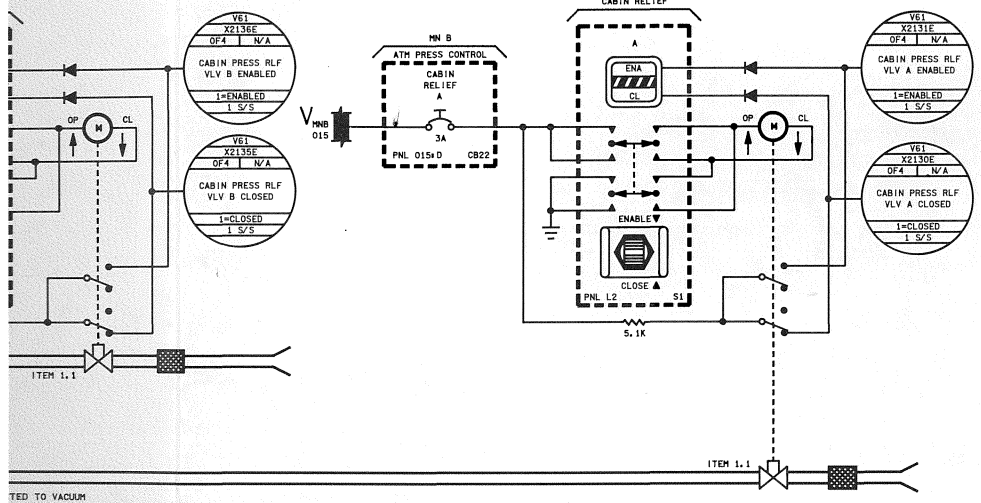

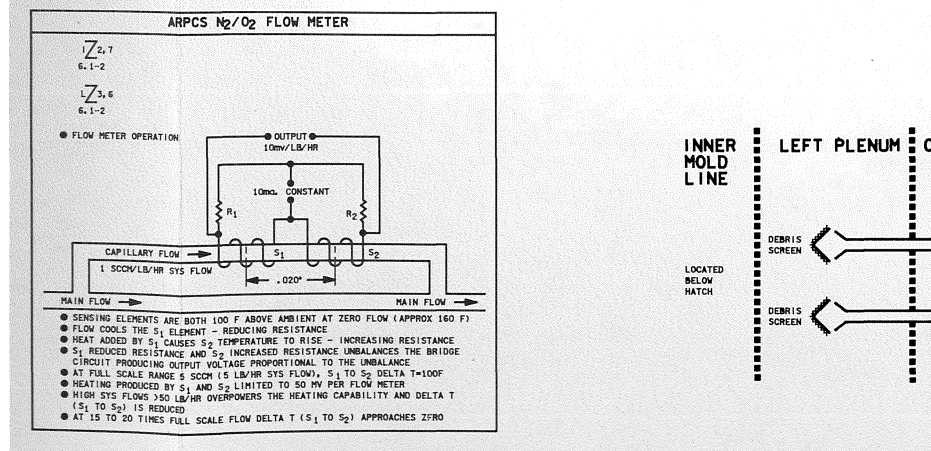

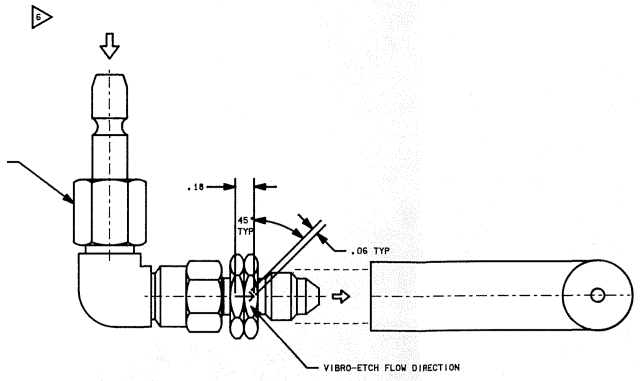

O_2 BLEED ORIFICE
EXTERNAL DETAILS

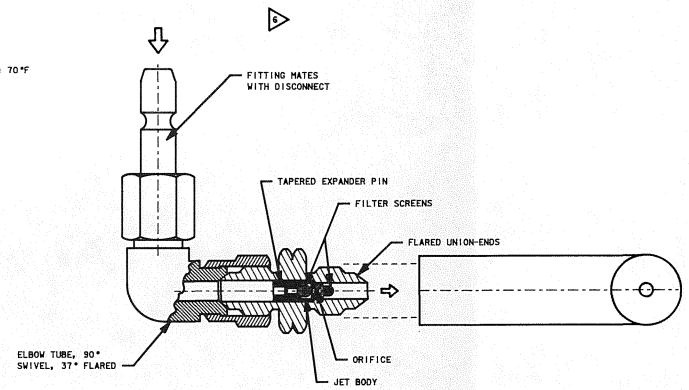

O_2 BLEED ORIFICE
INTERNAL DETAILS

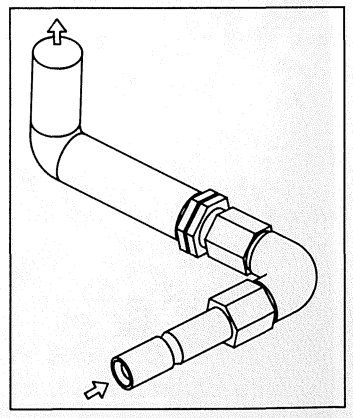

O_2 BLEED ORIFICE
OBLIQUE VIEW

O_2 BLEED ORIFICE SPEC FLOW RATES

CREW SIZE	O_2 SUPPLY PRESSURE PSIA	O_2 MASS FLOW RATE DESIRED	O_2 MASS FLOW RATE PROVIDED
4,5	110.2 ± 10	.24 LB/HR	0.254 +0.052 -0.034 LB/HR
6,7	110.2 ± 10	.36 LB/HR	0.363 +0.064 -0.048 LB/HR

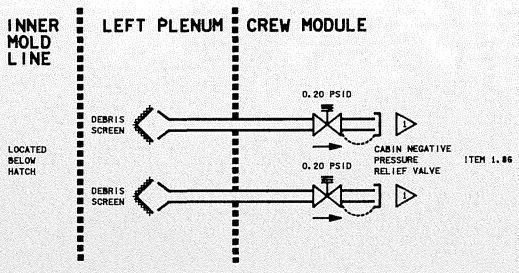

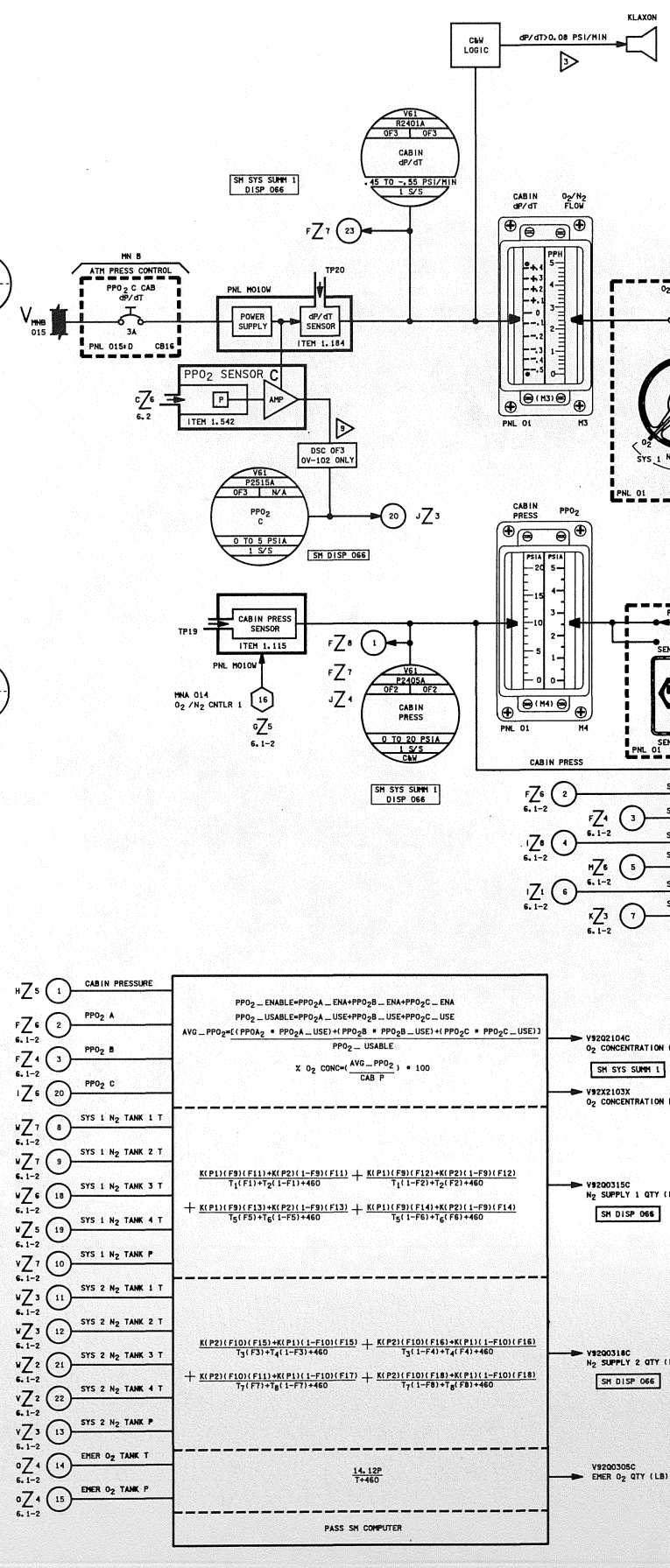

"___" INHIBIT PARAMETERS

PARAMETER	MSID	NOMINAL STATUS
PPO_2 A_ENA	V92J2131C	1
PPO_2 B_ENA	V92J2132C	1
PPO_2 C_ENA	V92J2133C	1

PARAMETER STATUS= 1=ACTIVE/0=INACTIVE

N_2 QTY COMP PARAMETERS

PARAMETER	DESCRIPTION
K	12.35
P1	MANIFOLD PRES SYS 1 (V61P2301A)
P2	MANIFOLD PRES SYS 2 (V61P2309A)
T_1	SYS 1 TANK 1 TEMP (V61T2406A)
T_2	SYS 1 TANK 2 TEMP (V61T2407A)
T_3	SYS 2 TANK 1 TEMP (V61T2408A)
T_4	SYS 2 TANK 2 TEMP (V61T2409A)
T_5	SYS 1 TANK 3 TEMP (V61T2424A)
T_6	SYS 1 TANK 4 TEMP (V61T2425A)
T_7	SYS 2 TANK 3 TEMP (V61T2422A)
T_8	SYS 2 TANK 4 TEMP (V61T2423A)
F1	SYS 1 TANK 1 TEMP FLAG
F2	SYS 1 TANK 2 TEMP FLAG
F3	SYS 2 TANK 1 TEMP FLAG
F4	SYS 2 TANK 2 TEMP FLAG
F5	SYS 1 TANK 3 TEMP FLAG
F6	SYS 1 TANK 4 TEMP FLAG
F7	SYS 2 TANK 3 TEMP FLAG
F8	SYS 2 TANK 4 TEMP FLAG
F9	SYS 1 PRESS FLAG
F10	SYS 2 PRESS FLAG
F11	SYS 1 TANK 1 FLAG
F12	SYS 1 TANK 2 FLAG
F13	SYS 1 TANK 3 FLAG
F14	SYS 1 TANK 4 FLAG
F15	SYS 2 TANK 1 FLAG
F16	SYS 2 TANK 2 FLAG
F17	SYS 2 TANK 3 FLAG
F18	SYS 2 TANK 4 FLAG

ALL FLAGS= (1=ACTIVE/0=INACTIVE)

DATE: 10/28/91	NAME: VSH	VERSION: BPT: 9
DATE: 11/06/91	NAME: VSH	VERSION: BPT: 10
DATE: 11/14/91	NAME: MDU	VERSION: INK: 8

TOTAL USE RATES AND BIT COUNT CHANGE RATES OF METABOLIC DATA FOR VARIOUS CREW SIZES

METABOLIC DATA	5 CREW			6 CREW			7 CREW			8 CREW		
	MIN	NOM	MAX	MIN	NOM	MAX	MIN	NOM	MAX	MIN	NOM	MAX
O2 USE, LB/HR	0.33	0.37	0.43	0.39	0.44	0.52	0.46	0.51	0.61	0.52	0.58	0.70
PPO2 DECAY, PSI/HR	0.025	0.028	0.033	0.03	0.034	0.04	0.035	0.039	0.046	0.04	0.045	0.052
O2 BIT DECR, MIN	48	43	36	40	35	30	34	30	26	30	27	23
CO2 PROD, LB/HR	0.39	0.44	0.54	0.47	0.53	.065	0.55	0.62	0.75	0.62	0.70	0.86
PPCO2 INCR, MMHG/HR*	1.12	1.26	1.53	1.34	1.51	1.84	1.57	1.76	2.15	1.79	2.02	2.45
.12 BIT INCR, MIN*	6.4	5.7	4.7	5.4	4.8	3.9	4.6	4.1	3.3	4.0	3.6	2.9

* WITHOUT CO_2 REMOVAL

MID FUSELAGE CREW MODULE
X_O = 576

CABIN PRESSURE BLEED VALVE ITEM 1.87

V61 X2065E OF4 N/A — CABIN VENT OPEN — 1=OPEN 1 S/S
V61 X2045E OF4 N/A — CABIN VENT CLOSED — 1=CLOSED 1 S/S

MN A — ATM PRESS CONTROL — CABIN VENT — 3A — PNL 014xD CB22
V_{MNA} 014

CABIN VENT — VENT — OP CL — OPEN — CLOSE — PNL L2 S4 — 5.1K

MN A — ATM PRESS CONTROL — CABIN VENT ISOL — 3A — PNL 014xD CB34

CABIN VENT — VENT ISOL — OP CL — OPEN — CLOSE — PNL L2 S3 — 5.1K

V61 X2025E OF4 N/A — CABIN VENT ISOL OPEN — 1=OPEN 1 S/S
V61 X2005E OF4 N/A — CABIN VENT ISOL CLOSED — 1=CLOSED 1 S/S

Y_O =67.7 Z_O =378.2

1080 LBM/HR ± 120 LB/HR
16.7 PSID VENTING TO 14.7 PSIA @ 70°F

ITEM 1.87

MN C — ATM PRESS CONTROL — CABIN RELIEF B — 3A — PNL 016xD CB17
V_{MNC} 016

CABIN RELIEF — B — ENA CL — OP CL — ENABLE — CLOSE — PNL L2 S2 — 5.1K

V61 X2136E OF4 N/A — CABIN PRESS RLF VLV B ENABLED — 1=ENABLED 1 S/S
V61 X2135E OF4 N/A — CABIN PRESS RLF VLV B CLOSED — 1=CLOSED 1 S/S

MIN CRACK 15.5 PSID
MIN RESEAT 15.5 PSID
FULL FLOW 16.0 PSID

Y_O =67.7 Z_O =394.4

MAX FLOW 150 LB/HR

ITEM 1.1

MIN CRACK 15.5 PSID
MIN RESEAT 15.5 PSID
FULL FLOW 16.0 PSID

Y_O =74.2 Z_O =394.4

MAX FLOW 150 LB/HR @ 16 PSIA INLET AND 70°F VENTED TO VACUUM
MAX LEAKAGE @ 15 PSID = 15 SCCM

ITEM 1.1

MN B — ATM PRESS CONTROL — CABIN RELIEF A — 3A — PNL 015xD CB23
V_{MNB} 015

CABIN RELIEF — A — ENA CL — OP CL — ENABLE — CLOSE — PNL L2 S1 — 5.1K

V61 X2131E OF4 N/A — CABIN PRESS RLF VLV A ENABLED — 1=ENABLED 1 S/S
V61 X2130E OF4 N/A — CABIN PRESS RLF VLV A CLOSED — 1=CLOSED 1 S/S

ARPCS N_2/O_2 FLOW METER

$Z_{2,7}$ 6.1-2
$Z_{3,6}$ 6.1-2

- FLOW METER OPERATION
- OUTPUT 10mv/LB/HR
- 10mA CONSTANT
- R_1 R_2
- CAPILLARY FLOW
- 1 SCCM/LB/HR SYS FLOW
- S_1 S_2
- .020"
- MAIN FLOW — MAIN FLOW
- SENSING ELEMENTS ARE BOTH 100 F ABOVE AMBIENT AT ZERO FLOW (APPROX 160 F)
- FLOW COOLS THE S_1 ELEMENT - REDUCING RESISTANCE
- HEAT ADDED BY S_1 CAUSES S_2 TEMPERATURE TO RISE - INCREASING RESISTANCE
- S_1 REDUCED RESISTANCE AND S_2 INCREASED RESISTANCE UNBALANCES THE BRIDGE CIRCUIT PRODUCING OUTPUT VOLTAGE PROPORTIONAL TO THE UNBALANCE
- AT FULL SCALE RANGE 5 SCCM (5 LB/HR SYS FLOW), S_1 TO S_2 DELTA T=100F
- HEATING PRODUCED BY S_1 AND S_2 LIMITED TO 50 MV PER FLOW METER
- HIGH SYS FLOWS >50 LB/HR OVERPOWERS THE HEATING CAPABILITY AND DELTA T (S_1 TO S_2) IS REDUCED
- AT 15 TO 20 TIMES FULL SCALE FLOW DELTA T (S_1 TO S_2) APPROACHES ZERO

INNER MOLD LINE — LEFT PLENUM — CREW MODULE

LOCATED BELOW HATCH

DEBRIS SCREEN — 0.20 PSID
DEBRIS SCREEN — 0.20 PSID
CABIN NEGATIVE PRESSURE RELIEF VALVE ITEM 1.86

FITTING ASSY, DISCONNECT, SWIVEL, 90°
.18
45° TYP
.06 TYP
VIBRO-ETCH FLOW DIRECTION

O_2 BLEED ORIFICE
EXTERNAL DETAILS

MN B — ATM PRESS CONTROL — PPO2 C CAB dP/dT — 3A — PNL 015xD CB16
V_{MNB} 015

PPO2 C
6.2

FITTING MATES WITH DISCONNECT
TAPERED EXPANDER PIN
FILTER SCREENS
FLARED UNION-ENDS
ELBOW TUBE, 90° SWIVEL, 37° FLARED
ORIFICE
JET BODY

O_2 BLEED ORIFICE
INTERNAL DETAILS

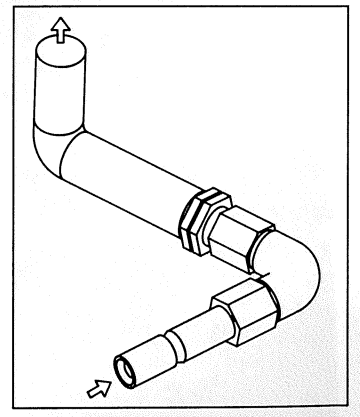

O_2 BLEED ORIFICE
OBLIQUE VIEW

O_2 BLEED ORIFICE SPEC FLOW RATES

CREW SIZE	O_2 SUPPLY PRESSURE PSIA	O_2 MASS FLOW RATE DESIRED	O_2 MASS FLOW RATE PROVIDED
4,5	110.2 ± 10	.24 LB/HR	0.254 +0.052 -0.034 LB/HR
6,7	110.2 ± 10	.36 LB/HR	0.363 +0.064 -0.049 LB/HR

H Z5 1 CABIN PRESSURE
F Z6 6.1-2 2 PPO_2 A
F Z4 6.1-2 3 PPO_2 B
I Z6 20 PPO_2 C
AVG_PPO_2
W Z7 6.1-2 8 SYS 1 N_2 TANK 1 T
W Z7 6.1-2 9 SYS 1 N_2 TANK 2 T
W Z6 6.1-2 18 SYS 1 N_2 TANK 3 T
W Z5 6.1-2 19 SYS 1 N_2 TANK 4 T
V Z7 6.1-2 10 SYS 1 N_2 TANK P
W Z3 6.1-2 11 SYS 2 N_2 TANK 1 T
W Z3 6.1-2 12 SYS 2 N_2 TANK 2 T
W Z2 6.1-2 21 SYS 2 N_2 TANK 3 T
V Z2 6.1-2 22 SYS 2 N_2 TANK 4 T
V Z3 6.1-2 13 SYS 2 N_2 TANK P
O Z4 6.1-2 14 EMER O_2 TANK T
O Z4 6.1-2 15 EMER O_2 TANK P

1 PPO2A_ENA (V92J2131C), PPO2B_ENA (V92J2132) AND PPO2C ENA (J92J2133C) PROVIDE THE CAPABILITY TO INHIBIT PPO2A, PPO2B, AND PPO2C FROM THE GROUND OR THROUGH A COMP CHANGE (SPEC 60). USABLE PPO2 INPUTS ARE DETERMINED BY THE PPO2A_USE, PPO2B_USE, AND PPO2C_USE PARAMETERS. VALUES OF THESE PARAMETERS ARE DETERMINED AS FOLLOWS:

PPO2X_ENA X=A, B, OR C		PPO2X 'M' STATUS X=A, B, OR C		PPO2X_USE X=A, B, OR C
1	+	'M' STATUS OFF	=	1
1		'M' STATUS ON		0
0		'M' STATUS OFF		0
0		'M' STATUS ON		0

IF PPO2 ENABLE = 0 OR CAB P = 0, THEN A 'NOK' (NOT OKAY) MESSAGE IS DISPLAYED FOR O_2 CONCENTRATION (V92X2103X)

12. ITEM NO.'S REFER TO ROCKWELL HARDWARE NO.'S

11 CABIN PRESSURE BLEED VALVES (ITEM 1.87)
THESE VALVES ARE SERIES MOUNTED IN A COMMON HOUSING AND ARE USED TO VENT THE CABIN PRESSURE DOWN FOLLOWING THE PRELAUNCH CABIN LEAK CHECK AT 16.7 PSIA. CLOSING TIME ≤ 2 SEC WITH 16.7 PSIA VENTING TO 14.7 PSIA AT 70° F

10 POSITIVE PRESSURE RELIEF VALVES (ITEM 1.1)
THESE PRESSURE-COMPENSATED POPPET VALVES ARE SPRING LOADED AGAINST CABIN PRESSURE AND RELIEVE OVERBOARD INTO MIDBODY. MOTORIZED BUTTERFLY VALVES IN SERIES ARE PROVIDED TO CLOSE THE LINE IF THE RELIEF VALVE FAILS OPEN

9 FOR OV-102 ONLY, PPO2C WAS ORIGINALLY IN A METERED CIRCUIT AND REQUIRED A SIGNAL CONDITIONER TO AMPLIFY THE SIGNAL. THE OTHER VEHICLES WERE DESIGNED WITHOUT A METERED PPO2C CIRCUIT AND, THEREFORE, DO NOT NEED A SIGNAL CONDITIONER

8 IF A 'DIVIDE BY ZERO' CONDITION OCCURS, THE COMP WILL DISPLAY AN 'NOK' MEANING 'NOT OK'

7 PRELAUNCH: CABIN PRESSURE UL=15.5 PSIA
POST INSERT: CABIN PRESSURE UL=15.2 PSIA

6 O_2 BLEED ORIFICE: INSTALLED IN LEH O_2 5 QD POSTSLEEP FD2
REMOVED POSTSLEEP DEORBIT PREP DAY
REINSTALLED FOR 1 DAY WAVE OFFS

5. REFER TO TABLE 6-I FOR DRAWING REFERENCES

4 BFS OPS 0, OPS 1, OPS 3:
P_0 IS THE CABIN PRESS AT TIME ZERO WHILE P_{30} IS THE CABIN PRESS 30 SEC LATER. THE PRESSURES AND COMP ARE UPDATED EVERY 5 SEC. BFS, SM ALERT OCCURS IF CABIN LEAK RATE IS GREATER THAN -.12 PSIA/MIN

3 KLAXON ANNUNCIATES FOR LOSS OF CABIN PRESSURE ONLY; THEREFORE, THE NEGATIVE SIGN OF dP/dT IS ASSUMED

2 O_2 PARTIAL PRESSURE OPERATION- A DIFFUSION BARRIER, CATALYTIC ELECTRODE, BASIC ELECTROLYTE AND METAL COUNTER ELECTRODE ARE USED TO MEASURE OXYGEN FLOW THROUGH DIFFUSION BARRIER IN DIRECT PROPORTION TO PARTIAL PRESSURE. CHANGE IN ELECTROLYTE CONDUCTIVITY RESULTS IN A 0 TO 5VDC SIGNAL PROPORTIONAL TO OXYGEN

NOTES: 1 CABIN NEGATIVE PRESSURE RELIEF VALVES (ITEM 1.86)
THESE POPPET VALVES PROVIDE RELIEF FROM THE FORWARD FUSELAGE COMPARTMENT DURING ENTRY AFTER A CABIN DEPRESSURIZATION TO 8 PSIA. A REDUNDANT CAP IS PROVIDED TO PREVENT CABIN DECOMPRESSION IF A POPPET VALVE FAILS OPEN. MIN. FLOW 60 LB/MIN AT .5 PSID. ΔP FOR AUTOMATIC CAP RELEASE 0.7 PSID. A PINHOLE IS DRILLED INTO CAP TO MAINTAIN 0.0 ΔP ACROSS CAP

*1 PCS 1

NATIONAL AERONAUTICS AND SPACE ADMINISTRATION LYNDON B. JOHNSON SPACE CENTER HOUSTON, TEXAS		SIGNATURE	DATE
PRESSURE CONTROL SYSTEM		DSGN L.M. BUCHANAN	1/19/83
		DR TOM LENERS	1/19/83
		ENGR P.J. WOODARD	
		ENGR P.J. Woodard	11/19/91
		APP Mark Simmons	11/19/91
DWG NO 6.1	SPACE SHUTTLE	APP	
	ALL	OMNIPLAN S.K. Kimbrell	11-20-91
SHEET 1 OF 2	PAGE 104.5 X 34	LTR E	PCN 1

BASIC REV E-1

DATE: 10/28/91	NAME: VSH	VERSION: BPT.5
DATE: 11/06/91	NAME: VSH	VERSION: BPT.6
DATE: 11/14/91	NAME: MDU	VERSION: INK.9

O_2 REGULATOR ASSEMBLY 1

O_2 REG INLET

SYS 1

MAX FLOW 75 LB/HR

100 ± 10 PSIG

TP4

O_2 REG 1

245 PSIG

215 RESEAT

V61 P2102A OF3 OF3 — SYS 1 O_2 SUPPLY PRESS — 0 TO 1500 PSIA — 1 S/S

PNL M01OW

ITEM 1.7

O_2 REG INLET CLOSED= MAX ALLOWABLE LEAKAGE OF O_2 REG ASSEMBLY=10 SCCM (+2.7 PSI/MIN)

V61 P2105A OF1 OF1 — SYS 1 O_2 FLOW — 0 TO 5 LB/HR — 1 S/S C&W

SM SYS SUMM 1 DISP 066

TO C&W

PAYLOAD O_2

SYS 1

ITEM 1.27

ITEM 1.89

7 LB/HR MAX .4 LB/HR NOMINAL

CHECK VALVE ALLOWABLE SPEC LEAKAGE 0.2 SCCM (0.57 PSI/MIN)

ITEM 1.8

2 PSID AT 75 LB/HR

V61 P2115A OF1 OF1 — O_2 REG 1 PRESS — 0 TO 300 PSIA — 1 S/S F

SM DISP 066

TP18

14.7 PSI CABIN REG INLET

SYS 1

MAX FLOW 75 LB/HR

14.7 ± .2 PSIA

CABIN REG 1

.75 TO 75 LB/HR TP 11 HIGH FLOW

0 TO .75 LB/HR TP 12 LOW FLOW

V61 P2104A OF3 OF3 — CABIN REG 1 INLET PRESS — 0 TO 300 PSIA — 1 S/S

PAYLOAD N_2

SYS 1

ITEM 1.28

ITEM 1.90

10 LB/HR MAX

X_0 = 576

TO PAYLOAD INTERFACE PANEL

MID FUSELAGE

H_2O TK N_2 REG INLET

SYSTEM 1 OPEN

ITEM 1.11

MAX FLOW 75 LB/HR

8 ± .2 PSIA

EMER REG 1

.75 TO 75 LB/HR TP 15 HIGH FLOW

0 TO .75 LB/HR TP 16 LOW FLOW

LEH O_2 SUPPLY 1

LEH O_2 SUPPLY 2

PNL C7

LEH O_2 REG 1

LEH O_2 REG 2

PNL M069M LEH O2 7 & 8

PNL M032M LEH O2 5 & 6

PNL C6 LEH O2 1, 2, 3, & 4

(TYPICAL 1 OF 8)

PNL C5

PNL C4

DIRECT O_2

DIRECT OXYGEN

M069M

EMU 1 OXYGEN

EMU 2 OXYGEN

EMU OXYGEN

POS OXYGEN

PNL AW82B

SCU-1 TP141

SCU-2 TP143

TP140

TP142

EVLSS O_2 SPLY PRESS METER

V64 P2020A OF3 OF3 — EVLSS O_2 SPLY PRESS — 0 TO 1500 PSIA — 1 S/S

H_2 XOVER

PNL M01OW

ITEM 1.83

PPO_2 CNTLR

SYS 1

NORM

EMER

PNL M01OW

MN A

ATM CONTROL

O_2/N_2 CNTLR 1

3A

PNL 014+D CB19

V_{MNA} 014

10K

TO PASS SM COMPUTER

SM SYS SUMM 1 DISP 066

V61 P2511A OF1 OF1 — PPO_2 A — 0 TO 5 PSIA — 1 S/S C&W

PPO_2 SENSOR A

AMP

O_2/N_2 CONTROLLER 1

POWER SUPPLY

DET

DR

2.2 PSIA

3.2 PSIA

V61 S2140E OF1 N/A — SYS 1 PPO_2 MODE SEL — 1=NORM 1 S/S

V61 S2370E OF1 N/A — SEL SYS 1 N_2 FLOW ON — 1=ON 1 S/S

DSC OF 1

+5VDC

V61 X2372E OF1 OF1 — SYS 1 O_2/N_2 CNTLR VLV — 1=OPEN 1 S/S C

SM DISP 066

ATM PRESS CONTROL

O_2/N_2 CNTLR VLV

SYS 1

5.1K

V61 S2371E OF1 N/A — SEL SYS 1 N_2 FLOW AUTO — 1=AUTO 1 S/S

PNL L2 S16

PNL L2 S19

V61 S2375E OF2 N/A — SEL SYS 2 N_2 FLOW ON — 1=ON 1 S/S

V61 S2376E OF4 N/A — SEL SYS 2 N_2 FLOW AUTO — 1=AUTO 1 S/S

V61 X2377E OF2 OF2 — SYS 2 O_2/N_2 CNTLR VLV — 1=OPEN 1 S/S C

SM DISP 066

MN B

ATM PRESS CONTROL

O_2/N_2 CNTLR 2

3A

PNL 015+D CB18

V_{MNB} 015

PPO_2 SENSOR B

O_2/N_2 CONTROLLER 2

V61 P2513A OF2 OF2 — PPO_2 B — 0 TO 5 PSIA — 1 S/S C&W

V61 S2350E OF1 N/A — PPO_2 SNSR/VLV NORMAL — 1=NORM 1 S/S

PPO_2 SNSR/VLV

NORM

REVERSE

PNL L2 S17

14.7 PSI CABIN REG INLET

SYS 2

MAX FLOW 75 LB/HR

ITEM 1.2

14.7 ± .2 PSIA

CABIN REG 2

.75 TO 75 LB/HR TP 10 HIGH FLOW

0 TO .75 LB/HR TP 9 LOW FLOW

V61 P2204A OF2 OF2 — CABIN REG 2 INLET PRESS — 0 TO 300 PSIA — 1 S/S

PAYLOAD N_2

SYS 2

ITEM 1.28

ITEM 1.90

10 LB/HR MAX

H_2O TK N_2 REG INLET

SYSTEM 2 OPEN

PAYLOAD O_2

SYS 2

ITEM 1.27

ITEM 1.89

7 LB/HR MAX .4 LB/HR NOMINAL

X_0=576 MID FUSELAGE

TO PAYLOAD INTERFACE PANEL

V61 P2215A OF2 OF2 — O_2 REG 2 PRESS — 0 TO 300 PSIA — 1 S/S F

SM DISP 066

ITEM 1.8

TP17

2 PSID AT 75 LB/HR

CHECK VALVE ALLOWABLE SPEC LEAKAGE 0.2 SCCM (0.57 PSI/MIN)

ITEM 1.82

MAX FLOW 75 LB/HR

8 ± .2 PSIA

EMER REG 2

.75 TO 75 LB/HR TP 14 HIGH FLOW

0 TO .75 LB/HR TP 13 LOW FLOW

O_2 REGULATOR ASSEMBLY 2

O_2 REG INLET

SYS 2

MAX FLOW 75 LB/HR

100 ± 10 PSIG

TP3

O_2 REG 2

245 PSIG

215 RESEAT

V61 P2202A OF2 OF2 — SYS 2 O_2 SUPPLY PRESS — 0 TO 1500 PSIA — 1 S/S

ITEM 1.7

O_2 REG INLET CLOSED= MAX ALLOWABLE LEAKAGE OF O_2 REG ASSEMBLY=10 SCCM (+2.7 PSI/MIN)

V61 P2205A OF2 OF2 — SYS 2 O_2 FLOW — 0 TO 5 LB/HR — 1 S/S C&W

SM SYS SUMM 1 DISP 066

TO C&W

ITEM 1.13

3.2 PSIA

2.2 PSIA

V61 P2513A OF2 OF2 — PPO_2 B — 0 TO 5 PSIA — 1 S/S C&W

V61 S2140E OF2 N/A — SYS 2 PPO_2 MODE SEL — 1=NORM 1 S/S

TO PASS SM COMPUTER

SM SYS SUMM 1 DISP 066

PPO_2 CNTLR

SYS 2

NORM

EMER

PNL M01OW

10K

H_2O TK N_2 REG INLET

SYSTEM 2 OPEN

PAYLOAD O_2

SYS 2 OPEN

ITEM 1.27

ITEM 1.89

7 LB/HR MAX .4 LB/HR NOMINAL

TP5

X_0=576 MID FUSELAGE

TO PAYLOAD INTERFACE PANEL

V61 P2215A OF2 OF2 — O_2 REG 2 PRESS — 0 TO 300 PSIA — 1 S/S F

SM DISP 066

ITEM 1.8

TP17

2 PSID AT 75 LB/HR

CHECK VALVE ALLOWABLE SPEC LEAKAGE 0.2 SCCM (0.57 PSI/MIN)

ITEM 1.82

MAX FLOW 75 LB/HR

8 ± .2 PSIA

EMER REG 2

.75 TO 75 LB/HR TP 14 HIGH FLOW

0 TO .75 LB/HR TP 13 LOW FLOW

V61 S2350E OF1 N/A — PPO_2 SNSR/VLV NORMAL — 1=NORM 1 S/S

PPO_2 SNSR/VLV

NORM

REVERSE

PNL L2 S17

DSC OF 2

+5VDC

14.7 PSI CABIN REG INLET

SYS 2

MAX FLOW 75 LB/HR

ITEM 1.2

14.7 ± .2 PSIA

CABIN REG 2

.75 TO 75 LB/HR TP 10 HIGH FLOW

0 TO .75 LB/HR TP 9 LOW FLOW

V61 P2204A OF2 OF2 — CABIN REG 2 INLET PRESS — 0 TO 300 PSIA — 1 S/S

SM DISP 066

ATM PRESS CONTROL

O_2/N_2 CNTLR VLV

SYS 2

5.1K

V61 S2375E OF2 N/A — SEL SYS 2 N_2 FLOW ON — 1=ON 1 S/S

V61 S2376E OF4 N/A — SEL SYS 2 N_2 FLOW AUTO — 1=AUTO 1 S/S

V61 X2377E OF2 OF2 — SYS 2 O_2/N_2 CNTLR VLV — 1=OPEN 1 S/S C

SM DISP 066

PNL L2 S16

PNL L2 S19

NOTES:

1. ASCENT/ENTRY: SYS 1, 2-OP ORBIT: SYS 1(2)-OP(CL)

2. RESERVED

3. VOLUME OF EACH TANK IS 8181 IN^3, BURST P 4950 PSIG

4. O_2/N_2 CNTLR HAS TWO CONTROL POINTS:
   1. NORM - 3.2 ± .25; CONTROLLER PROVIDES OUTPUT SIGNAL WHEN PPO_2 REACHES 3.45 PSIA AND RETURNS TO ZERO WHEN PPO_2 REACHES 2.95 PSIA
   2. EMER - 2.2 ± .25; CONTROLLER PROVIDES OUTPUT SIGNAL WHEN PPO_2 REACHES 2.45 PSIA AND RETURNS TO ZERO WHEN PPO_2 REACHES 1.95 PSIA (SWITCH POSITION NOT USED)

5. $O_2(N_2)$ CONNECTIONS MANIFOLDED SEPARATELY AND ROUTED TO PAYLOAD INTERFACE PANEL

6. ASCENT/ENTRY: SYS 1, 2-OP ORBIT: SYS 1(2)-OP(CL)

7. ITEM NUMBERS REFER TO ROCKWELL HARDWARE NUMBERS

8. LOSS OF EITHER CONTROL BUS PRECIPITATES LOSS OF THE SWITCH FUNCTION

9. IF O2/N2 CNTLR 1 OR O2/N2 CNTLR 2 POWER IS LOST THE AUTO AND CLOSE FUNCTIONS CAN BE REGAINED BY SWITCHING THE PPO2 SNSR/VLV TO REVERSE

10. O_2 PARTIAL PRESSURE OPERATION- A DIFFUSION BARRIER, CATALYTIC ELECTRODE, BASIC ELECTROLYTE AND METAL COUNTER ELECTRODE ARE USED TO MEASURE OXYGEN FLOW THROUGH DIFFUSION BARRIER IN DIRECT PROPORTION TO PARTIAL PRESSURE. CHANGE IN ELECTROLYTE CONDUCTIVITY RESULTS IN A 0 TO 5VDC SIGNAL PROPORTIONAL TO OXYGEN PARTIAL PRESSURE

11. RATED 10 LB/HR AT 300 PSI UPSTREAM PRESSURE

12. WATER PRESSURIZATION SYSTEM NITROGEN IS CHANNELED TO 14.7 REGULATOR TO PROVIDE A DESIRED BACKPRESSURE FUNCTION. WHEN THE REGULATOR IS CLOSED, 16 PSIG NITROGEN IMMOBILIZES INTERNAL VALVE ELEMENTS TO MINIMIZE LIFE CYCLE COMPONENT WEAR INDUCED BY RANDOM ASCENT VIBRATION

13. REFER TO TABLE 6-I FOR DRAWING REFERENCES

14. MANUAL VALVES USED TO BLEED DOWN LINE PRESSURE AT FSS FOR REMOVAL/SERVICE. (GROUND OPS ONLY)

15. ASCENT/ENTRY: SYS 1, 2-CL ORBIT: SYS 1(2)- OP(CL)

16. ASCENT/ENTRY: SYS 1(2)- OP(CL) ORBIT: SYS 1(2)- AUTO(CL)

17. CABIN GAS AT PPO2=3.08 PSI, P_T=14.7 PSI, VOL=2325 FT^3; O_2=36.2 LBM, N_2=136.6 LBM, AIR=172.8 LBM
    CABIN + AIRLOCK GAS AT PPO2=3.08 PSI, P_T=14.7 PSI, VOL=2475 FT^3; O_2=38.6 LBM, N_2=146.0 LBM, AIR=184.6 LBM

18. PPO_2 SENSOR LIFE 12,000 HRS AMPLIFIER OUTPUT ADJUSTABLE (GROUND OPS ONLY)

19. O_2/N_2 CNTLR HAS TWO CONTROL POINTS:
    1. NORM - 3.2 ± .25; CONTROLLER PROVIDES OUTPUT SIGNAL WHEN PPO_2 REACHES 3.45 PSIA AND RETURNS TO ZERO WHEN PPO_2 REACHES 2.95 PSIA
    2. EMER - 2.2 ± .25; CONTROLLER PROVIDES OUTPUT SIGNAL WHEN PPO_2 REACHES 2.45 PSIA AND RETURNS TO ZERO WHEN PPO_2 REACHES 1.95 PSIA (SWITCH POSITION NOT USED)

20. $O_2(N_2)$ CONNECTIONS MANIFOLDED SEPARATELY AND ROUTED TO PAYLOAD INTERFACE PANEL

21. VOLUME OF EACH TANK IS 8181 IN^3, BURST P 4950 PSIG

22. RESERVED

NOTES: 1. ASCENT/ENTRY: SYS 1, 2-OP ORBIT: SYS 1(2)-OP(CL)

*1 PCS 2

SIGNATURE		DATE	NATIONAL AERONAUTICS AND SPACE ADMINISTRATION LYNDON B. JOHNSON SPACE CENTER HOUSTON, TEXAS	
DSGN	LAURIE BUCHANAN	1/19/84		
DR	TOM LENERS	1/19/84		
ENGR	P. J. WOODARD		PRESSURE CONTROL SYSTEM	
ENGR		11/14/91		
APP		11/14/91		
APP			SPACE SHUTTLE	DWG NO 6.1
OMNIPLAN	S.K. Eubanks	11-20-91	ALL	
LTR	E	PCN 1	126.5 X 34	PAGE SHEET 2 OF 2

BASIC REV E-1

S R Q P O N M L K J

MID FUSELAGE | CREW MODULE

X_O = 576

V_{MNA} MPG1

V45 X10806 OF4 N/A — SYS 1 GRYO O_2 ECS SUPPLY VLV — 1=OPEN 1 S/S

OPEN B GSE OPEN A

10A 10A

ITEM 1.5 10µ

FREON LOOP 1 HZ 7.1

23.9 ±1 LBS/HR MAX O_2 FLOW

MN A ATM PRESS CONTROL N_2 REG INLET 1 — V_{MNA} 014 — 3A — PNL 014-D GB21

ATM PRESS CONTROL N_2 SYS 1 REG INLET — OP CL — OPEN ▼ CLOSE ▲ — PNL L2 S14 — 5.1K

V61 X2321E OF4 N/A — N_2 REG 1 INLET VLV OPEN — 1=OPEN 1 S/S

V61 X2415E OF4 N/A — N_2 REG 1 INLET VLV CL — 1=CLOSED 1 S/S

N_2 REG INLET CLOSED= MAX ALLOWABLE LEAKAGE OF N_2 REG ASSEMBLY IS 15 SCRM (+0.31 PSI/MIN)

N_2 PRESS REG AND RLF VALVE ASSEMBLY 1 — 400 ±50 PSIG — 200 ±15 PSIG — 295 PSIG RESEAT — N_2 REG 1 — TP32 — TP34 — ITEM 1.25 MAX FLOW 75 LB/HR

ITEM 1.24

V61 P2310A OF3 OF3 — N_2 REG 1 PRESS — 0 TO 300 PSIA — 1 S/S — SM DISP 066

ITEM 1.9 10µ 2 PSID AT 75 LB/HR

V61 R2503A OF1 OF1 — SYS 1 N_2 FLOW — 0 TO 5 LB/HR — 1 S/S CSM — SM SYS SUMM 1 DISP 066

TO C&W 6.1-1

V61 S2102E OF1 N/A — O_2 XOVR SYS 1 OPEN — 1=OPEN 1 S/S

MN A ATM PRESS CONTROL O_2 XOVR 1 — V_{MNA} 014 — 3A — PNL 014-D GB20

ATM PRESS CONTROL O_2 XOVR SYS 1 — OPEN — CLOSE — PNL L2 S15 — 5.1K

NC ITEM 1.19

V61 P2166A OF3 OF3 — EMER O_2 REG PRESS — 0 TO 1500 PSIA — 1 S/S

O_2 EMER OPEN — CLOSE — PNL M010M

LEH O_2 SUPPLY 1 — OPEN — CLOSE — PNL C7 — MAX FLOW 75 LB/HR — 100 ±10 PSIG TP1 — LEH O_2 REG 1 — 245 PSIG — 215 RESEAT — 10µ

LEH O_2 SUPPLY 2 — OPEN — CLOSE — PNL C7 — MAX FLOW 75 LB/HR — 100 ±10 PSIG TP2 — LEH O_2 REG 2 — 245 PSIG — 215 RESEAT — 10µ

SM SYS SUMM 1 DISP 066

EVLSS O_2 SPLY PRESS METER — V64 P0202A OF3 OF3 — EVLSS O_2 SPLY PRESS — 0 TO 1500 PSIA — 1 S/S — HZ 6.3

EMU 1 OXYGEN — OPEN — CLOSE — PNL AW82B — EMU 1 OXYGEN — POS OXYGEN — SCU-1 TP141 — HZ 6.3 TP140

EMU 2 OXYGEN — OPEN — CLOSE — PNL AW82B — EMU 2 OXYGEN — POS OXYGEN — SCU-2 TP143 — HZ 6.3 TP142

MN C ATM PRESS CONTROL O_2 EMER — V_{MNC} 016 — 3A — PNL 016-D GB16

ATM PRESS CONTROL O_2 EMER — OP CL — OPEN ▼ CLOSE ▲ — PNL L2 S12 — 5.1K

V61 X2163E OF4 N/A — EMER O_2 SPLY VLV OPEN — 1=OPEN 1 S/S

V61 X2165E OF4 N/A — EMER O_2 SPLY VLV CLOSED — 1=CLOSED 1 S/S

MAX FLOW 150 LB/HR — 300 ± 15 PSIG — EMER O_2 REG — TP36 TP37 — NC

V61 P2161A OF2 OH2 — EMER O_2 TANK PRESS — 0 TO 3500 PSIA — 1 S/S

EMER O_2 — TO PASS SM COMPUTER 14 — FZ 1 6.1-1

V61 Y2216A OF3 OH2 — EMER O_2 TANK TEMP — -75 TO +175° F — 1 S/S — MISSION KIT

TO SM COMPUTER 15 — FZ 1 6.1-1

10µ GSE

EMER O_2 SUPPLY HLF ASSEMBLY ITEM 1.126 — 1250 PSIG 1075 RESEAT

MN B ATM PRESS CONTROL O_2 XOVR 2 — V_{MNB} 015 — 3A — PNL 015-D GB18

ATM PRESS CONTROL O_2 XOVR SYS 2 — OPEN — CLOSE — PNL L2 S18 — 6.1K

V61 S2200E OF3 N/A — O_2 XOVR SYS 2 OPEN — 1=OPEN 1 S/S

ITEM 1.19 NC

V61 P2410A OF2 OF2 — N_2 REG 2 PRESS — 0 TO 300 PSIA — 1 S/S — SM DISP 066

ITEM 1.9 10µ 2 PSID AT 75 LB/HR

TO C&W 7 — V61 R2554A OF2 OF2 — SYS 2 N_2 FLOW — 0 TO 5 LB/HR — 1 S/S C&W — SM SYS SUMM 1 DISP 066

V61 R2554A OF2 OF2 — SYS 2 O_2 FLOW — 0 TO 5 LB/HR — 1 S/S C&W — SM SYS SUMM 1 DISP 066 — TO C&W 6 HZ 6.1-1

TP1 ITEM 1.6 10µ 2 PSID AT 75 LB/HR

X_O = 576

MID FUSELAGE | CREW MODULE

V_{MNB} MPC2

V45 X10838E OF4 N/A — SYS 2 GRYO O_2 ECS SUPPLY VLV — 1=OPEN 1 S/S

FREON LOOP 2

12.5 ±.5 LBS/HR MAX O_2 FLOW

OPEN B GSE OPEN A

10A 10A

ITEM 1.5 10µ

FREON LOOP 2 HZ 7.1

MN B ATM PRESS CONTROL N_2 REG INLET 2 — V_{MNB} 015 — 3A — PNL 015-D GB20

ATM PRESS CONTROL N_2 SYS 2 REG INLET — OP CL — OPEN ▼ CLOSE ▲ — PNL L2 S22 — 5.1K

V61 X2420E OF4 N/A — N_2 REG 2 INLET VLV CL — 1=CLOSED 1 S/S

V61 X2378E OF4 N/A — N_2 REG 2 INLET VLV OPEN — 1=OPEN 1 S/S

N_2 REG INLET CLOSED= MAX ALLOWABLE LEAKAGE OF N_2 REG ASSEMBLY IS 15 SCCM (+0.21 PSI/MIN)

N_2 PRESS REG AND RLF VALVE ASSEMBLY 2 — 400 ±50 PSIG — 200 ±15 PSIG — 295 PSIG RESEAT 245 RESEAT — N_2 REG 2 — TP33 — TP35 — ITEM 1.25 MAX FLOW 75 LB/HR

ITEM 1.24

V61 P2410A OF2 OF2 — N_2 REG 2 PRESS — 0 TO 300 PSIA — 1 S/S — SM DISP 066

ITEM 1.9 10µ 2 PSID AT 75 LB/HR

TO C&W 7 — V61 R2554A OF2 OF2 — SYS 2 N_2 FLOW — 0 TO 5 LB/HR — 1 S/S C&W — SM SYS SUMM 1 DISP 066

V61 R2554A OF2 OF2 — SYS 2 O_2 FLOW — 0 TO 5 LB/HR — 1 S/S C&W — SM SYS SUMM 1 DISP 066 — TO C&W 6 HZ 6.1-1

TP1 ITEM 1.6 10µ 2 PSID AT 75 LB/HR

X_O = 576

MID FUSELAGE | CREW MODULE

V_{MNA} MPG1

V45 X10806 OF4 N/A — SYS 1 GRYO O_2 ECS SUPPLY VLV — 1=OPEN 1 S/S

OPEN B GSE OPEN A

10A 10A

ITEM 1.5 10µ

FREON LOOP 1 HZ 7.1

MN A ATM PRESS CONTROL N_2 REG INLET 1 — V_{MNA} 014 — 3A — PNL 014-D GB21

ATM PRESS CONTROL N_2 SYS 1 REG INLET — OP CL — OPEN ▼ CLOSE ▲ — PNL L2 S14 — 5.1K

V61 X2321E OF4 N/A — N_2 REG 1 INLET VLV OPEN — 1=OPEN 1 S/S

V61 X2415E OF4 N/A — N_2 REG 1 INLET VLV CL — 1=CLOSED 1 S/S

N_2 REG INLET CLOSED= MAX ALLOWABLE LEAKAGE OF N_2 REG ASSEMBLY IS 15 SCRM (+0.31 PSI/MIN)

N_2 PRESS REG AND RLF VALVE ASSEMBLY 1 — 400 ±50 PSIG — 200 ±15 PSIG — 295 PSIG RESEAT — N_2 REG 1 — TP32 — TP34 — ITEM 1.25 MAX FLOW 75 LB/HR

ITEM 1.24

V61 P2310A OF3 OF3 — N_2 REG 1 PRESS — 0 TO 300 PSIA — 1 S/S — SM DISP 066

ITEM 1.9 10µ 2 PSID AT 75 LB/HR

V61 R2503A OF1 OF1 — SYS 1 N_2 FLOW — 0 TO 5 LB/HR — 1 S/S CSM — SM SYS SUMM 1 DISP 066

TO C&W 6.1-1

V61 S2102E OF1 N/A — O_2 XOVR SYS 1 OPEN — 1=OPEN 1 S/S

MN A ATM PRESS CONTROL O_2 XOVR 1 — V_{MNA} 014 — 3A — PNL 014-D GB20

ATM PRESS CONTROL O_2 XOVR SYS 1 — OPEN — CLOSE — PNL L2 S15 — 5.1K

NC ITEM 1.19

V61 P2166A OF3 OF3 — EMER O_2 REG PRESS — 0 TO 1500 PSIA — 1 S/S

O_2 EMER OPEN — CLOSE — PNL M010M

LEH O_2 SUPPLY 1 — OPEN — CLOSE — PNL C7 — MAX FLOW 75 LB/HR — 100 ±10 PSIG TP1 — LEH O_2 REG 1 — 245 PSIG — 215 RESEAT — 10µ

LEH O_2 SUPPLY 2 — OPEN — CLOSE — PNL C7 — MAX FLOW 75 LB/HR — 100 ±10 PSIG TP2 — LEH O_2 REG 2 — 245 PSIG — 215 RESEAT — 10µ

SM SYS SUMM 1 DISP 066

EVLSS O_2 SPLY PRESS METER — V64 P0202A OF3 OF3 — EVLSS O_2 SPLY PRESS — 0 TO 1500 PSIA — 1 S/S — HZ 6.3

EMU 1 OXYGEN — OPEN — CLOSE — PNL AW82B — EMU 1 OXYGEN — POS OXYGEN — SCU-1 TP141 — HZ 6.3 TP140

EMU 2 OXYGEN — OPEN — CLOSE — PNL AW82B — EMU 2 OXYGEN — POS OXYGEN — SCU-2 TP143 — HZ 6.3 TP142

MN C ATM PRESS CONTROL O_2 EMER — V_{MNC} 016 — 3A — PNL 016-D GB16

ATM PRESS CONTROL O_2 EMER — OP CL — OPEN ▼ CLOSE ▲ — PNL L2 S12 — 5.1K

V61 X2163E OF4 N/A — EMER O_2 SPLY VLV OPEN — 1=OPEN 1 S/S

V61 X2165E OF4 N/A — EMER O_2 SPLY VLV CLOSED — 1=CLOSED 1 S/S

MAX FLOW 150 LB/HR — 300 ± 15 PSIG — EMER O_2 REG — TP36 TP37 — NC

V61 P2161A OF2 OH2 — EMER O_2 TANK PRESS — 0 TO 3500 PSIA — 1 S/S

EMER O_2 — TO PASS SM COMPUTER 14 — FZ 1 6.1-1

V61 Y2216A OF3 OH2 — EMER O_2 TANK TEMP — -75 TO +175° F — 1 S/S — MISSION KIT

TO SM COMPUTER 15 — FZ 1 6.1-1

10µ GSE

EMER O_2 SUPPLY HLF ASSEMBLY ITEM 1.126 — 1250 PSIG 1075 RESEAT

MN B ATM PRESS CONTROL O_2 XOVR 2 — V_{MNB} 015 — 3A — PNL 015-D GB18

ATM PRESS CONTROL O_2 XOVR SYS 2 — OPEN — CLOSE — PNL L2 S18 — 6.1K

V61 S2200E OF3 N/A — O_2 XOVR SYS 2 OPEN — 1=OPEN 1 S/S

ITEM 1.19 NC

V61 P2410A OF2 OF2 — N_2 REG 2 PRESS — 0 TO 300 PSIA — 1 S/S — SM DISP 066

ITEM 1.9 10µ 2 PSID AT 75 LB/HR

TO C&W 7 — V61 R2554A OF2 OF2 — SYS 2 N_2 FLOW — 0 TO 5 LB/HR — 1 S/S C&W — SM SYS SUMM 1 DISP 066

V61 R2554A OF2 OF2 — SYS 2 O_2 FLOW — 0 TO 5 LB/HR — 1 S/S C&W — SM SYS SUMM 1 DISP 066 — TO C&W 6 HZ 6.1-1

TP1 ITEM 1.6 10µ 2 PSID AT 75 LB/HR

X_O = 576

MID FUSELAGE | CREW MODULE

V_{MNB} MPC2

V45 X10838E OF4 N/A — SYS 2 GRYO O_2 ECS SUPPLY VLV — 1=OPEN 1 S/S

FREON LOOP 2

12.5 ±.5 LBS/HR MAX O_2 FLOW

OPEN B GSE OPEN A

10A 10A

ITEM 1.5 10µ

FREON LOOP 2 HZ 7.1

MN B ATM PRESS CONTROL N_2 REG INLET 2 — V_{MNB} 015 — 3A — PNL 015-D GB20

ATM PRESS CONTROL N_2 SYS 2 REG INLET — OP CL — OPEN ▼ CLOSE ▲ — PNL L2 S22 — 5.1K

V61 X2420E OF4 N/A — N_2 REG 2 INLET VLV CL — 1=CLOSED 1 S/S

V61 X2378E OF4 N/A — N_2 REG 2 INLET VLV OPEN — 1=OPEN 1 S/S

N_2 REG INLET CLOSED= MAX ALLOWABLE LEAKAGE OF N_2 REG ASSEMBLY IS 15 SCCM (+0.21 PSI/MIN)

N_2 PRESS REG AND RLF VALVE ASSEMBLY 2 — 400 ±50 PSIG — 200 ±15 PSIG — 295 PSIG RESEAT 245 RESEAT — N_2 REG 2 — TP33 — TP35 — ITEM 1.25 MAX FLOW 75 LB/HR

ITEM 1.24

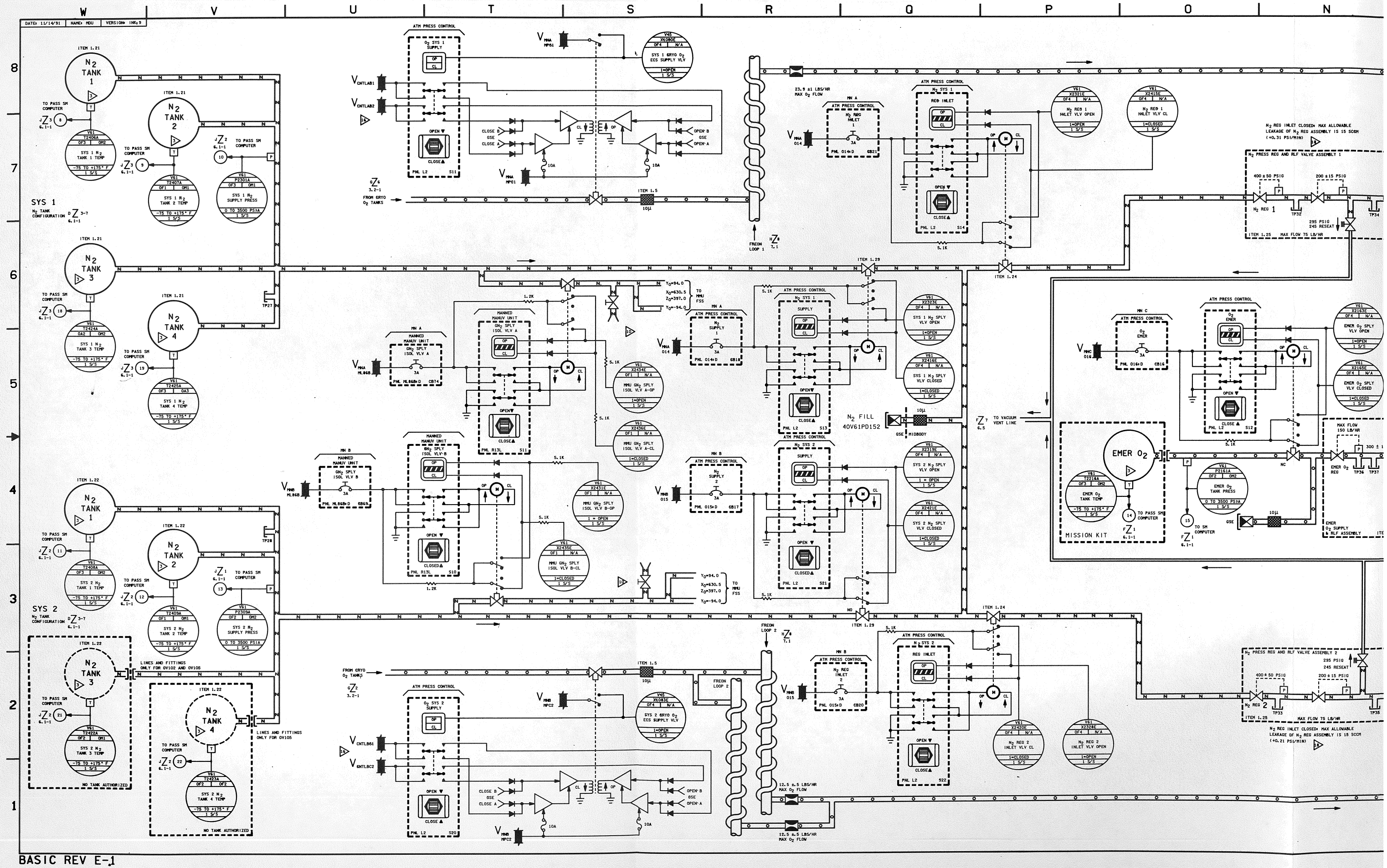

DATE: 11/14/91
NAME: MDU
VERSION: INK 9
SYS 1
SYS 2
N2 TANK 1
N2 TANK 2
N2 TANK 3
N2 TANK 4
ATM PRESS CONTROL
FROM GRYO O2 TANKS
FREON LOOP 1
FREON LOOP 2
N2 FILL 40V61PD152
TO VACUUM VENT LINE
EMER O2
MISSION KIT
N2 REG INLET CLOSED: MAX ALLOWABLE LEAKAGE OF N2 REG ASSEMBLY IS 15 SCCM (+0.31 PSI/MIN)
N2 REG INLET CLOSED: MAX ALLOWABLE LEAKAGE OF N2 REG ASSEMBLY IS 15 SCCM (+0.21 PSI/MIN)
LINES AND FITTINGS ONLY FOR OV102 AND OV105
LINES AND FITTINGS ONLY FOR OV105
NO TANK AUTHORIZED

BASIC REV E-1

BASIC REV E

*2 ARS AIR

DSGN JUDITH B. HEILIG	6/25/79	ATMOSPHERE CIRCULATION	
ENGR N. PAPALIA			
APP			
DWN/PLAN		SPACE SHUTTLE	DWG NO 6.2
LTR E	PCN	SIZE 12&.5 X 34	SHEET 1 OF 1

NATIONAL AERONAUTICS AND SPACE ADMINISTRATION
LYNDON B. JOHNSON SPACE CENTER HOUSTON, TEXAS

NOTES:
1. REPRESENTATION OF TRIAC CONTROLLED SOLID STATE RELAYS
2. ONLY ONE MOTOR AT A TIME CAN BE MECHANICALLY CONNECTED TO THE VALVE. TO USE THE ALTERNATE MOTOR TO DRIVE THE VALVE REQUIRES A MANUAL SWITCHOVER OF LINKAGE
3. ONLY ONE SEPARATOR REQUIRED AT A TIME. 37 LBS/HR OF AIR REQUIRED INTO ECLSS BAY. DOCUMENTATION SPOT180, SYSH 6410
4. MIN SPEED INDICATION 5430 RPM. SPOT180 SYHS 7231 SYHS 6416
5. MIN FAN SPEED RANGE FOR NOMINAL SPEED INDICATION 10,000 TO 2,240 TO 12,720 3,100 RPM. NOMINAL SPEED 11,300 RPM DOCUMENTATION SCHEM. OUTLET FLOW ADJUSTED BY ORIFICE TO LIMIT AT ACROSS LBU TO (35° F
6. INLET TO PEDMM ARSOMO LBU CONTAINS 2500µL FLOW RATES ARE BASED ON SEH-ECS-86-0017
7. APPROXIMATELY 70 PERCENT OF TOTAL FLOW IS BYPASSED WHILE IN FULL HEAT POSITION. MAX TRAVEL TIME OF ACTUATOR FROM FULL HEAT TO FULL COOL IN AUTO CONTROL MODE IS 20 MINUTES.

MANUAL VLV POSITION	HX FLOW (LBS/HR)	BYPASS FLOWS (LBS/HR)
FULL HEAT	526	966
1/3 COOL	666	814
2/3 COOL	1000	470
FULL COOL	1445	15 (MAX)

8. THE ADJUSTMENT OF THE AIR IS A GROUND OPERATION. THE AIR FLOW IS SPLIT BETWEEN THE PAYLOAD AND THE MISSION STATION AS NEEDED. THE TOTAL FLOW BETWEEN THE TWO STATIONS IS 406 LB/HR
9. THE CHECK CRACKS AT 6.0 PSID. FULL FLOW AT 9.5 PSID. DOCUMENTATION SPOT190, SYHS 6458
10. CHECK VALVE OPENS AT A DELTA PRESSURE OF NO MORE THAN 2.0 IN H_2O. DOCUMENTATION SPOT180 SYHS 6431
11. CHECK VALVE OPENS AT A DELTA PRESSURE OF NO MORE THAN 1.0 IN H_2O DOCUMENTATION SPOT180, SYHS 6625 SYHS 6405
12. 50 X 250 MESH .0055 X .0045 INCH DIAMETER WIRE, 40% NOMINAL/70% ABSOLUTE
13. DEBRIS SCREENS ARE LOCATED AT THE LBU INLET PORTS.
14. AMBIENT TEMPERATURE CATALYTIC OXIDIZER FOR CARBON MONOXIDE REMOVAL. MAXIMUM CO REMOVAL RATES 0.66 GM/DAY
15. VACUUM CLEANER, CABIN FAN FILTER TOOL, HW FAN FILTER TOOL IN MPSTK
16. DUCT FLOW RATES (MINIMUM UNLESS OTHERWISE NOTED) ARE BASED ON SEH-ECS-86-0017. SOOB DATA ARE INDICATED IN PARENTHESES AND ARE TYPICAL NOMINAL MIN/MAX FLOW RATES WITH/ WITHOUT MSS AND PSS FLOW. RESPECTIVELY
17. ALTERNATELY REPLACE CANISTERS AFTER USE

CREW SIZE	CANISTERS USED IN MODE (30 CANISTERS MAX) OF-HRS (MAN-HRS)	ADDITIONAL CANISTERS MAY BE STOWED IN MIDDECK LOCKER. POSITION A PAO, POSITION B AFT
2	48 (96)	
4	24 (96)	
7	11 (77)	
10	6.4 (64)	

18. REFER TO TABLE 6-I FOR DRAWING REFERENCE
19. FLEX DUCT IS INSIDE CREW COMPARTMENT DURING ASCENT AND ENTRY, WHILE ON ORBIT THE FLEX DUCT IS PUT INSIDE THE AIRLOCK
20. DOCUMENTATION SEH-ECS-86-1017
21. ALL FORCED AIR COOLED EQUIPMENT HAS 175 OWN FILTER AT 175 INLET
22. ALL ELECTRICAL EQUIPMENT POWER AND USAGE ARE QUOTED FROM 1.2-TM-08S0050-02A, AND 1.3-TM-08S0050-02J, AND 1.2-TM-08S0050-024
23. ONLY DV102 AND DV105 HAVE THE DUCT WORK FOR THE REGENERABLE CO_2 REMOVAL SYSTEM
24. ALL ARS PARMS EXCEPT CAB HX AIR OT ARE ±3% ACCURACY

DATE 09/05/90	NAME MDU	VERSION BPT1.7
DATE 10/01/90	NAME MDU	VERSION BPT1.8
DATE 10/06/90	NAME CAM	VERSION INC.2

FLIGHT DECK
MID DECK
ECLSS BAY
MIDDECK

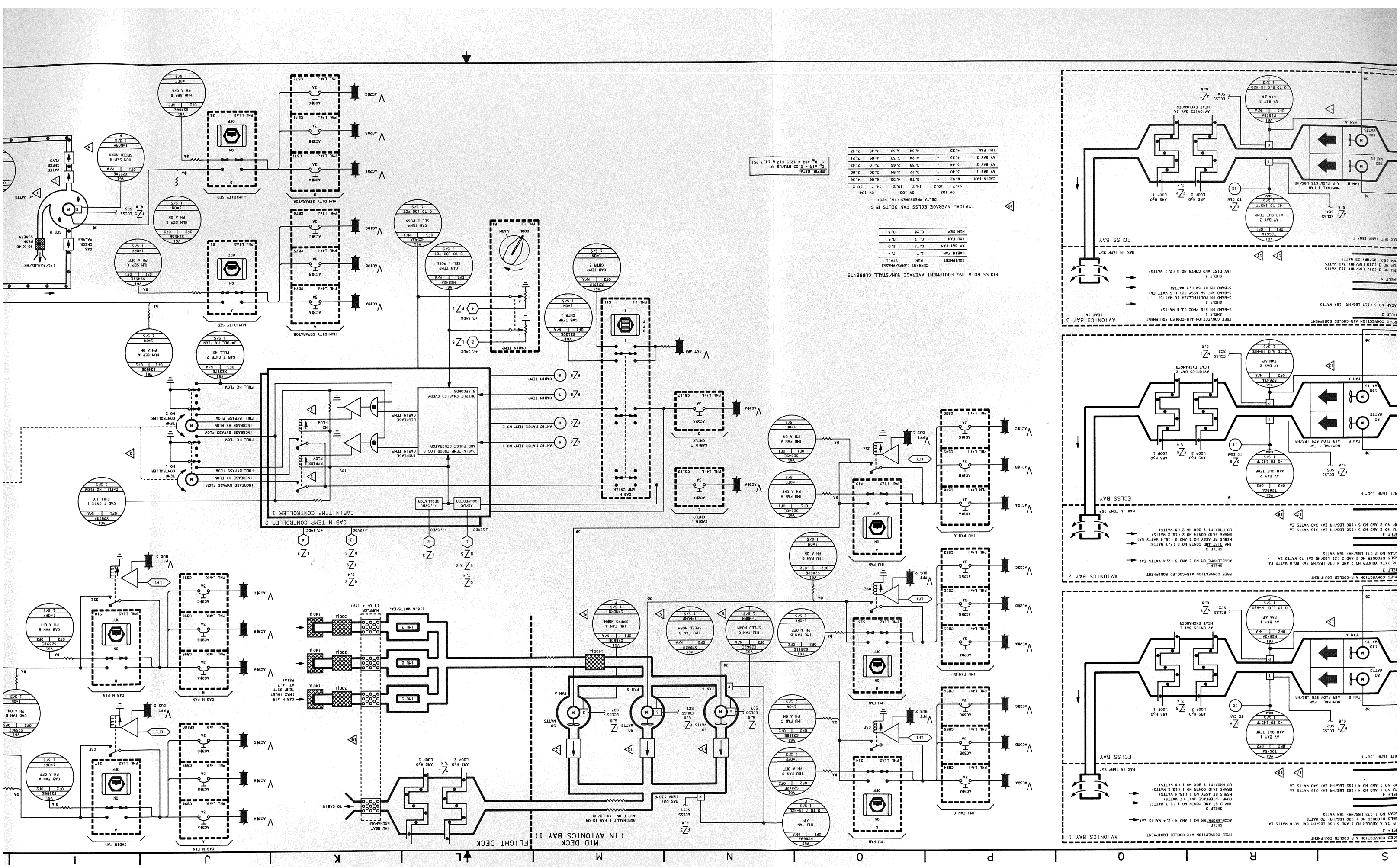
FLIGHT DECK
MID DECK
(IN AVIONICS BAY 1)
AVIONICS BAY 1
AVIONICS BAY 2
AVIONICS BAY 3
ECLSS BAY
CABIN TEMP CONTROLLER 1
CABIN TEMP CONTROLLER 2
TYPICAL AVERAGE ECLSS FAN DELTA PRESSURES
ECLSS ROTATING EQUIPMENT AVERAGE RUN/STALL CURRENTS
USER'S DATA
FREE CONVECTION AIR-COOLED EQUIPMENT
MAX IN TEMP 95°F
MAX OUT TEMP 130° F
NOMINAL 1 FAN AIR FLOW 675 LBS/HR
AV BAY 1 AIR OUT TEMP
AV BAY 2 AIR OUT TEMP
AV BAY 3 AIR OUT TEMP
AV BAY 1 FAN A/P
AV BAY 2 FAN A/P
AV BAY 3 FAN A/P
AVIONICS BAY 1 HEAT EXCHANGER
AVIONICS BAY 2 HEAT EXCHANGER
AVIONICS BAY 3 HEAT EXCHANGER
CABIN FAN
IMU FAN
IMU HEAT
CABIN AIR INLET TEMP 95°F AT 14.7 PSIA
NOMINALLY 1 FAN IS ON
AIR FLOW 164 LBS/HR
MAX OUT TEMP 130°F
TO CABIN
CABIN TEMP
CABIN TEMP ERROR LOGIC AND PULSE GENERATOR
OUTPUT ENABLED EVERY 5 SECONDS
INCREASE CABIN TEMP
DECREASE CABIN TEMP
ANTICIPATOR TEMP NO 1
ANTICIPATOR TEMP NO 2
+7.5VDC
+12VDC
AC/DC CONVERTER
REGULATOR
HUMIDITY SEPARATOR
HUMIDITY SEP
CABIN T CNTLR
IMU FAN A
IMU FAN B
IMU FAN C
SPEED NORM
BYPASS FLOW
FULL BYPASS FLOW
INCREASE BYPASS FLOW
INCREASE HX FLOW
FULL HX FLOW
CONTROLLER NO 1
CONTROLLER NO 2
TEMP
HX
WATER CHECK VLVS
GAS CHECK VALVES
SEP B MESH SCREEN
40 X 40
40 WATTS
(41,43LBS/HR)
ECLSS SCS
ECLSS SCT
ECLSS SCU
ECLSS SCV
ECLSS SCW
ECLSS SCX
ECLSS SCY
ECLSS SCZ
ECLSS SC1
ECLSS SC2
ECLSS SC3
ECLSS SC4
ECLSS SC7
0 TO 5.0 IN-H2O
0 TO 1 IN-H2O
0 TO 100 PCT
ARS H2O LOOP 1
ARS H2O LOOP 2
10 CAW
12 CAW
CAB T CNTR 1 FULL HX
CAB T CNTR 2 FULL HX
CAB FAN A PH A ON
CAB FAN B PH A ON
CAB FAN A PH A OFF
CAB FAN B PH A OFF
HUM SEP A PH A ON
HUM SEP B PH A ON
HUM SEP A PH A OFF
HUM SEP B PH A OFF
HUM SEP B SPEED NORM
CAB TEMP CNTR 1
CAB TEMP CNTR 2
CAB TEMP SEL 1 POSN
CAB TEMP SEL 2 POSN
IMU FAN A PH A ON
IMU FAN B PH A ON
IMU FAN C PH A ON
IMU FAN A PH A OFF
IMU FAN B PH A OFF
IMU FAN C PH A OFF
IMU FAN A SPEED NORM
IMU FAN B SPEED NORM
IMU FAN C SPEED NORM
CABIN TEMP SEL 1 POSN
CABIN TEMP SEL 2 POSN
CABIN TEMP CNTR 1
CABIN TEMP CNTR 2
HUM SEP A PH A ON
HUM SEP B PH A ON
HUM SEP A PH A OFF
HUM SEP B PH A OFF
HUM SEP B SPEED NORM
CAB T CNTR 1 FULL HX
CAB T CNTR 2 FULL HX
CAB FAN A PH A ON
CAB FAN B PH A ON
CAB FAN A PH A OFF
CAB FAN B PH A OFF
IMU FAN A PH A ON
IMU FAN B PH A ON
IMU FAN C PH A ON
IMU FAN A PH A OFF
IMU FAN B PH A OFF
IMU FAN C PH A OFF
IMU FAN A SPEED NORM
IMU FAN B SPEED NORM
IMU FAN C SPEED NORM
CABIN TEMP SEL 1 POSN
CABIN TEMP SEL 2 POSN
CABIN TEMP CNTR 1
CABIN TEMP CNTR 2
CUMULATIVE (AMPS/PHASE)
CURRENT (AMPS/PHASE)
EQUIPMENT
RUN
STALL
CABIN FAN
IMU FAN
AV BAY FAN
HUM SEP
CABIN FAN
IMU FAN
AV BAY 1
AV BAY 2
AV BAY 3
IMU FAN
0V 102
0V 103
0V 104
DELTA PRESSURES (IN. H2O)
10.2
14.7
10.2
14.7
10.2
14.7
6.52
5.78
4.35
6.06
4.36
4.60
4.33
4.24
3.30
4.09
3.21
4.44
4.39
3.66
3.10
2.42
4.60
3.22
2.54
3.30
2.60
4.35
4.34
3.30
4.45
3.43
C_AIR = 0.29 BTU/LB °F
T_IN AIR = 12.5 PSIA @ 14.7 PSI
1 WATT = 3.413 BTU/HR
1 LB/HR = 0.293 WATTS
1 LB/HR = 1.8 BTU/HR
1 WATT = 1 JOULE/SEC
1 WATT = 1 VOLT-AMP
1 WATT = 1 AMP-VOLT
1 WATT = 1 OHM-AMP SQUARED
1 WATT = 1 VOLT SQUARED/OHM
1 WATT = 1 AMP SQUARED-OHM
1 WATT = 1 VOLT-AMP REACTIVE

DATE= 10/06/90
NAME= CAR
VERSION= INK=2
W
V
U
T
S
R
Q
P
O
N
8
7
6
5
4
3
2
1
AVIONICS BAY 1
AVIONICS BAY 2
AVIONICS BAY 3
(BAY 3A)
FORCED CONVECTION AIR-COOLED EQUIPMENT
FREE CONVECTION AIR-COOLED EQUIPMENT
ECLSS BAY
MAX IN TEMP 95°
MAX OUT TEMP 130° F
SHELF 3
AIR DATA XDUCER NO 1 AND 3 (30 LBS/HR EA) 60.8 WATTS EA
MSBLS DECODER NO 1 (30 LBS/HR) 70 WATTS
TACAN NO 1 (73 LBS/HR) 164 WATTS
SHELF 4
CPU NO 1 AND NO 4 (163 LBS/HR EA) 313 WATTS EA
IOP NO 1 AND NO 4 (192 LBS/HR EA) 340 WATTS EA
SHELF 1
ACCELEROMETER NO 1 AND 4 (2.4 WATTS EA)
SHELF 3
INV DIST AND CONTR NO 1 (2.7 WATTS)
COMP INTERFACE UNIT (7 WATTS)
MSBLS RF ASSY NO 1 (15.4 WATTS)
BRAKE SKID CONTR NO 1 (19.2 WATTS)
LG PROXIMITY BOX NO 1 (8 WATTS)
SMOKE DETECTOR A
8.9 WATTS EA
SMOKE DETECTOR B
AVIONICS BAY 1 FIRE BOTTLE
AV BAY 1 FAN A
AV BAY 1 FAN B
AV BAY 1 FAN
AV BAY 1 FAN A PH A ON
AV BAY 1 FAN B PH A ON
AV BAY 1 FAN A PH A OFF
AV BAY 1 FAN B PH A OFF
AV BAY 1 AIR OUT TEMP
45 TO 145°F
AV BAY 1 FAN ΔP
0 TO 5.0 IN-H2O
NOMINAL 1 FAN AIR FLOW 875 LBS/HR
180 WATTS
70μ
ARS H2O LOOP 2
ARS H2O LOOP 1
AVIONICS BAY 1 HEAT EXCHANGER
TO C&W
ECLSS SC2
SHELF 3
AIR DATA XDUCER NO 2 AND 4 (30 LBS/HR EA) 60.8 WATTS EA
MSBLS DECODER NO 2 AND 3 (28 LBS/HR EA) 70 WATTS EA
TACAN NO 2 (71 LBS/HR) 164 WATTS
SHELF 4
CPU NO 2 AND NO 5 (158 LBS/HR EA) 313 WATTS EA
IOP NO 2 AND NO 5 (186 LBS/HR EA) 340 WATTS EA
SHELF 1
ACCELEROMETER NO 2 AND 3 (2.4 WATTS EA)
SHELF 3
INV DIST AND CONTR NO 2 (2.7 WATTS)
MSBLS RF ASSY NO 2 AND 3 (15.4 WATTS EA)
BRAKE SKID CONTR NO 2 (19.2 WATTS)
LG PROXIMITY BOX NO 2 (8 WATTS)
SMOKE DETECTOR A
8.9 WATTS EA
SMOKE DETECTOR B
AVIONICS BAY 2 FIRE BOTTLE
AV BAY 2 FAN A
AV BAY 2 FAN B
AV BAY 2 FAN
AV BAY 2 FAN A PH A ON
AV BAY 2 FAN B PH A ON
AV BAY 2 FAN A PH A OFF
AV BAY 2 FAN B PH A OFF
AV BAY 2 AIR OUT TEMP
45 TO 145°F
AV BAY 2 FAN ΔP
0 TO 5.0 IN-H2O
NOMINAL 1 FAN AIR FLOW 875 LBS/HR
180 WATTS
70μ
ARS H2O LOOP 2
ARS H2O LOOP 1
AVIONICS BAY 2 HEAT EXCHANGER
TO C&W
ECLSS SC3
SHELF 3
TACAN NO 3 (117 LBS/HR) 164 WATTS
SHELF 4
CPU NO 3 (282 LBS/HR) 313 WATTS
IOP NO 3 (310 LBS/HR) 340 WATTS
C&W (52 LBS/HR) 35 WATTS
SHELF 1
S-BAND FM SIG PROC (3.8 WATTS)
SHELF 2
S-BAND FM MULTIPLEXER (0 WATTS)
S-BAND ANT SW ASSY (2) (.6 WATT EA)
S-BAND FM RF SW (.9 WATTS)
SHELF 3
INV DIST AND CONTR NO 3 (2.7 WATTS)
SMOKE DETECTOR A
8.9 WATTS EA
SMOKE DETECTOR B
AVIONICS BAY 3 FIRE BOTTLE
AV BAY 3 FAN A
AV BAY 3 FAN B
AV BAY 3 FAN
AV BAY 3 FAN A PH A ON
AV BAY 3 FAN B PH A ON
AV BAY 3 FAN A PH A OFF
AV BAY 3 FAN B PH A OFF
AV BAY 3 AIR OUT TEMP
45 TO 145°F
AV BAY 3 FAN ΔP
0 TO 5.0 IN-H2O
NOMINAL 1 FAN AIR FLOW 675 LBS/HR
180 WATTS
70μ
ARS H2O LOOP 2
ARS H2O LOOP 1
AVIONICS BAY 3A HEAT EXCHANGER
TO C&W
ECLSS SC4
FAN A
FAN B
FAN C
IMU FAN
IMU FAN A
IMU FAN B
IMU FAN C
IMU FAN A PH A ON
IMU FAN A PH A OFF
IMU FAN B PH A ON
IMU FAN B PH A OFF
IMU FAN C PH A ON
IMU FAN C PH A OFF
IMU FAN ΔP
0 TO 7 IN-H2O
IMU FAN B SPEED NORM
IMU FAN C SPEED NORM
50 WATTS
CABIN T CNTLR
GSE
LF1
PFT BUS 1
PFT BUS 2
FMCA1
FMCA2
CNTLA1
PNL L4H L
PNL L4H G
PNL L4H H
PNL L4I L
PNL L1A2
ECLSS ROTATING EQUIPMENT AVERAGE RUN/STALL CURRENTS
CURRENT (AMPS/PHASE)
EQUIPMENT
RUN
STALL
CABIN FAN
1.7
7.4
AV BAY FAN
0.72
2.0
IMU FAN
0.17
0.5
HUM SEP
0.28
0.8
TYPICAL AVERAGE ECLSS FAN DELTS P'S
DELTA PRESSURES (IN. H20)
OV 102
OV 103
OV 104
14.7
10.2
CABIN FAN
6.52
5.78
4.35
6.06
4.36
AV BAY 1
3.40
3.22
2.54
3.30
2.60
AV BAY 2
3.44
3.39
2.66
3.10
2.42
AV BAY 3
4.33
4.24
3.30
4.09
3.21
IMU FAN
4.35
4.34
3.30
4.45
3.43
USEFUL DATA:
C_p AIR = 0.25 BTU/LB °F
1 LB_m AIR = 12.5 FT^3 @ 14.7 PSI

DATE: 09/03/93	NAME: JMB	VERSION: BPT.24
DATE: 09/22/93	NAME: VSH	VERSION: INK.5
DATE: 10/07/93	NAME: MDU	VERSION: INK.6

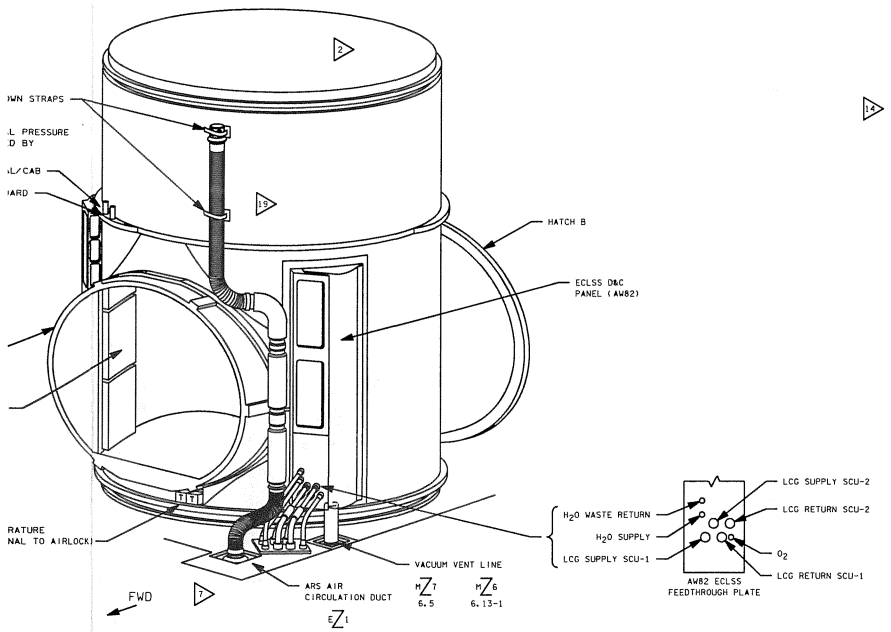

ARS DUCT STOWED POSITION
(NON-MODULE FLIGHTS)

AIRLOCK

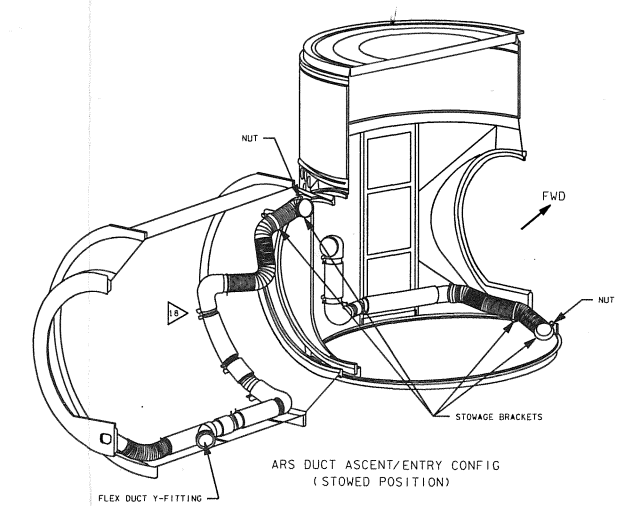

ARS DUCT ASCENT/ENTRY CONFIG
(STOWED POSITION)

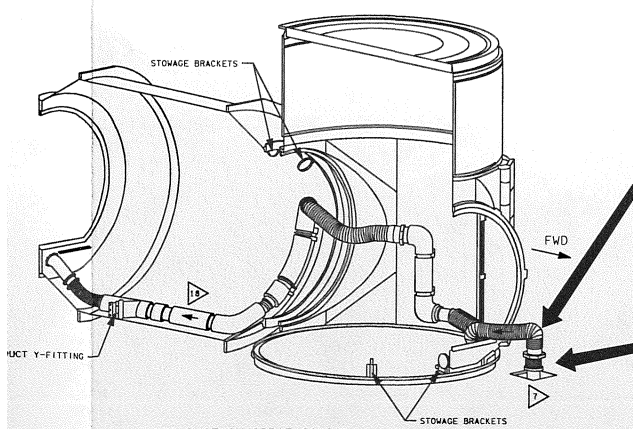

ARS DUCT ON-ORBIT CONFIG

AIRLOCK AND TUNNEL ADAPTER
(SPACELAB OR SPACEHAB CONFIG)

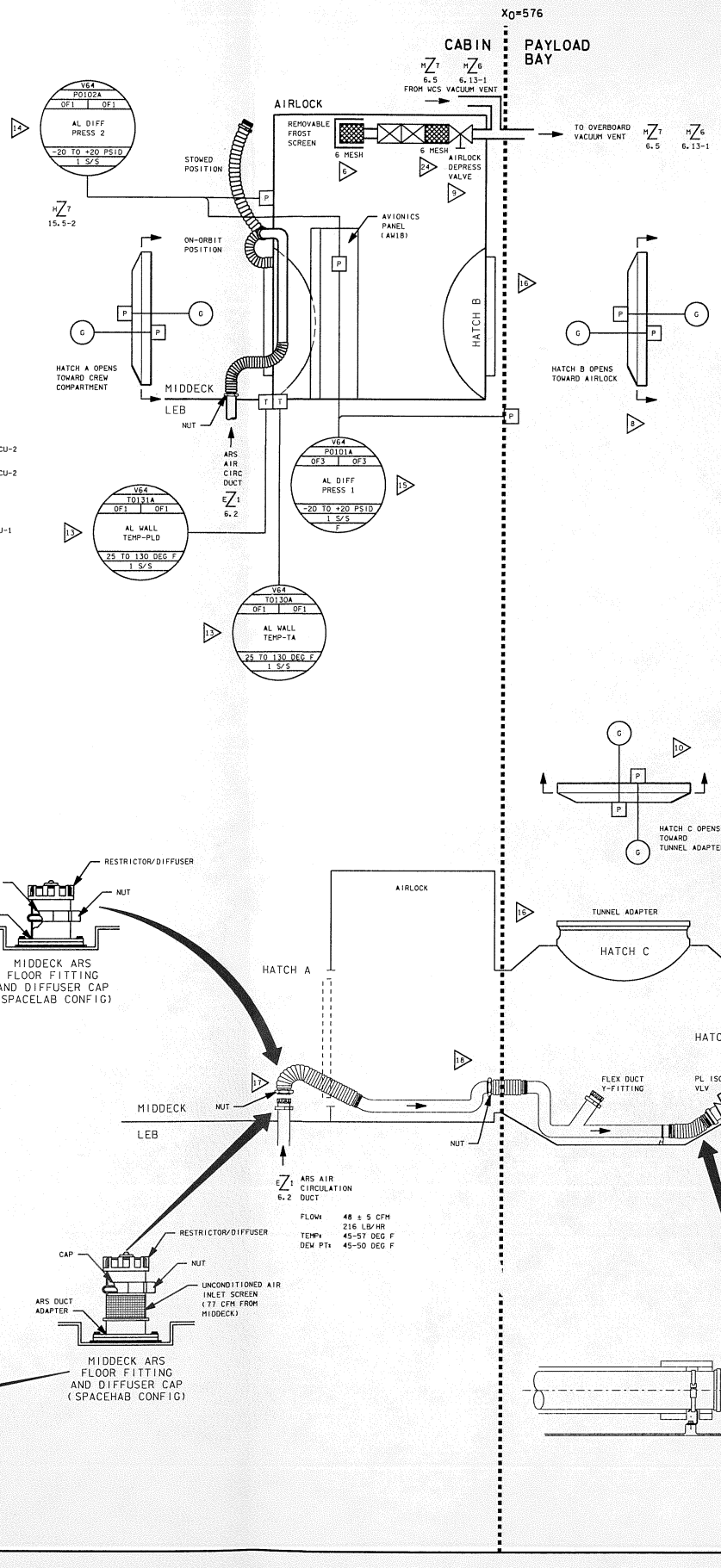

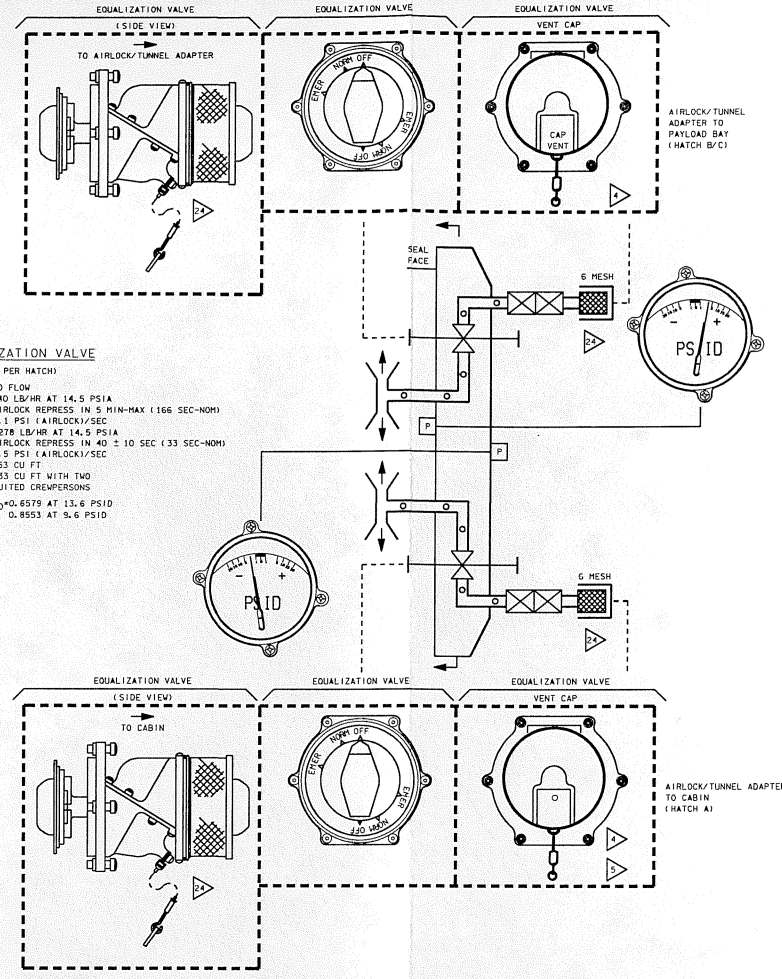

EQUALIZATION VALVE

(2 PER HATCH)

OFF - NO FLOW
NORM - 240 LB/HR AT 14.5 PSIA
AIRLOCK REPRESS IN 5 MIN-MAX (166 SEC-NOM)
0.1 PSI (AIRLOCK)/SEC
EMER - 1278 LB/HR AT 14.5 PSIA
AIRLOCK REPRESS IN 40 ± 10 SEC (33 SEC-NOM)
0.5 PSI (AIRLOCK)/SEC
AL VOL: 153 CU FT
153 CU FT WITH TWO SUITED CREWPERSONS
C_D=0.6579 AT 13.6 PSID
0.8553 AT 9.6 PSID

NOTES:

1. THE INTENT OF THIS DRAWING IS TO SHOW ONLY:
   A. THE ECLSS/AIRLOCK INTERFACES
   B. AIRLOCK INSTRUMENTATION
   C. BASIC AIRLOCK PLACEMENT/ORIENTATION

24. VALVE INLET FILTER SCREENS ARE ON ALL EQUALIZATION VALVES AND THE DEPRESS VALVE AND ARE NOT REMOVABLE
23. A FULL EMU H_2O RECHARGE IS EQUIVALENT TO 6% OF ORBITER H_2O TANK QUANTITY
22. BACTERIA CARTRIDGE/POTABLE WATER FILTER (ITEM 416) CONSISTS OF IODINE IMPREGNATED EPOXY BEADS FOLLOWED BY A 2μ SCREEN
21. THE PORTABLE OXYGEN SUPPLY (POS) QD'S WERE ORIGINALLY INTENDED FOR USE BY THE EVA CREWMEMBERS DURING PREBREATHE ACTIVITIES. HOWEVER, MORE EFFICIENT PREBREATHE SYSTEMS HAVE BEEN IMPLEMENTED AND THESE QD'S HAVE NEVER BEEN USED
20. THE CAP IS INSTALLED FOR ASCENT/ENTRY AS A BACKUP TO THE PAYLOAD ISOL VALVE FOR PRESSURE INTEGRITY. IT IS REMOVED ON-ORBIT DURING SPACELAB ACTIVATION
19. THE FLEXIBLE PORTIONS OF THE ARS AIR CIRCULATION DUCT ARE REMOVED FOR MODULE FLIGHTS. FOR NON-MODULE FLIGHTS, ONLY THE UPPER FLEX HOSE IS EXPOSED. ALL OTHER PARTS ARE COVERED BY CLOSEOUT PANELS
18. ARS AIR CIRCULATION DUCT
    FOR SPACELAB MODULE: =2.86 IN. DIA AND FLOWS 48 CFM (3 IN. O.D.)
    FOR SPACEHAB MODULE: =3.86 IN. DIA AND FLOWS 125 CFM (4 IN. O.D.)
    (48 CFM CONDITIONED, 77 CFM UNCONDITIONED)
17. IN POST INSERTION, DIFFUSER CAP IS REMOVED FROM FLOOR FITTING AND INSTALLED ON THE FLEX DUCT Y-FITTING IN THE TUNNEL ADAPTER
16. FOR TUNNEL ADAPTER CONFIGURATION, HATCH B IS PHYSICALLY REMOVED AND REINSTALLED IN THE C LOCATION
15. AL DIFF PRESS 1 MEASURES DIFFERENTIAL PRESSURE BETWEEN AIRLOCK AND PAYLOAD BAY
14. AL DIFF PRESS 2 MEASURES DIFFERENTIAL PRESSURE BETWEEN CABIN AND AIRLOCK
13. SERVES AS BACKUP TO MIDDECK TEMPERATURE SENSORS. THEY ARE LOCATED ON THE INNER SIDE OF THE AIRLOCK WALL, BELOW HATCH A, AND ARE NOT ACCESSIBLE OR VISIBLE BY THE CREW
12. FITTINGS TORQUED TO 10-14 FT-LBS
11. FITTINGS TORQUED TO 15-25 FT-LBS
10. HATCH IS PHYSICALLY LOCATED INSIDE TUNNEL ADAPTER
9. A/L DEPRESS VALVE PHYSICALLY LOCATED ON PANEL AW82B
8. HATCH IS PHYSICALLY LOCATED INSIDE AIRLOCK
7. TWO AIRLOCK "AIR CIRCULATION DUCT" CONFIGURATIONS EXIST, HOWEVER, ONLY ONE IS FLOWN AT ANY GIVEN TIME
6. THE DEBRIS SCREEN ASSEMBLY IS FRICTION FIT. IT IS EASILY REMOVED VIA A STRAIGHT PULL ON A HANDLE AND IS TETHERED TO THE VALVE BODY WITH A WIRE CABLE. REMOVAL CAPABILITY IS PROVIDED IN CASE OF FROST BUILDUP ON THE SCREEN DURING DEPRESS. IN THIS CASE, THE SCREEN CAN BE REMOVED AND THE DEPRESS CONTINUED
5. THE MANUALLY OPERATED PRESSURE BLEED VALVE HAS BEEN REMOVED FROM THE VENT CAPS (2) ON THE AIRLOCK/TUNNEL ADAPTER TO CABIN HATCH EQUALIZATION VALVES (HATCH A). A 0.18 INCH DIAMETER ORIFICE IS EXPOSED TO PREVENT AIRLOCK OVERPRESSURIZATION WITH AN O_2 LEAK INTO THE AIRLOCK OF UP TO 21.3 LB/HR AT 14.5 PSIA
4. THE VENT CAPS OF ALL HATCH EQUALIZATION VALVES AND THE AIRLOCK DEPRESS VALVE ARE THREADED AND MUST BE ROTATED TO BE REMOVED. A MANUALLY OPERATED PRESSURE BLEED VALVE IS LOCATED ON THE VENT CAP TO ALLOW PRESSURE EQUALIZATION ACROSS THE CAP (SEE NOTE 5). AN IDENTICAL VALVE SELECT KNOB WITH DETENTS IS LOCATED ON EACH SIDE OF THE EQUALIZATION VALVES. E.G. THEY CAN BE OPERATED FROM EITHER SIDE. DISCHARGE COEFFICIENT (C_D)=0.59
3. THE ECLSS/SCU INTERFACES SHOWN ARE FIXED DYNA-TUBE CONNECTORS (EXCEPT ELECTRICAL). FOR DETAILS OF THE SCU/EMU INTERFACES, REFER TO FIG 2.2-25, VOLUME 15 OF THE SFOH
2. THE ORIENTATION OF THE AIRLOCK AND ITS CONTROLS AND DISPLAYS IS INVERTED 180 DEGREES FROM THE ORBITER CREW COMPARTMENT 1-G ORIENTATION

3 AEI

SIGNATURE	DATE	NATIONAL AERONAUTICS AND SPACE ADMINISTRATION LYNDON B. JOHNSON SPACE CENTER HOUSTON, TEXAS	
DSGN P. SHERRILL	5/10/78		
DR		AIRLOCK/ECLSS INTERFACES	
ENGR T. DOCKINGS DOERING			
ENG	4/30/93		
APP	10/5/93		
APP	11/1/93	SPACE SHUTTLE	DWG NO 6.3
CADS R.K. Kimbrew	10-8-93	ALL	
LTR E PCN 3		121 X 34	PAGE SHEET 1 OF 2

BASIC REV E-3

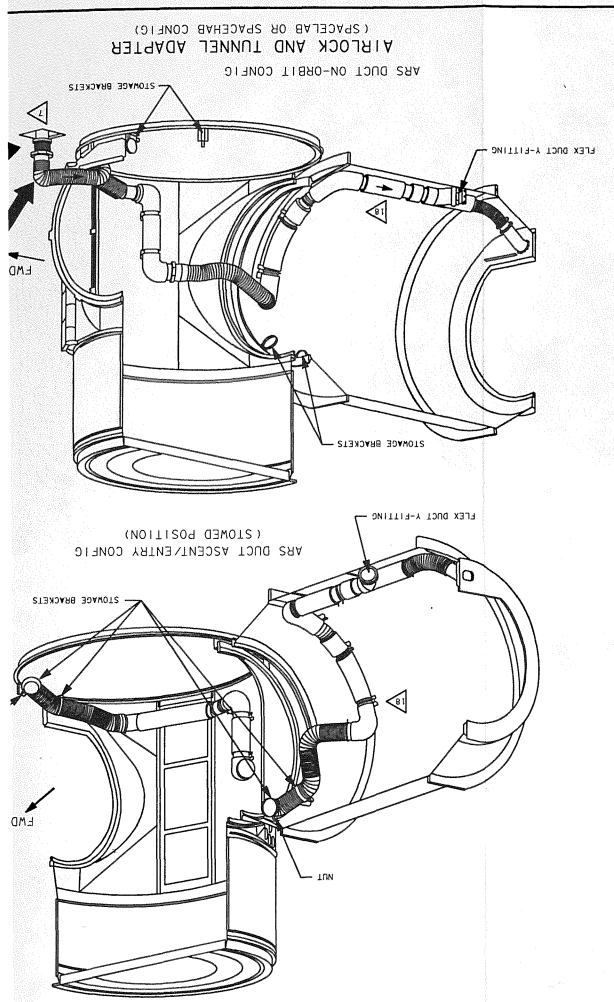
AIRLOCK AND TUNNEL ADAPTER
(SPACELAB OR SPACEHAB CONFIG)
ARS DUCT ON-ORBIT CONFIG
STOWAGE BRACKETS
FLEX DUCT Y-FITTING
FWD
STOWAGE BRACKETS
ARS DUCT ASCENT/ENTRY CONFIG
(STOWED POSITION)
FLEX DUCT Y-FITTING
STOWAGE BRACKETS
FWD
NUT
AIRLOCK
ARS DUCT STOWED POSITION
(NON-MODULE FLIGHTS)
FWD
VACUUM VENT LINE
ARS AIR CIRCULATION DUCT
AIRLOCK WALL TEMPERATURE SENSORS (2) (INTERNAL TO AIRLOCK)
AVIONICS DAC PANEL (AW81)
HATCH A
HATCH
* AL/OVERBOARD
AIRLOCK DIFFERENTIAL PRESSURE SENSORS (2) (COVERED BY CLOSEOUT PANELS) *
HOLD DOWN STRAPS

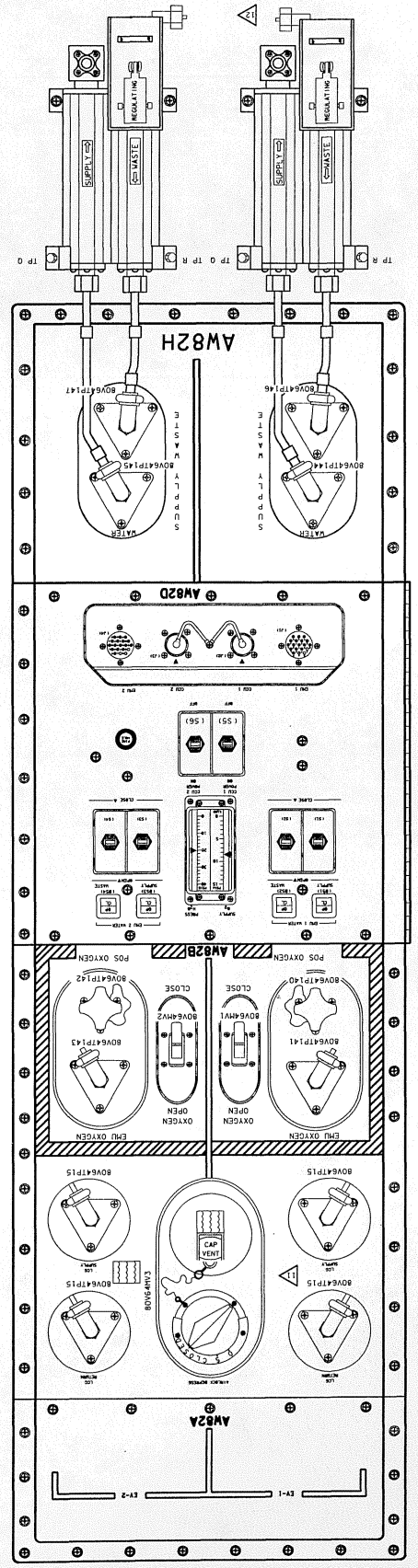
SUPPLY
CONTAM
REGULATING
TP O
TP R
AW82H
BOV64TP144
BOV64TP145
BOV64TP146
BOV64TP147
WATER SUPPLY
AW82D
(55)
(56)
AW82A
EV-1
EV-2
CAP VENT
CONTAM DOOR
BOV64TP15
AW82B
POS OXYGEN
EMU OXYGEN
OXYGEN OPEN
CLOSE
BOV64TP141
BOV64TP142
BOV64MV1
BOV64MV2
BOV64TP143
BOV64TP140
ECLSS D&C PANEL

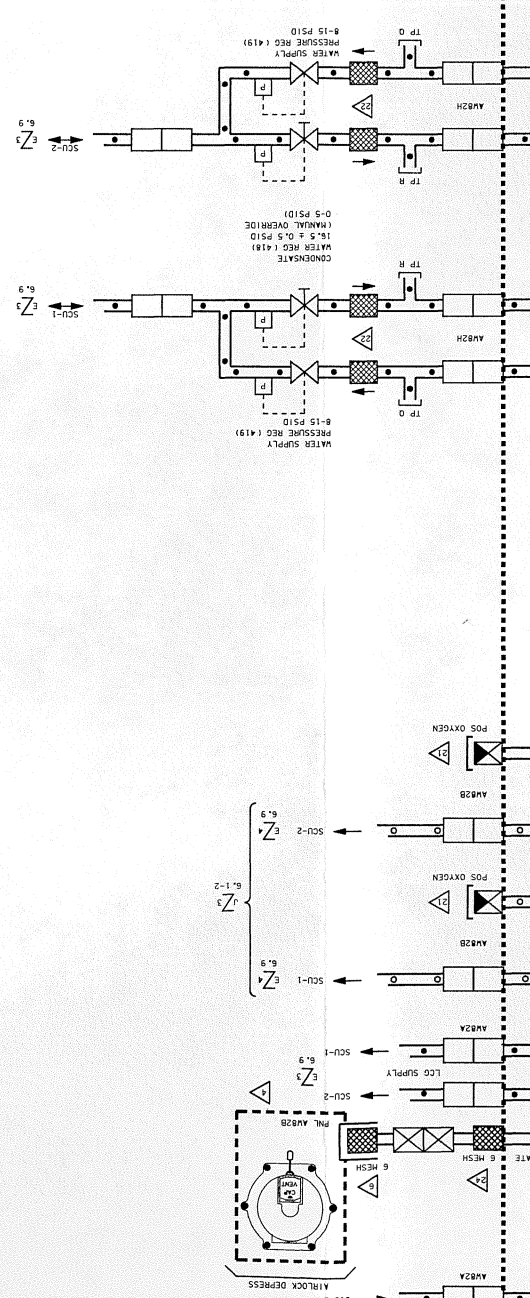
TP O
TP R
AW82H
WATER SUPPLY
PRESSURE REG (419)
8-15 PSIO
SCU-2
SCU-1
CONDENSATE
WATER REG (418)
15.5 ± 0.5 PSIO
(MANUAL OVERRIDE
0-15 PSIO)
AW82A
POS OXYGEN
AW82B
SCU-2
SCU-1
LCC SUPPLY
LCC RETURN
6 MESH
PRESS
HANDLE
TO ROTATE
AIRLOCK DEPRESS
PWL AW828
VACUUM VENT LINE
TO OVERBD
ECLSS D&C PANEL

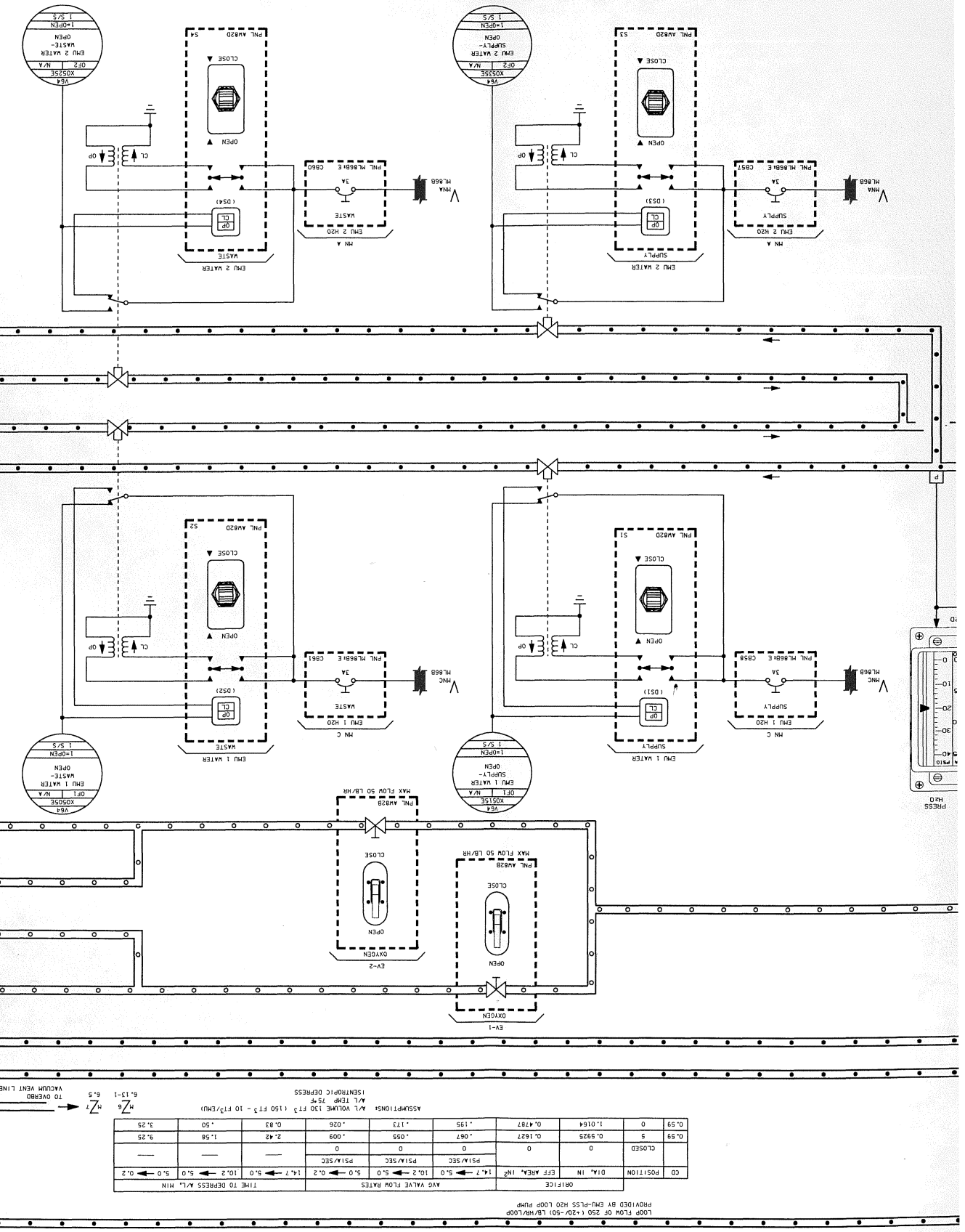
EMU 2 WATER
WASTE-
WATER
SUPPLY-
OPEN
1 S/S
1=OPEN
VOA4
XO52SE
OP2
N/A
EMU 2 WATER
SUPPLY
WASTE
PWL AW820
S4
CLOSE
OPEN
OP
CL
(054)
EMU 2 H2O
WASTE
PWL MLB68E
CB60
MNA
ML868
EMU 2 H2O
SUPPLY
PWL MLB68E
CB61
EMU 1 WATER
WASTE-
WATER
SUPPLY-
OPEN
1 S/S
1=OPEN
VOA4
XO51SE
OP1
N/A
EMU 1 WATER
SUPPLY
WASTE
PWL AW820
S1
S2
S3
CLOSE
OPEN
(051)
(052)
(053)
EMU 1 H2O
WASTE
PWL MLB68E
CB61
EMU 1 H2O
SUPPLY
PWL MLB68E
CB58
MNC
ML868
MAX FLOW 50 LB/HR
PWL AW828
CLOSE
OPEN
EV-2
EV-1
PRESS
H2O
LOOP FLOW OF 250 (+20/-50) LB/HR/LOOP
PROVIDED BY EMU-PLSS H2O LOOP PUMP
ASSUMPTIONS A/L VOLUME 130 FT³ (150 FT³ - 10 FT³/EMU)
A/L TEMP 75°F
ISENTROPIC DEPRESS
ORIFICE
AVG VALVE FLOW RATES
TIME TO DEPRESS A/L, MIN
CD
POSITION
DIA, IN
EFF AREA, IN²
14.7 → 5.0
10.2 → 5.0
5.0 → 0.2
14.7 → 5.0
10.2 → 5.0
5.0 → 0.2
0.59
0
1.0164
0.4187
0.59
5
0.5925
0.1627
CLOSED
0
0
PSIA/SEC
.195
.173
.026
.083
.50
3.25
.067
.055
.009
2.42
1.58
9.25
0
0
0
——
——
——

DATE: 10/07/93 | NAME: MDU | VERSION: INK 6

AW82 FEEDTROUGH PLATE

3/8 IN O.D. LEB/MIDDECK — ECLSS D&C PANEL

3/8 IN O.D.

ARS H2O LOOPS

LOOP 1

FLOW: 560-1350 LB/HR/LOOP
TEMP: 40-45 DEG F

LOOP 2

LCVG HX
MAX LOAD 4000 BTU/HR

P Z 1 7.4

P Z 2 7.4

3/8 IN O.D.

3/8 IN O.D.

LOOP FLOW OF 250 (+20/-50) LB/HR/LOOP
PROVIDED BY EMU-PLSS H2O LOOP PUMP

CD	POSITION	ORIFICE DIA, IN	ORIFICE EFF AREA, IN^2	AVG VALVE FLOW RATES 14.7 → 5.0 PSIA/SEC	AVG VALVE FLOW RATES 10.2 → 5.0 PSIA/SEC	AVG VALVE FLOW RATES 5.0 → 0.2 PSIA/SEC	TIME TO DEPRESS A/L, MIN 14.7 → 5.0	TIME TO DEPRESS A/L, MIN 10.2 → 5.0	TIME TO DEPRESS A/L, MIN 5.0 → 0.2
	CLOSED	0	0	0	0	0	——	——	——
0.59	5	0.5925	0.1627	.067	.055	.009	2.42	1.58	9.25
0.59	0	1.0164	0.4787	.195	.173	.026	0.83	.50	3.25

ASSUMPTIONS: A/L VOLUME 130 FT^3 (150 FT^3 - 10 FT^3/EMU)
A/L TEMP 75°F
ISENTROPIC DEPRESS

P Z 6 6.13-1 — P Z 7 6.5 — TO C VACU

EV-1 OXYGEN — OPEN — CLOSE — PNL AW82B MAX FLOW 50 LB/HR

EV-2 OXYGEN — OPEN — CLOSE — PNL AW82B MAX FLOW 50 LB/HR

02 SUPPLY CRYO
PRESS: 900 ± 50 PSIG
(803 - 882 PSIG NOM)
MAX FLOW: 50 LB/HR/2 SYSTEMS
QTY: APPROX 1.2 LB/EMU RECHARGE (FULL)

1/4 IN O.D.

K Z 4 6.1-2

P

V64 P0202A OF3 | OF3 — EVLSS O2 SUPPLY PRESS — 0-1500 PSIA — 1 S/S

SUPPLY PRESS O2 H2O

PNL AW82D

V64 P0201A OF1 | OF1 — EVLSS H2O SUPPLY PRESS — 0-40 PSIG — 1 S/S

V64 X0515E OF1 | N/A — EMU 1 WATER SUPPLY-OPEN — 1=OPEN — 1 S/S

V64 X0505E OF1 | N — EMU 1 WATE WASTE-OPEN — 1=OPEN — 1 S/S

EMU 1 WATER SUPPLY

MN C — EMU 1 H2O SUPPLY — 3A — PNL ML868H E CB58

V_{MNC} ML86B

OP CL (DS1) — OPEN — CLOSE — PNL AW82D S1

CL OP

EMU 1 WATER WASTE

MN C — EMU 1 H2O WASTE — 3A — PNL ML868H E CB61

V_{MNC} ML86B

OP CL (DS2) — OPEN — CLOSE — PNL AW82D S2

CL OP

EMU WATER SUPPLY
PRESS: 15.5 - 16.5 PSIG
LOCKUP: 17.0 PSIG
RELIEF: 17.0 - 20.0 PSIG
FLOW: 100-130 LB/HR
FULL EMU RECHARGE:
10 LB H2O AT 70 DEG F
TIME: 6 MIN AT 10 PSIG

P3

K Z 3 6.4

P Z 1 6.13-1

K Z 5 6.5

EMU WASTE WATER
0-10 LB/EMU RECHARGE

EMU 2 WATER SUPPLY

MN A — EMU 2 H2O SUPPLY — 3A — PNL ML868H E CB57

V_{MNA} ML86B

OP CL (DS3) — OPEN — CLOSE — PNL AW82D S3

CL OP

V64 X0535E OF2 | N/A — EMU 2 WATER SUPPLY-OPEN — 1=OPEN — 1 S/S

EMU 2 WATER WASTE

MN A — EMU 2 H2O WASTE — 3A — PNL ML868H E CB60

V_{MNA} ML86B

OP CL (DS4) — OPEN — CLOSE — PNL AW82D S4

CL OP

V64 X0525E OF2 | N/ — EMU 2 WATE WASTE-OPEN — 1=OPEN — 1 S/S

DATE: 02/04/94	NAME: JMB	VERSION: BPT: 3
DATE: 06/02/94	NAME: MAG	VERSION: INR: 2
DATE: 07/25/94	NAME: MDU	VERSION: INR: 3

AVIONICS D&C PANEL

AVIONICS D&C PANEL
AW18H

AW18A

AW18D

AW18H

$Z_{2.2}$ V_{MNA} FPC1

$Z_{2.2}$ V_{MNB} FPC2

$Z_{2.2}$ $V_{CNTLA81}$ 1.2KΩ

$Z_{2.2}$ $V_{CNTLBC1}$ 1.2KΩ

POWER/BATTERY CHARGER
EMU 1
BUS SELECT
MNA
OFF
MNB
PNL AW18H S1

RPC 10A

RPC 10A

EMU POWER SUPPLY/BATTERY CHARGER 1
(TYPICAL)

DC/DC CONVERTER

900 MF

SHUNT

CURRENT REGULATION

SIGNAL COND

POWER MODE: LIMITED AT 10A
CHARGE MODE: LIMITED AT 1.55A ±0.5

LOAD REFLECTED TO MAIN BUSSES: (INCLUDES LOSSES IN POWER SUPPLY)
CHARGE MODE: 60 WATTS
POWER MODE: 14W TO 150W
(SUIT FANS 125W)
(COMMS 4W TO 10W)

CURRENT LIMITING

VOLTAGE REGULATION

MODE

VOLTAGE REGULATION

POWER MODE: REGULATION AT 18.5Σ 0.5VDC
CHARGE MODE: REGULATION AT 21.8VDC

MODE

SENSED VOLTAGE

SENSE RETURN

POWER/BATTERY CHARGER
EMU 1

POWER
OFF
CHARGE
PNL AW18H S3

EMU PWR 18.5±0.5VDC

EMU BATTERY CHG 1.55±0.5A

EMU PWR RETURN

MIKE SIGNAL

MIKE SIGNAL RETURN

EARPHONE SIGNAL

EARPHONE SIGNAL RETURN

PTT COMMON

XMIT

COMM INTERFACE
5Z7
16.10-4

EMU PWR SENSE

EMU BATTERY SENSE

EMU SENSE RETURN

AW82J J1

V64
CO211A
OF1 | N/A
EMU POWER SUPPLY 1 CURRENT
0 TO 5 AMP
1 S/S

V64
VO210A
OF1 | OF1
EMU POWER SUPPLY 1 VOLTAGE
0 TO 32VDC
1 S/S

V64
VO213A
OF1 | OF1
EMU POWER SUPPLY 2 VOLTAGE
0 TO 32VDC
1 S/S

V64
CO214A
OF1 | N/A
EMU POWER SUPPLY 2 CURRENT
0 TO 5 AMP
1 S/S

POWER/BATTERY CHARGER
EMU INPUT
EMU 1
EMU 2
PNL AW18H S4

EMU INPUT

VOLTS AMPS

PNL AW18H M1

POWER/BATTERY CHARGER
EMU 2
BUS SELECT
MNA
OFF
MNB
PNL AW18H S2

RPC 10A

RPC 10A

EMU POWER SUPPLY/BATTERY CHARGER 2
(TYPICAL)

POWER/BATTERY CHARGER
EMU 2
MODE

POWER
OFF
CHARGE
PNL AW18H S5

EMU PWR 18.5±0.5VDC

EMU BATTERY CHG 1.55±0.5A

EMU PWR RETURN

COMM INTERFACE
5Z7
16.10-4

EMU PWR SENSE

EMU BATTERY SENSE

EMU SENSE RETURN

AW82J J4

$Z_{6.9}$

▷1 OV102 LABEL IS 'MIDDECK'

▷2 THE ORIENTATION OF THE AIRLOCK AND ITS CONTROLS AND DISPLAYS IS INVERTED 180 DEGREES FROM THE ORBITER CREW COMPARTMENT ORIENTATION

NOTES: ▷3 THE INTENT OF THIS DRAWING IS TO SHOW ONLY:
A. THE ECLSS/AIRLOCK INTERFACES
B. AN OVERVIEW LEVEL OF THE POWER/BATTERY CHARGER MODULE
C. AIRLOCK INSTRUMENTATION
D. BASIC AIRLOCK PLACEMENT/ORIENTATION

3 AEI 2

SIGNATURE	DATE	NATIONAL AERONAUTICS AND SPACE ADMINISTRATION LYNDON B. JOHNSON SPACE CENTER HOUSTON, TEXAS	
DSGN P. SHERRILL	5/10/78		
DR		AIRLOCK/ECLSS INTERFACES	
ENGR T. DOELING			
ENGR	7/13/94		
APP		SPACE SHUTTLE	DWG NO 6.3
APP		ALL	
CADS S.K. Kimbrell	7/14/94		
LTR E	PCN 4	66 X 34	PAGE SHEET 2 OF 2

BASIC REV E-4

L K J I H G

8 7 6 5 4 3 2 1

AVIONICS D&C PANEL

MID DECK FLOOR

FWD HATCH

"AIRLOCK CEILING"

"AIRLOCK FLOOR"

MID DECK CEILING

AW18A

AW18D

AW18H

$Z_{2.2}$ V_{MNA} FPC1

$Z_{2.2}$ V_{MNB} FPC2

$Z_{2.2}$ $V_{CNTLAB1}$ 1.2KΩ

$Z_{2.2}$ $V_{CNTLBC1}$ 1.2KΩ

POWER/BATTERY CHARGER

EMU 1

BUS SELECT

MNA

OFF

MNB

PNL AW18H S1

RPC 10A

RPC 10A

POWER/BATTERY CHARGER

EMU 2

BUS SELECT

MNA

OFF

MNB

PNL AW18H S2

RPC 10A

RPC 10A

DATE: 03/13/91	NAME: JDF	VERSION: BPT.23
DATE: 04/01/91	NAME: SKK	VERSION: INK.4
DATE: 08/01/94	NAME: LAM	VERSION: INK.5

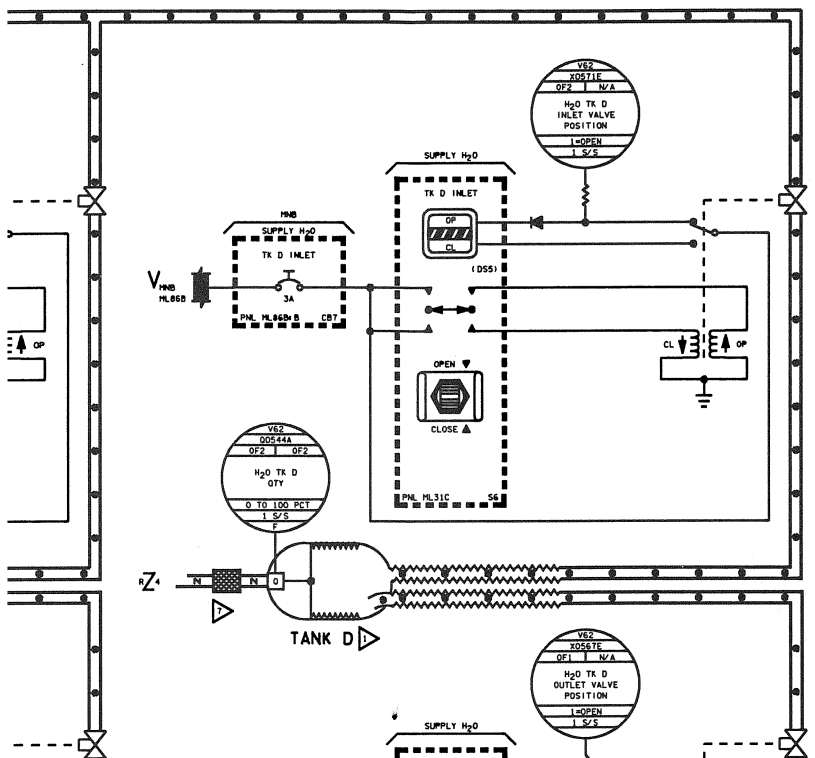

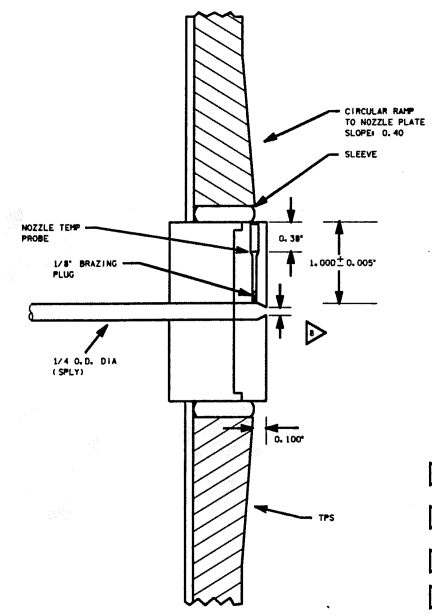

ACTUAL NOZZLE DIAMETER (ALL VEH)

	OV-102	OV-103	OV-104
SUPPLY DUMP NOZZLE	0.0565	0.052	0.0550

13. TP7 NOT ACCESSIBLE TO THE CREW

15. GAGE ON PANEL AW82D SAYS, "PRESS H20" "SEE DWG 6.3-1"

22. DYNATUBE FITTING

23. CONTINGENCY VACUUM HOSES
- LENGTH
  - BLUE/BLUE - 10 FT
  - RED/RED - 10 FT
  - YELLOW/YELLOW - 8 FT
- MATERIAL - TEFLON
- DIAMETER -1/4 IN OD
- FREE FLUID NOZZLE LENGTH - ~13 5/8 IN
- STOWED IN CONTINGENCY HOSE AND CABLE KIT

OD COMPATIBILITY

-1101	-3102
-1141	-3142
-1201	-3142, -3302
-1301	-3142, -3302

24. RESERVED

11. ALL SUPPLY H_2O TUBING IS 1/4" O.D. WITH .016" WALL THICKNESS UNLESS OTHERWISE INDICATED

10. REFER TO TABLE 6-1 FOR DRAWING REFERENCES

A H_2 SEPARATORS LOCATED IN ECLSS BAY AND SLIGHTLY FWD OF 576 BULKHEAD

B SPEC DIAMETER OF NOZZLE 0.056 ±0.005 INCHES

C 1µ HYDROPHOBIC FILTER PRECLUDES WATER FROM EXITING TANK TO N_2 SUPPLY LINES IN THE EVENT OF BELLOWS LEAK

D ALLOWS WASTE TANK WATER TO BE SUPPLIED IN A CONTINGENCY TO FES WHEN CONTINGENCY H_2O X-TIE WASTE QD CONNECTED TO SUPPLY H_2O QD. ALSO ALLOWS DUMP NOZZLES TO BE CROSS-TIED. SEE 23

E RELIEF VALVE
CRACK 0.8 PSID TO 2.5 PSID MAX
RESEAT 0.8 PSID MIN

F THE A AND B (REDUNDANT) LINE HEATERS ARE CONTINUOUSLY WRAPPED TOGETHER THE FULL LENGTH OF THE LINE FROM X_0=576

G DUMP NOZZLE
EXIT DIAMETER= .056 IN
MAX FLOW RATE= 185-195 LB/HR FLUID
1.5-2.0 LB/HR AIR
AVG FLOW RATE= 130-160 LB/HR FLUID

H MICROBIAL FILTER= RESIN IMPREGNATED WITH TRIIODIDE(-) FOR CONTACT BACTERIA KILL, NOT CHANGED OUT IN FLIGHT

NOTES:

1. WATER STORAGE TANKS
USABLE CAPACITY= 165 LBS
LENGTH= 35.5 IN
DIAMETER= 15.5 IN
WEIGHT= 39.5 LB
BELLOWS MATERIAL= INCONEL 718

* 4 SPLY H_2O

SIGNATURE	DATE	NATIONAL AERONAUTICS AND SPACE ADMINISTRATION LYNDON B. JOHNSON SPACE CENTER HOUSTON, TEXAS	
DSGN L. BUCHANAN	10/4/78		
DR L. BUCHANAN	10/1/79	SUPPLY WATER STORAGE	
ENGR J. H. SOLOMON			
ENGR	2/2/79		
APP	2/2/79		
APP		SPACE SHUTTLE	DWG NO 6.4
CADS S.K. Kimbrell 2-10-94		ALL	
LTR E PCN 4		126.5 X 34	PAGE SHEET 1 OF 1

BASIC REV E-4

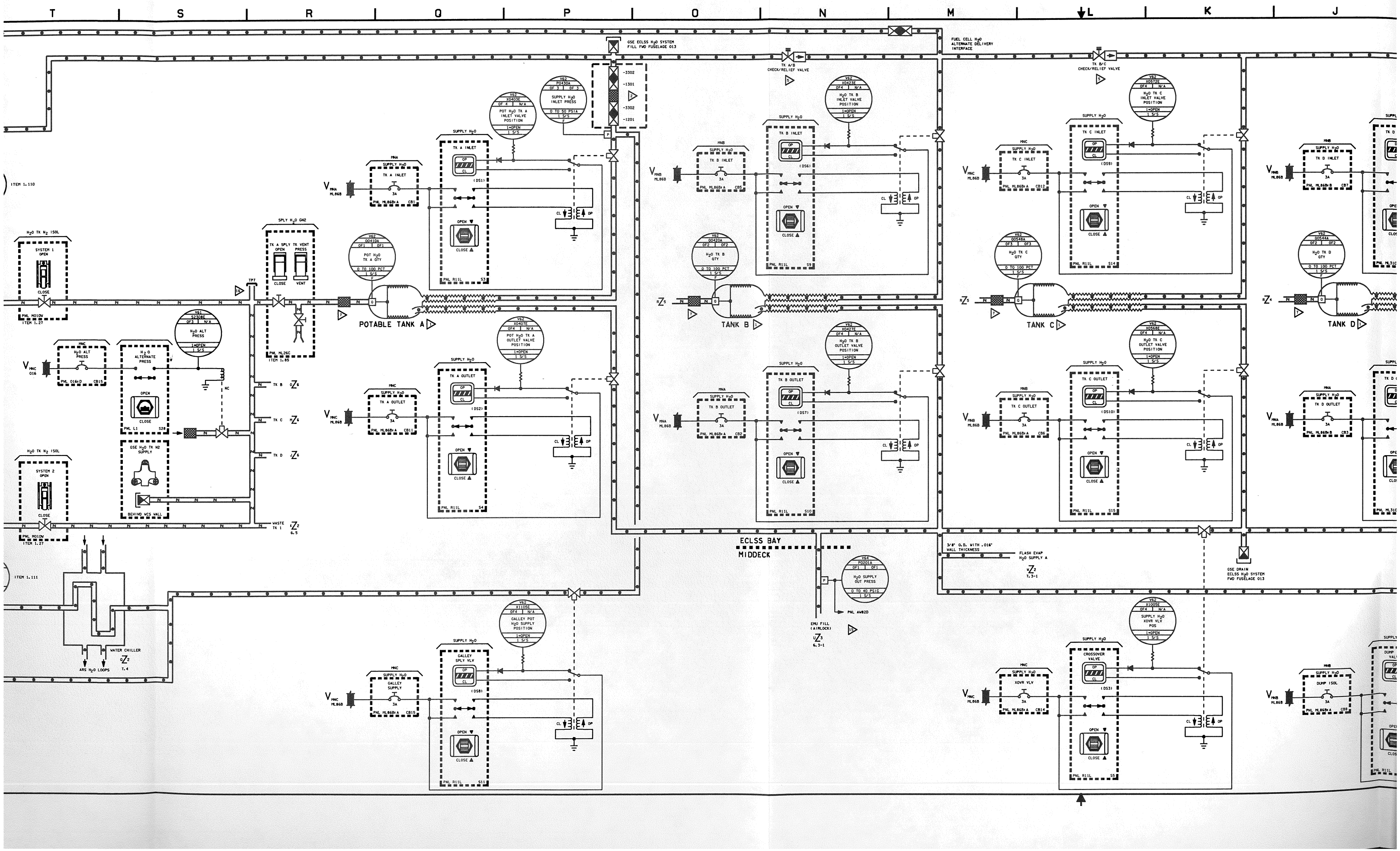

T
S
R
Q
P
O
N
M
L
K
J
GSE ECLSS H2O SYSTEM FILL FWD FUSELAGE 013
FUEL CELL H2O ALTERNATE DELIVERY INTERFACE
TK A/B CHECK/RELIEF VALVE
TK B/C CHECK/RELIEF VALVE
ITEM 1.110
H2O TK N2 ISOL
SYSTEM 1 OPEN
CLOSE
PNL M010V
ITEM 1.27
SPLY H2O GN2
TK A SPLY TK VENT
OPEN
PRESS
CLOSE
VENT
PNL ML26C
ITEM 1.85
POTABLE TANK A
TANK B
TANK C
TANK D
H2O ALT PRESS
H2O ALTERNATE PRESS
PNL L1
GSE H2O TK N2 SUPPLY
BEHIND WCS WALL
SYSTEM 2 OPEN
WASTE TK 1
ITEM 1.111
WATER CHILLER
ARS H2O LOOPS
ECLSS BAY
MIDDECK
H2O SUPPLY OUT PRESS
PNL AW82D
EMU FILL (AIRLOCK)
3/8" O.D. WITH .016" WALL THICKNESS
FLASH EVAP H2O SUPPLY A
GSE DRAIN ECLSS H2O SYSTEM FWD FUSELAGE 013
SUPPLY H2O
TK A INLET
TK B INLET
TK C INLET
TK D INLET
TK A OUTLET
TK B OUTLET
TK C OUTLET
TK D OUTLET
GALLEY SPLY VLV
GALLEY SUPPLY
CROSSOVER VALVE
XOVR VLV
DUMP ISOL

DATE= 08/01/94 | NAME= LAM | VERSION= INC= 5

W V U T S R Q P O N

8 7 6 5 4 3 2 1

FUEL CELL WATER
VAC VENT ISOL VLV
OVERBOARD
FROM VCS
1.93" ID
.218" ID
.218" ID
FUEL CELL WATER
V45 P0187A OF3 OF5 FC ALT H2O LINE PRESS 0 TO 50 PSIA 1 S/S
H2 SEPARATOR
H2 SEPARATOR
V81 P2307A OF1 OF1 H2O REG 1 PRESS 0 TO 20 PSIG 1 S/S F
ITEM 1.110
MID-FUSELAGE ECLSS BAY
H20 TK N2 REG ASSEMBLY
H2O TK N2 REG INLET SYSTEM 1 OPEN CLOSE PNL M01OV
18.5±1.5 PSIG RELIEF TO CABIN
15.5-17.0 PSIG
1 LB/HR MAX
TP22
H2O TK N2 ISOL SYSTEM 1 OPEN CLOSE PNL M01OV ITEM 1.27
ITEM 1.10
N2 SUPPLY
SPLY H2O GN2
TK A SPLY TK VENT PRESS OPEN CLOSE VENT
PNL M26C ITEM 1.85
TPT
V81 S2308E OF3 N/A H2O ALT PRESS 1=OPEN 1 S/S
MNC H2O ALT PRESS PNL 016D CB15
H2 O ALTERNATE PRESS OPEN CLOSE PNL L1 S28
NC
TK B
TK C
TK D
WASTE TK 1
GSE H2O TK N2 SUPPLY BEHIND WCS WALL
ITEM 1.10
H20 TK N2 REG ASSEMBLY
H2O TK N2 REG INLET SYSTEM 2 OPEN CLOSE PNL M01OW
18.5±1.5 PSIG RELIEF TO CABIN
15.5-17.0 PSIG
1 LB/HR MAX
TP21
H2O TK N2 ISOL SYSTEM 2 OPEN CLOSE PNL M01OW ITEM 1.27
N2 SUPPLY
V81 P2311A OF2 OF2 H2O REG 2 PRESS 0 TO 20 PSIG 1 S/S F
ITEM 1.111
CHILLED WATER LINE 45 TO 53° F
WATER CHILLER
ARS H2O LOOPS
AMBIENT WATER LINE 70° F
PNL M19ON
GSE ECLSS H2O SYSTEM FILL FWD FUSELAGE 013
TK A/B CHECK/RELIEF VALVE
V82 X0403E OF4 N/A POT H2O TK A INLET VALVE POSITION 1=OPEN 1 S/S
V82 P0430A OF3 OF3 SUPPLY H2O INLET PRESS 0 TO 50 PSIA 1 S/S
-3302 -1301 -3302 -1201
SUPPLY H2O TK A INLET OP CL (DS1) OPEN CLOSE PNL R11L S3
MNA SUPPLY H2O TK A INLET 3A PNL ML86B+A CB1
V MNA ML86B
V82 X0410A OF1 OF1 POT H2O TK A QTY 0 TO 100 PCT 1 S/S
POTABLE TANK A
SUPPLY H2O TK A OUTLET OP CL (DS2) OPEN CLOSE PNL R11L S4
MNC SUPPLY H2O TK A OUTLET 3A PNL ML86B+A CB1
V MNC ML86B
V82 X040TE OF4 N/A POT H2O TK A OUTLET VALVE POSITION 1=OPEN 1 S/S
SUPPLY H2O GALLEY SPLY VLV OP CL (DS8) OPEN CLOSE PNL R11L S11
MNC SUPPLY H2O GALLEY SUPPLY 3A PNL ML86B+A CB15
V MNC ML86B
V82 X110PE OF4 N/A GALLEY POT H2O SUPPLY POSITION 1=OPEN 1 S/S
V82 X0423E OF4 N/A H2O TK B INLET VALVE POSITION 1=OPEN 1 S/S
SUPPLY H2O TK B INLET OP CL (DS6) OPEN CLOSE PNL R11L S9
MNB SUPPLY H2O TK B INLET 3A PNL ML86B+A CB5
V MNB ML86B
V82 G0420A OF2 OF2 H2O TK B QTY 0 TO 100 PCT 1 S/S
TANK B
V82 X0427E OF4 N/A H2O TK B OUTLET VALVE POSITION 1=OPEN 1 S/S
SUPPLY H2O TK B OUTLET OP CL (DS7) OPEN CLOSE PNL R11L S10
MNA SUPPLY H2O TK B OUTLET 3A PNL ML86B+A CB2
V MNA ML86B
ECLSS BAY MIDDECK
V84 P0201 OF1 H2O SUP OUT PRE 0 TO 40 1 S/S
PNL AW82D
EMU FILL (AIRLOCK)

BASIC REV E-4

	A		
DATE: 07/15/93	NAME: JDF	VERSION: BPT: 44	
DATE: 08/24/93	NAME: PSD	VERSION: BPT: 45	
DATE: 09/07/93	NAME: VEM	VERSION: INK: 5	

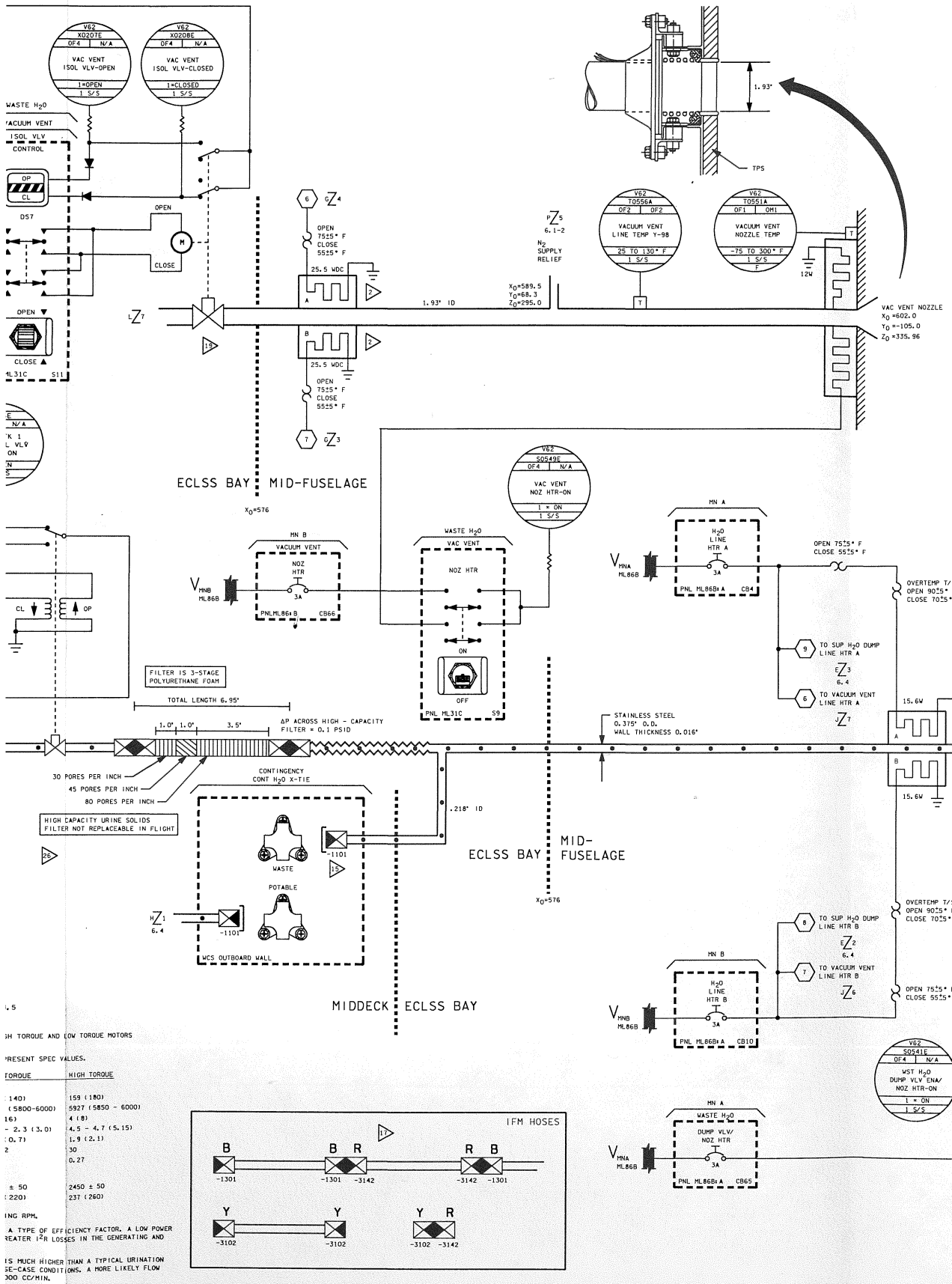

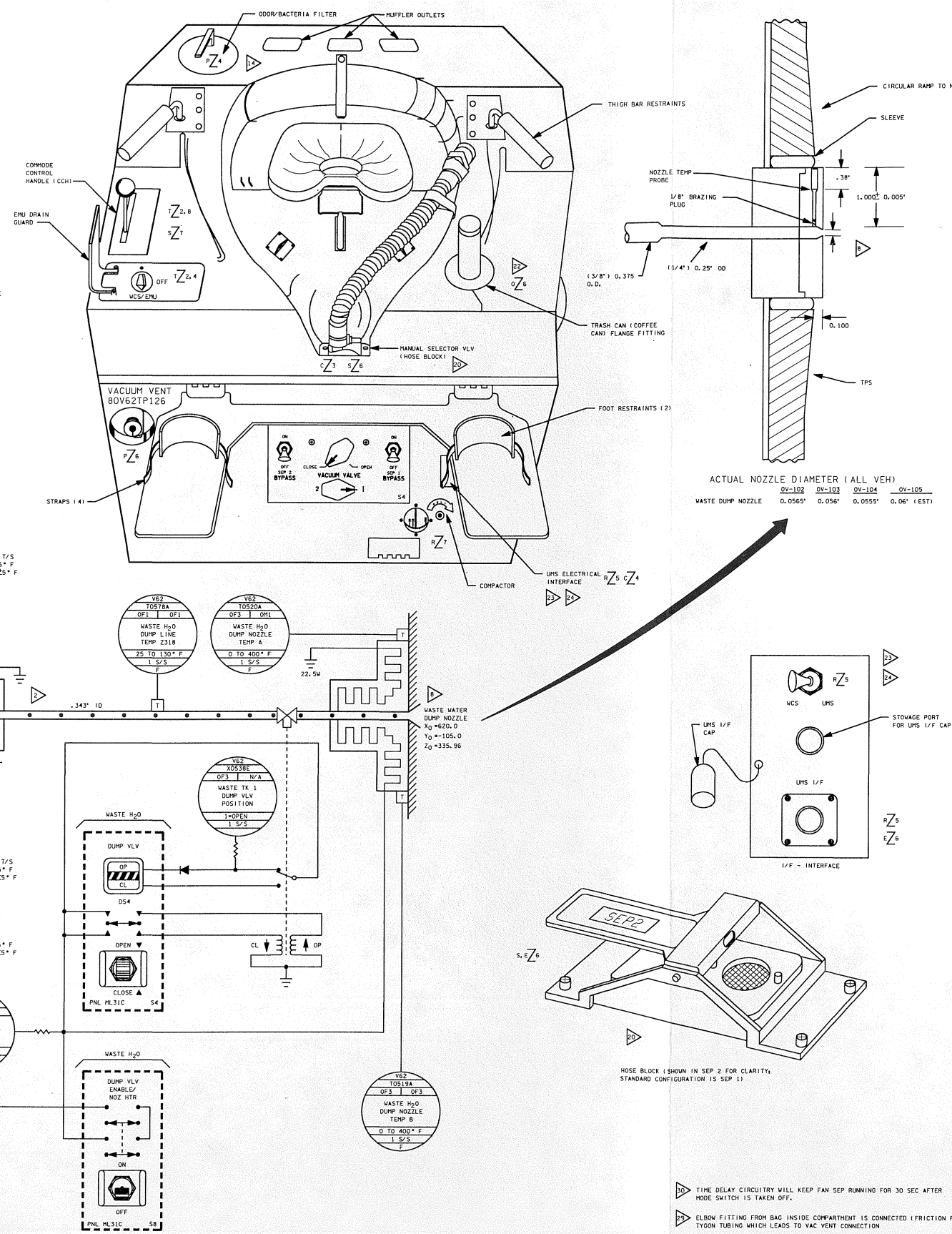

(20) A SPARE URINE SOLIDS FILTER IS CARRIED EACH FLIGHT. IT IS NOT A REPLACEMENT FOR THE INSTALLED DUMP LINE FILTER. SPARE FILTER IS DESIGNED TO BE UTILIZED IN COMBINATION WITH THE IFM Y-Y HOSE (SEE (17)) THROUGH THE CONTINGENCY XTIE WASTE QD

(21) LIOH BOX/ AUX WET TRASH BOX INSTALLED ON MISSION - SPECIFIC BASIS. OV-102, 104, 105 ARE SCARRED TO RECEIVE THIS CONFIG. BOX CONTAINS WET TRASH SPACE PLUS STORAGE FOR 9 CANS (TYPICALLY 8 LIOH CANS PLUS CHARCOAL OR ATCO)

(22) WCS/UMS SWITCH (SEE NOTE 23) ALLOWS FAN SEP 1 CONTROL BY UMS ELECTRONICS WHEN IN UMS POSITION. IN WCS POSITION, CONTROL REVERTS TO WCS. UMS DRAWING AND CONTROL DETAILS CAN BE FOUND IN FLIGHT SPECIFIC CARGO SYSTEMS MANUAL

(23) LOCATED ON A SPECIAL WCS KICKPLATE WHICH IS INSTALLED ONLY WHEN UMS IS FLOWN

(24) BEGINNING WITH STS-58, ALL CONVENTIONAL WCS FLY ONLY THIS FLANGE FITTING ONTO WHICH THE "COFFEE CAMP" (WCS TRASH CAN) AND ITS HOSE CAN FIT. THE BALLAST VLV IS NO LONGER FLOWN

(25) THE COMPACTOR DRIVE AND ELASTIC NET SHOULD ONLY BE USED ONCE. IT MAKES ROOM IN THE COMMODE BY COMPACTING THE FECAL MATTER INTO A SMALL AREA. MAX TRAVEL IS 330°. BACKGROUND INDICATOR IS NORMALLY WHITE, AND WILL SHOW YELLOW WHEN VANE (NET) IS UNDER TRANSPORT TUBE

(26) TO USE THE OTHER SEPARATOR, LIFT LEVER ARM UP, ROTATE THE MANUAL SELECTOR VALVE 180° AND LOCK IN PLACE

(27) VAC VENT ISOL VLV ORIFICE IN VLV PLATE
FLOW 3.0±0.25 LBS/HR @ 14.7 PSIA INLET PRESSURE
AND A DELTA P OF 6.7 PSID
ORIFICE DIA: 0.0635 TO 0.0638 INCHES
DISCHARGE COEFF.: (C_d): 0.8
KSC TESTING: 4.37±0.36 LBS/HR
@ 6.7 PSID

(28) RESERVED

(17) IFM HOSES

- LENGTH
  - BLUE/BLUE - 10 FT
  - RED/RED - 10 FT
  - YELLOW/YELLOW - 8 FT
  - MATERIAL - TEFLON
  - DIAMETER - 1/4 IN OD
- FREE FLUID NOZZLE (NOT SHOWN) LENGTH -13 5/8"
- STOWED IN CONTINGENCY HOSE AND CABLE KIT

QD COMPATIBILITY	
-1101	-3102
-1141	-3142
-1201	-3142, -3302
-1301	-3142, -3302

(16) TRASH CAN AND HOSES INSTALLED DURING POST INSERTION AND STOWED DURING DEORBIT PREP

(15) ALLOWS WASTE TANK TO BE SUPPLIED TO FES IN A CONTINGENCY BY CONNECTING WASTE H2O QD TO SUPPLY H2O QD. ALSO ALLOWS DUMP NOZZLES TO BE CROSS-TIED (SEE (17)) AND PERMITS CONTINGENCY WATER CONTAINER (CWC) TO BE USED IN THE EVENT OF A WASTE TANK LEAK

(14) FILTER IS REMOVABLE IN FLIGHT

(13) RESERVED

(12) COMMODE
- VOLUME: 2.5 FT^3
- WEIGHT: 135 LBS
- COLLECTOR AIR OUTLET IS THROUGH A 0.45μ HYDROPHOBIC FILTER WHICH PREVENTS FREE LIQUID FROM EXITING COLLECTOR
- COLLECTOR AIR OUTLET HAS 20 X 20 MESH FILTER WITH .018 IN DIA WIRE, WHICH PREVENTS SOLID WASTE FROM EXITING COLLECTOR

(11) PNL ML86B NOMENCLATURE

OV-105/104	WCS CNTLR (CB19 AND CB22)	5 AMPS
OV-103	CB19 WCS CNTLR/SLINGER	5 AMPS
	CB22 WCS CNTLR	3 AMPS
OV-102	CB19 WCS CNTLR	5 AMPS
	CB22 WCS CNTRL	5 AMPS

(10) THE DOT (".") WAS FORMERLY KNOWN AS "PHS". STILL FUNCTIONAL. SELECTED FAN SEP WILL OPERATE, BUT INTERLOCK WITH COMMODE LINKAGE WILL NOT FUNCTION, AND COMMODE OPS NOT POSSIBLE (SLIDE VLV WILL NOT OPEN). NOTE THAT THOUGH THE POSITION IS STILL FUNCTIONAL, THE "." EMBLEM IS NO LONGER VISIBLE.

(9) 1μ HYDROPHOBIC FILTER PRECLUDES WATER FROM EXITING TANK TO N_2 SUPPLY LINES IN EVENT OF BELLOWS LEAK, BUT WATER WILL BREAK THROUGH THE HYDROPHOBIC FILTER IF THE PRESSURE IS 5 PSID ACROSS IT

(8) DUMP NOZZLE LOCATED ON THE PORT SIDE OF THE VEHICLE
MAX FLOW RATE: 185-195 LB/HR FLUID
1.5-2.0 LB/HR AIR

(7) AN OVAL-SHAPED CAM LOCATED AT THE END OF THE SHAFT TO WHICH THE SWITCH IS ATTACHED CLOSES THE SAME SET OF CONTACTS WHETHER THE SWITCH IS IN THE "WCS/EMU" OR "." POSITION.

(6) SEPARATOR OUTLET CABIN ODOR/BACTERIA FILTER. CAN BE CHANGED IN FLIGHT, BUT ONLY ONE SPARE IS CARRIED ONBOARD

(5) COMMODE REPRESS SCREEN:
SCREEN: 40 MESH, 0.0065 WIRE
LINE DIAMETER ENSURES COMMODE REPRESS IN ~20 SEC
FILTER: 0.45M ABSOLUTE
0.5 INCH DIA I.D. LINE AND VALVE ACT AS A RESTRICTOR

(4) RESTRICTOR INSIDE DIAMETER: 1.03 INCHES
MAX FLOW 30 CFM

3. REFER TO TABLE 6.1 FOR DRAWING REFERENCES

(2) THE A AND B (REDUNDANT) LINE HEATERS ARE CONTINUOUSLY WRAPPED TOGETHER THE FULL LENGTH OF THE LINE FROM X_O = 576

NOTES: (1) WASTE WATER STORAGE TANK
- USABLE CAPACITY: 165 LBS
- LENGTH: 35.5 IN
- DIAMETER: 15.50 IN
- DRY WEIGHT: 39.5 LBS

(30) TIME DELAY CIRCUITRY WILL KEEP FAN SEP RUNNING FOR 30 SEC AFTER MODE SWITCH IS TAKEN OFF.

(29) ELBOW FITTING FROM BAG INSIDE COMPARTMENT IS CONNECTED (FRICTION FIT) TO TYGON TUBING WHICH LEADS TO VAC VENT CONNECTION

(28) VOL F WET TRASH COMPARTMENT LINE FITTING IS AN "AN" (ARMY - NAVY) TYPE

(27) FAN SEP CONFIG IS MISSION DEPENDENT. SEE TABLE Z1.2

*5 WMS

SIGNATURE	DATE	NATIONAL AERONAUTICS AND SPACE ADMINISTRATION LYNDON B. JOHNSON SPACE CENTER HOUSTON, TEXAS
DSGN L. DUMIS	10/18/78	
DR		WASTE MANAGEMENT SYSTEM
ENGR S. TRIPODI		
ENGR	9/9/93	
APP	9/14/93	
APP		SPACE SHUTTLE / DWG NO 6.5
CADS S.K. Kimbell 10-4-93		ALL
LTR E / PCN 3		121 X 34 / PAGE / SHEET 1 OF 1

BASIC REV E-3

T S R Q P O N M L K J

COMMODE CONTROL

TO DEFECATION
ILL UP
IT 20 SEC
PUSH FWD

DOWN

OFF

COMMODE CONTROL HANDLE (CCH) (SEAT SLIDE VALVE)

FWD

WHEN CCH FWD, SLIDE VLV OPENS

CABIN AIR

CABIN AIR RATE: 27 CFM - COMMODE SLIDE VLV OP
16 CFM - COMMODE SLIDE VLV OP WITH SEATED USER

COMPACTOR DRIVE

LION BOX AUX WET TRASH

WET TRASH (VOLF)

CABIN AIR

3 LB AIR/DAY AT 14.7 ATM

V62 P0505A OF1 | N/A
WASTE COLLECTOR PRESSURE
0 TO 2.0 PSIA
1 S/S

27 CFM AIR (MIN)

CCH BACK & DOWN

CCH UP OR FWD

COMMODE CONTROL HANDLE CONTROLS ACTIVATES 4 VALVES AND A S3 MICROSWITCH. COMMODE CONTROL HANDLE NOT OPERABLE IF MODE SWITCH IS IN OFF POSITION OR IN THE "0" POSITION. MODE SWITCH NOT OPERABLE IF COMMODE CONTROL HANDLE IS IN READY TO USE POSITION

22 X 22 MESH FILTER WITH .0075 IN DIA WIRE

7/8" ID

10 CFM AIR FLOW RATE (MINIMUM)

URINE FLOW RATES
0.05 LBS/SEC (NOMINAL)
0.088 LBS/SEC (MAX)

TO REMOVE THE HOSE

TO LOCK HOSE IN PLACE

20 X 20 MESH WITH .016 IN DIA WIRE

20 X 20 MESH WITH .016 IN DIA WIRE

EMU DRAIN

WCS/UMS

UMS

WCS

IF UMS FLOWN

TO UMS CONTROL

TO UMS CONTROL

IF UMS FLOWN

WCS/UMS SWITCH ONLY ON UMS FLIGHTS

30 SEC SHUTDOWN TIME DELAY

WCS/EMU OR "."

WCS/EMU OR "."

MODE

OFF

30 SEC SHUTDOWN TIME DELAY

SEP 1

SEP 2

FAN/SEPARATOR 1

FAN/SEPARATOR 2

THERMAL SW

OPEN 248°F

K1

THERMAL SWITCHES (ONE PER FAN SEP) ARE INTERNAL TO THEIR RESPECTIVE MOTORS

LIQUID

AIR

.343" ID

.475

38 CFM TO CABIN (MIN)

MUFFLER (AT REAR OF WASTE MANAGEMENT COMPARTMENT)

.09 LB/SEC (MAX)

EACH CHECK VLV: CRACK/RESEAT AT 1.0 ± .25 PSI

.09 LB/SEC (MAX)

3 LB/HR AT 14.7 ATM

VACUUM VENT

-1101

PNL WCS TP 126

3 LB AIR/DAY AT 14.7 ATM

AUX WMC WET TRASH

CABIN AIR OUTBOARD (PORTSIDE) OF WCS COMPARTMENT

VALVE CLOSED WHEN CCH FWD

CCH BACK & DOWN OR UP

CCH FWD

CCH BACK & DOWN OR UP

20 X 20 MESH WITH .018 IN DIA WIRE

CAN FLOW

CABIN AIR

TRASH CAN

ALSO CALLED COFFEE CAN

WCS VACUUM VALVE

CLOSE

OPEN

PNL WCS VLV 5.8

.944" ID

MIDDECK ECLSS BAY

(EDO OV-102 AND OV-105 ONLY)

RCRS

6.12-1

1.93" ID

1.93" ID

AIRLOCK VENT

6.3-1

H_2 SEPARATOR OVERBOARD VENT

6.4

.218" ID

H_2 FLOW= ~10 SCCM OR 6 SCIM

LENGTH BETWEEN VACUUM VALVE AND VACUUM VENT ISOL VALVE IS 10 FEET FOR OV-103, 104 (20 FEET FOR OV-102, 105)

MN A VAC VENT ISOL VLV 3A PNL ML86B+B CB67

MN B VAC VENT ISOL VLV 3A PNL ML86B+B CB68

V_{MNA} ML86B

V_{MNB} ML86B

V62 S0205E OF4 | N/A
VAC VENT ISOL VLV-MN A
1=MN A 1 S/S

V62 S0206E OF4 | N/A
VAC VENT ISOL VLV-MN B
1=MN B 1 S/S

V62 X0207E OF4 | N/A
VAC VENT ISOL VLV-OPEN
1=OPEN 1 S/S

V62 X0208E OF4 | N/A
VAC VENT ISOL VLV-CLOSED
1=CLOSED 1 S/S

WASTE H_2O VACUUM VENT ISOL VLV BUS SELECT

MN A

MN B

PNL ML31C S10

WASTE H_2O VACUUM VENT ISOL VLV CONTROL

OP CL

DS7

OPEN

CLOSE

PNL ML31C S11

OPEN

CLOSE

AC 1
WCS FAN SEP 1

ØA 3A PNL MA73C+E CB47

ØB 3A PNL MA73C+E CB48

ØC 3A PNL MA73C+E CB49

$V_{AC1ØA}$

$V_{AC1ØB}$

$V_{AC1ØC}$

GSE FLUSH

ECLS H_2O SYSTEM FWD FUSELAGE

ARS CONDENSATE

6.2

.218" ID

MIDDECK ECLSS BAY

V62 X0533E OF2 | N/A
WASTE TK 1 DUMP ISOL VLV POSITION
1=OPEN 1 S/S

ECLSS BAY

X_0=576

WASTE H_2O DUMP ISOL VLV

OP CL

DS3

OPEN

CLOSE

PNL ML31C S3

MN A WASTE H_2O DUMP ISOL 3A PNL ML86B+B CB17

V_{MNA} ML86B

CL OP

V_{MNB} ML86B

FILTER IS 3-STAGE POLYURETHANE FOAM

TOTAL LENGTH 6.95"

1.0" 1.0" 3.5"

30 PORES PER INCH

45 PORES PER INCH

80 PORES PER INCH

HIGH CAPACITY URINE SOLIDS FILTER NOT REPLACEABLE IN FLIGHT

V62 P0500A OF2 | OF2
WASTE LIQUID PRESSURE
0 TO 40 PSIG
1 S/S
F

V62 X0570E OF1 | N/A
WASTE TK 1 INLET VALVE POSITION
1=OPEN 1 S/S

WASTE H_2O TANK 1 VLV

OP CL

DS2

OPEN

CLOSE

PNL ML31C S2

CL OP

MN A WASTE H_2O TK 1 VALVE 3A PNL ML86B+B CB16

V_{MNA} ML86B

V62 P0540A OF1 | OF1
WASTE WATER TANK QUANTITY
0 TO 100 PCT
1 S/S
F

0.25"

6.4

WASTE TANK 1

V62 X0566E OF2 | N/A
WASTE TK 1 DRAIN VALVE POSITION
1=OPEN 1 S/S

WASTE H_2O TK 1 DRAIN VLV

OP CL

DS1

OPEN

CLOSE

PNL ML31C S1

CL OP

MN B WASTE H_2O TK 1 DRAIN 3A PNL ML86B+B CB73

V_{MNB} ML86B

ECLS H_2O SYSTEM FWD FUSELAGE D-13

GSE DRAIN

B -1301

Y -3102

WCS OUTBOARD VAL

6.4

-1101

WASTE TANK BELLOWS DATA

NEUTRAL POINT= ~ ESS TANK QTY
MAX ΔP ACROSS (GAS TO LIQUID)
-OPERATIONAL= 28 PSID
-STRUCTURAL= 32 PSID
-LIFE CYCLE= 17 PSID
MAX ΔP ACROSS (LIQUID TO GAS)
-OPERATIONAL= 25 PSID
-LIFE CYCLE= 10 PSID

A TANK ISOLATED FROM WATER DEMANDS BY A CHECK/RELIEF VALVE WILL START FLOWING WHEN THE DOWNSTREAM TANK WATER PRESSURE DROPS TO ~1.5 PSI (~25) AND WILL BE AT FULL FLOW AT ~2.0 PSI (~1%) DOWNSTREAM PRESSURE.

A LEAKING BELLOWS WILL CREEP TO ITS ZERO-PRESSURE (NEUTRAL) POSITION.

WATER TANK QUANTITY, PERCENT

100 90 80 70 60 50 40 30 20 10 0

1.0 0.5 0.0 -0.5 -1.0 -1.5 -2.0 -2.5

WATER PRESSURE, PSI

WATER TANK BELLOWS EFFECT ON WATER PRESSURE

6.4.5

TYPICAL FAN SEP PARAMETERS - HIGH TORQUE AND LOW TORQUE MOTORS

NOTE: NUMBERS IN PARENTHESES REPRESENT SPEC VALUES.

	LOW TORQUE	HIGH TORQUE
DRY		
POWER (WATTS)	119 (140)	159 (180)
SPEED (RPM)	5892 (5800-6000)	5927 (5850 - 6000)
START UP TIME (SEC)[1]	11 (16)	4 (8)
START CURRENT (AMPS)	2.1 - 2.3 (3.0)	4.5 - 4.7 (5.15)
RUN CURRENT (AMPS)	0.7 (0.7)	1.9 (2.1)
MIN START TORQUE (IN-OZ)	16 ± 2	30
MIN POWER FACTOR[2]	0.50	0.27
WET		
FLOW (CC/MIN)[3]	2450 ± 50	2450 ± 50
POWER (WATTS)	181 (220)	237 (260)

1. TIME TO REACH NOMINAL OPERATING RPM.

2. POWER FACTOR IS A MEASURE OF A TYPE OF EFFICIENCY FACTOR. A LOW POWER FACTOR MEANS MORE CURRENT AND GREATER I^2R LOSSES IN THE GENERATING AND TRANSMITTING EQUIPMENT.

3. THE FLOW USED IN THIS CHART IS MUCH HIGHER THAN A TYPICAL URINATION AND WAS USED TO DEMONSTRATE WORSE-CASE CONDITIONS. A MORE LIKELY FLOW MEASURES NO HIGHER THAN ABOUT 2000 CC/MIN.

COMMODE CONTROL HANDLE (CCH)

COMMODE CONTROL VALVE ASSEMBLY

BONNET (WITH COVER REMOVED)

OFF

WCS/EMU

INTERLOCK CAM PIN DOUBLE SHEAR DOWEL PIN

COMMODE CONTROL LINKAGE PIN DOUBLE SHEAR DOWEL PIN (88 LB ON CCH TO SHEAR)

ROLL PIN COMPONENT LEVEL STOP PIN. SYSTEM LEVEL STOPS ARE ON THE COMMODE CONTROL HANDLE

CCH LINKAGE SHOWN IN WCS/EMU POSITION

AC 2
WCS FAN SEP 2

ØA 3A PNL MA73C+E CB50

ØB 3A PNL MA73C+E CB51

ØC 3A PNL MA73C+E CB52

$V_{AC2ØA}$

$V_{AC2ØB}$

$V_{AC2ØC}$

BASIC REV E-3

WATER TANK QUANTITY, PERCENT

0 10 20 30 40 50 60 70 80 90 100

1 2 3 4 5 6 7 8

P Q R S T U V

DATE 09/07/93 | NAME VEM | VERSION INA.5

COMPOOL CONTROL VALVE ASSEMBLY
BONNET (WITH COVER REMOVED)
ROLL PIN
COMPONENT LEVEL STOP PIN. SYSTEM LEVEL STOPS ARE ON THE COMPOOL CONTROL HANDLE
CCH/LINKAGE SHOWN IN WCS/EMU POSITION
COMPOOL CONTROL HANDLE (CCH)
INTERLOCK CAM PIN
DOUBLE SHEAR
DOWEL PIN
COMPOOL CONTROL LINKAGE PIN
DOUBLE SHEAR
DOWEL PIN (68 LB ON CCH TO SHEAR)
WCS/EMU
OFF
EMU
WCS
PNL WCS
ON
OFF
SEP 2 BYPASS
SEP 1 BYPASS
AC 2
PNL MA73CKE CB52
PNL MA73CKE CB51
PNL MA73CKE CB50
3A
0C
0B
0A
VAC28C
VAC28B
VAC28A
M
THERMAL SW
OPEN
240°F
K2
FAN/SEPARATOR 2
FAN/SEPARATOR 1
LIQUID
AIR
SEP 2
SEP 1
4SJ
HUFFLER (AT REAR OF WASTE MANAGEMENT COMPARTMENT)
38 CFM TO CABIN CP
THERMAL SWITCHES ONE PER FAN SEP ARE INTERNAL TO THEIR RESPECTIVE MOTORS
CCH BACK & DOWN OR UP
CCH FWD
CCH UP OR FWD
VALVE CLOSED WHEN CCH FWD
CCH BACK & DOWN
27 CFM AIR (MIN)
COMPACTOR DRIVE
VACUUM VENT
3 LB/HR AT 14.7 ATM
3 LB AIR/GAW AT 14.7 ATM
LION BOX AUX WET TM
VAC
PO5054
PRESSURE
0 TO 2.0 PSIA
1 S/S
WASTE COLLECTOR
OFF
N/A
P
CABIN AIR RATE 27 CFM - COMPOOL SLIDE VLV OP
16 CFM - COMPOOL SLIDE VLV OP WITH SEATED USER
CABIN AIR
WHEN CCH FWD SLIDE VLV OPENS
COMPOOL CONTROL HANDLE (CCH) (SEAT SLIDE VALVE)
PRIOR TO DEFECATION
1. PULL UP
2. WAIT 20 SEC
3. PUSH FWD
READY TO USE
COMPOOL CONTROL
NOMOO
OFF
PNL WCS
MODE
WCS/EMU OR ...
30 SEC SHUTDOWN TIME DELAY
PECHANICAL LINKAGE
COMPOOL CONTROLS ACTIVATES 4 VALVES AND A S3 MICROSWITCH. COMPOOL CONTROL HANDLE NOT OPERABLE IF MODE SWITCH IS IN OFF POSITION OR IN THE "P" POSITION, MODE SWITCH NOT OPERABLE IF COMPOOL CONTROL HANDLE IS IN READY TO USE POSITION
PNL WCS
FAN
SEP
1
2
COLLECTOR PRESSURE XDCR
NOTE: CB RATING AND NOMENCLATURE ARE VEHICLE DEPENDENT. SEE
PNL ML868B CB19
PNL ML868B CB02
WCS CNTLR
5A
3A
PWA ML868
PWB
PWA
PWB
PWA
PWB
AIR FLOW RATE 10 CFM (MINIMUM)
UBLINE FLOW RATES 0.05 LBS/SEC (NOMINAL) 0.088 LBS/SEC (MAX)
7/8" ID
22 X 22 MESH FILTER WITH .0075 IN DIA WIRE
20 X 20 MESH WITH .016 IN DIA WIRE
TO REMOVE THE HOSE
TO LOCK HOSE IN PLACE
EMU DRAIN
WCS/UMS
UMS
PNL WCS
IF UMS FLOWN
TO UMS CONTROL
WCS/UMS SWITCH ONLY ON UMS FLIGHTS
SEP 1 BYPASS
SEP 2 BYPASS
SHUTDOWN TIME DELAY

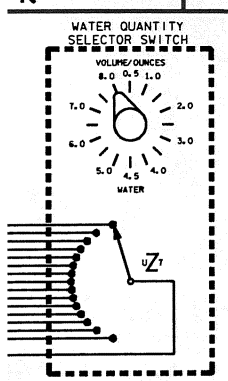

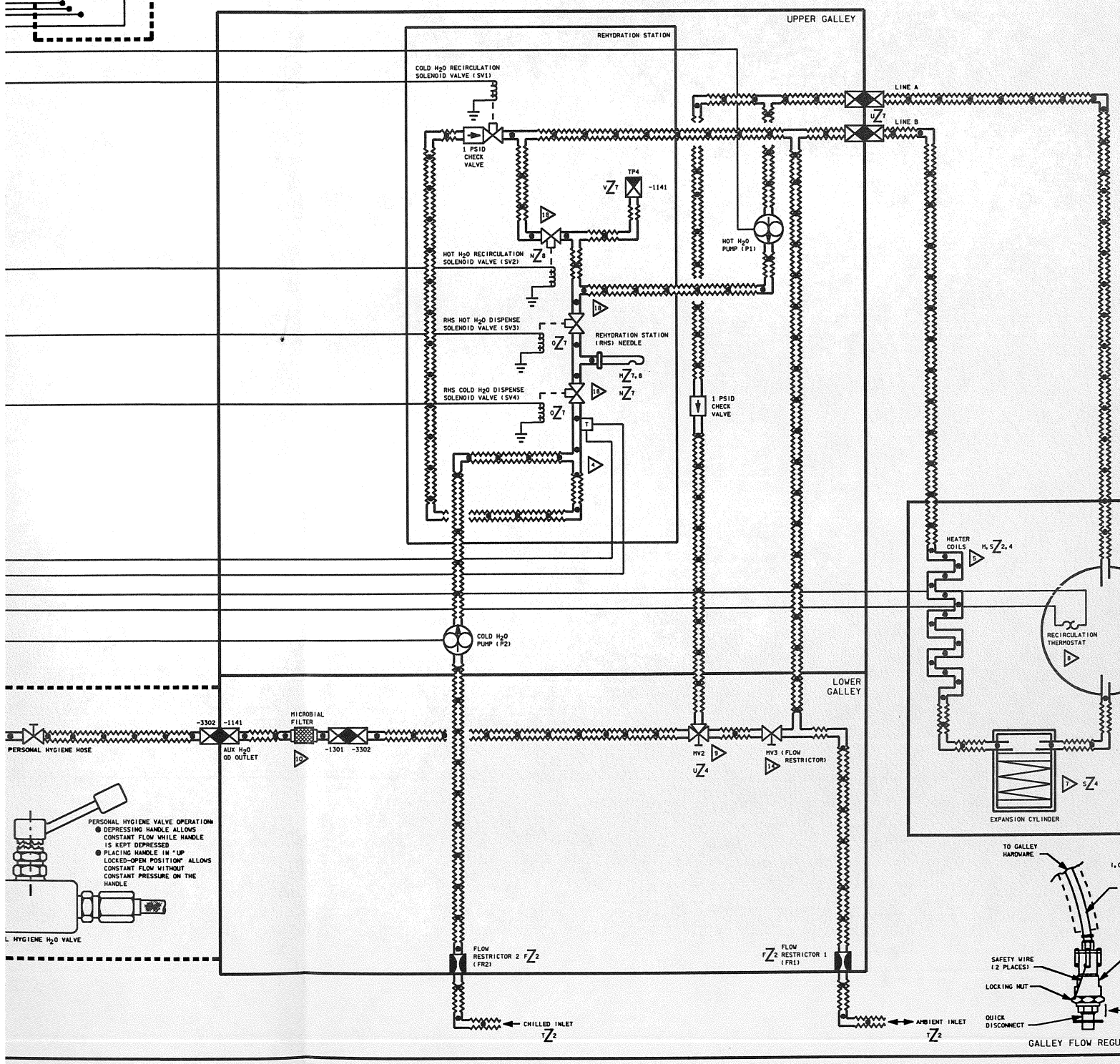

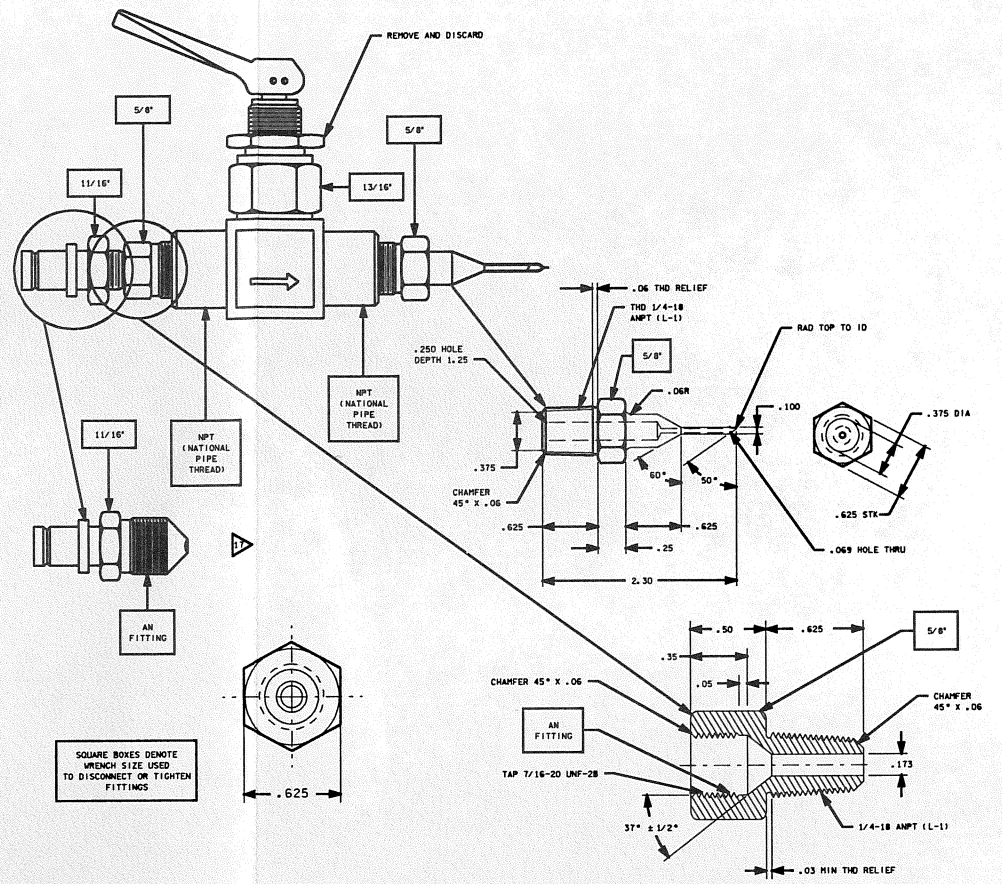

CONTINGENCY WATER DISPENSER (CWD)

CEA DISPENSE/RECIRC LOGIC:

POWER ON INITIAL RECIRC.....40 SECONDS
(WHEN OVEN/RHS-ON, SOAK GOES THROUGH INITIALIZATION PROCESS. BOTH HOT AND COLD WATER PUMPS CIRCULATE AND THE RHS DISPENSE IS INHIBITED)

COLD RECIRC:

IF COLD THERMOSTAT TEMP EXCEEDS 60 DEG F, THE COLD WATER PUMP CIRCULATES:
COLD RECIRCULATION.....10 SECONDS (MIN)

IF TEMP EXCEEDS 55 DEG F, THE PUMP CIRCULATES ANOTHER 10 SEC:
COLD RECIRCULATION.....20 SECONDS (INITIAL 10 SEC + ANOTHER 10 SEC)

IF TEMP STILL EXCEEDS 55 DEG F, THE PUMP IS INHIBITED FOR 5 MINUTES
COLD TIME OUT..... 5 MINUTES (MAX). WHEN COLD TEMP REACHES 60 DEG F, COLD RECIRC PROCESS STARTS AGAIN

HOT RECIRC:

THE HOT WATER CIRCULATION STARTS WHEN TEMP DROPS BELOW 145 DEG F AND STOPS WHEN TEMP EXCEEDS 165 DEG F

DISPENSE PROCESS:

1. DISPENSE AMOUNT IS SELECTED (0.5 TO 8 OUNCES)
2. BEVERAGE OR FOOD CONTAINER IS PLACED IN THE RHS
3. DEPRESS EITHER THE BLUE (COLD) OR YELLOW (HOT) PUSH - BUTTON
4. THE LINE IS THEN PURGED OF STANDING WATER - THE RECIRC VALVE IS OPENED AND THE COLD OR HOT WATER RECIRC PUMP OPERATES FOR 3 SECONDS. DISPENSE IS INH DURING THIS TIME
5. THE RECIRC VALVE CLOSES AND THE DISPENSE VALVE OPENS. WHEN DISPENSE IS COMPLETE, SELECTED BUTTON FLASHES

REHYDRATION STATION DISPENSE TIMES

QUANTITY (OUNCES)	COLD TIME (SECONDS)	HOT TIME (SECONDS)
0.5	0.92	0.86
1.0	2.06	1.83
1.5	3.08	3.04
2.0	4.06	4.41
2.5	5.11	5.79
3.0	6.13	7.17
3.5	7.14	8.55
4.0	8.16	9.92
4.5	9.18	11.30
5.0	10.20	12.68
5.5	11.22	14.06
6.0	12.24	15.43
6.5	13.25	16.81
7.0	14.27	18.19
7.5	15.29	19.56
8.0	16.31	20.94

DATE:	NAME:	VERSION:
DATE: 07/07/94	NAME: BJB	VERSION: BPT.8
DATE: 07/11/94	NAME: JMB	VERSION: BPT.9
DATE: 07/18/94	NAME: JMB	VERSION: INK.8

△12 TWO FIRE PORTS EXIST ON THE REPACKAGED GALLEY - ONE JUST BELOW THE MV2 VALVE AND ONE ON THE LEFT CORNER OF THE TOP FACE (SEE DRAWING LOCATIONS T3 AND P8

△13 THE TWO HINGES AND THE LATCH PIN ALLOW THE REPACKAGED GALLEY TO BE TILTED OUTWARD 45 DEGREES ON THE BOTTOM HINGES

△14 TEST CONNECTORS ARE USED BY GROUND SUPPORT TO CHECK THE OPEN/CLOSE OPERATION OF HEATER THERMOSTATS

△15 MICROBIAL FILTER® RESIN IMPREGNATED WITH TRIIODIDE (I_3) TO INHIBIT BACTERIAL GROWTH/REPRODUCTION. ALSO KNOWN AS THE MICROBIAL CHECK VALVE (MCV) BUT THIS IS A MISNOMER BECAUSE IT IS NOT A WATER CHECK VALVE

△16 OPENING THE MV2 VALVE ALLOWS HOT WATER TO MIX WITH THE AMBIENT TEMPERATURE WATER BEING SUPPLIED TO THE AUX H_2O QD OUTLET (AUXILIARY PORT)

△17 WHEN THE HOT WATER TEMPERATURE AT THE HOT WATER RECIRCULATION THERMOSTAT DROPS BELOW 145±5°F, THE CONTROL ELECTRONICS ASSEMBLY OPENS THE HOT H_2O RECIRCULATION SOLENOID VALVE (SV2) AND STARTS THE HOT H_2O PUMP (P1) TO RECIRCULATE HOT WATER . THE RECIRCULATION PATH RUNS FROM THE HOT WATER TANK THROUGH P1, SV2, AND THE HEATING COIL AND BACK TO THE HOT WATER TANK. WHEN THE RECIRCULATION THERMOSTAT TEMPERATURE REACHES 165±5°F, THE CEA STOPS THE RECIRCULATION PROCESS. TO KEEP THE WATER IN THE HOT WATER TANK HOT, IT MUST BE RECIRCULATED PERIODICALLY BECAUSE THE WATER IS HEATED IN THE LINE WHICH FEEDS THE TANK RATHER THAN IN THE TANK ITSELF

△18 THE EXPANSION CYLINDER PROVIDES A VOLUME FOR HOT WATER EXPANSION FROM THE HOT WATER TANK IN THE EVENT THAT THE TANK IS OVERHEATED. THIS CYLINDER REPLACES THE FUNCTION OF THE OLD MV3 VALVE ON THE OLD GALLEY. PREVIOUSLY, IF THE WATER TANK WAS OVERHEATED WATER WOULD EXPAND AND FLOW BACK THROUGH THE AMBIENT INLET AND INTO THE SH2O SYSTEM. THE MAXIMUM VOLUME OF THE EXPANSION CYLINDER IS 7.5 CU. IN. OR ABOUT 1/2 A CUP.

THE PREVIOUS VERSION OF THE GALLEY HAD AN MV4 VALVE THAT ALLOWED FOR BLEEDOUT OF AIR DURING GROUND SERVICING. THIS VALVE WHICH HAS BECOME OBSOLETE, HAS BEEN REMOVED ON THE REPACKAGED GALLEY

△19 WATER TANK CAPACITY IS 12 LBM. THE WATER TANK IS LOCATED OUTSIDE THE REPACKAGED GALLEY ON THE PORT SIDE. INSULATION ENCLOSES THE BOTTOM AND CIRCUMFERENCE OF THE WATER TANK/COIL ASSEMBLY. THE EXTERNAL DIMENSIONS OF THE WATER TANK ARE 12 INCHES IN DIAMETER AND 5.2 INCHES IN LENGTH

△20 AMBIENT TEMPERATURE WATER ENTERS A HEATER COIL ASSEMBLY CONSISTING OF THREE 12.66 INCH DIAMTER COILS OF STAINLESS STEEL TUBING. EACH COIL HAS 2 STRIP HEATERS BONDED ON THE OUTSIDE OF THE TUBE SURFACE. A SMALL AIRSPACE EXISTS BETWEEN EACH COIL AND THE WATER TANK. HEATER COIL SETS EXTEND ABOUT 1/3 OF THE CIRCUMFERENCE OF THE TANK

△21 WHEN THE COLD WATER TEMPERATURE SENSED BY THE RESISTANCE TEMPERATURE DETECTOR (RTD) EXCEEDS 60°F, THE CONTROL ELECTRONICS ASSEMBLY (CEA) OPENS THE COLD H_2O RECIRCULATION SOLENOID VALVE (SV1) AND STARTS THE COLD H_2O PUMP (P2) TO RECIRCULATE COLD WATER FOR A MINIMUM OF 10 SECONDS. IF, AFTER 10 SECONDS OF RECIRCULATION, THE TEMPERATURE AT THE RTD IS BELOW 55°F, THEN THE CEA WILL TERMINATE RECIRCULATION. THE RECIRCULATION PATH RUNS FROM THE WATER CHILLER THROUGH P2 AND SV1 AND RETURNS TO THE SUPPLY WATER SYSTEM THROUGH THE AMBIENT WATER INLET. IF THE WATER IN THE WATER CHILLER IS ABOVE THE RTD RESET POINT OF 55°F, DUE TO HIGHER THAN NORMAL ARS H_2O COOLANT LOOP TEMPERATURES FOR EXAMPLE, THE CEA WILL INHIBIT THE RECIRCULATION PROCESS AFTER 20 SECONDS. THE CEA RECIRCULATION INHIBIT LASTS FOR FIVE MINUTES. AFTER WHICH TIME THE CEA WILL REINITIATE RECIRCULATION IF AND WHEN THE RTD TEMPERATURE EXCEEDS 60°F. COLD WATER RECIRCULATION WAS IMPLEMENTED TO INSURE THAT THE COLDEST AVAILABLE WATER WAS IMMEDIATELY AVAILABLE AT THE REHYDRATION STATION. THIS TIMED COLD WATER RECIRCULATION PROCESS IS DESIGNED TO PREVENT CONTINUOUS COLD WATER RECIRCULATION IN THE EVENT THE WATER CHILLER TEMPERATURE IS ABOVE THE RESET POINT

△22 DEPRESSION OF THE BLUE COLD WATER PUSHBUTTON ALLOWS DISPENSING OF COLD WATER FROM THE WATER CHILLER. THE BLUE COLD PUSHBUTTON WILL ILLUMINATE WHEN ACTUATED. WHEN SELECTED VOLUME OF WATER HAS BEEN DISPENSED, THE PUSHBUTTON WILL BEGIN TO FLASH ON AND OFF. THE LIGHT WILL EXTINGUISH WHEN THE REHYDRATION STATION (RHS) PACKAGE SWITCH IS OPENED BY RETRACTING THE FOOD/DRINK PACKAGE. THE SPECIFIC FUNCTIONS THAT OCCUR WHEN THE COLD PUSHBUTTON IS DEPRESSED ARE:

- THE CONTROL ELECTRONICS ASSEMBLY (CEA) OPENS COLD H_2O RECIRCULATION SOLENOID VALVE (SV1) AND STARTS COLD H_2O PUMP (P2). COLD WATER IS RECIRCULATED FOR THREE SECONDS TO PURGE THE LINE
- WHEN THREE SECONDS ARE UP, THE CEA CLOSES SV1 AND OPENS COLD H_2O DISPENSE SOLENOID VALVE (SV4) TO DISPENSE THE SELECTED QUANTITY
- WHEN DISPENSE OF THE SELECTED QUANTITY IS COMPLETE, THE CEA CLOSES SV4 AND STOPS PUMP P2. QUANTITY DISPENSED IS A FUNCTION OF TIME AND IS CONTROLLED BY A TIMER IN THE CEA

△23 DEPRESSION OF THE YELLOW HOT WATER PUSHBUTTON ALLOWS DISPENSING OF HOT WATER FROM THE HOT WATER TANK. THE YELLOW HOT WATER PUSHBUTTON WILL ILLUMINATE WHEN ACTUATED. WHEN SELECTED VOLUME OF WATER HAS BEEN DISPENSED, THE PUSHBUTTON WILL BEGIN TO FLASH ON AND OFF. THE LIGHT WILL EXTINGUISH WHEN THE REHYDRATION STATION (RHS) PACKAGE SWITCH IS OPENED BY RETRACTING THE FOOD/DRINK PACKAGE. THE SPECIFIC FUNCTIONS THAT OCCUR WHEN THE HOT PUSHBUTTON IS DEPRESSED ARE:

- THE CONTROL ELECTRONICS ASSEMBLY (CEA) OPENS HOT H_2O RECIRCULATION SOLENOID VALVE (SV2) AND STARTS HOT H_2O PUMP (P1). HOT WATER IS RECIRCULATED FOR THREE SECONDS TO PURGE THE LINE
- WHEN THREE SECONDS ARE UP, THE CEA CLOSES SV2 AND OPENS THE RHS HOT H_2O DISPENSE SOLENOID VALVE (SV3) TO DISPENSE THE SELECTED QUANTITY
- WHEN DISPENSE OF THE SELECTED QUANTITY IS COMPLETE, THE CEA CLOSES SV3 AND STOPS PUMP P1. QUANTITY DISPENSED IS A FUNCTION OF TIME AND IS CONTROLLED BY A TIMER IN THE CEA

△24 LABORATORY TESTING HAS SHOWN THAT THE HOT WATER SOLENOID VALVE COULD POTENTIALLY BACKFLOW AIR INTO THE GALLEY LINES AT A DELTA PRESSURE OF 3.525 PSID. LIKEWISE, THE COLD WATER SOLENOID COULD DO THE SAME AT A DELTA PRESSURE OF 4.775 PSID. THIS DELTA EQUATES TO THE DIFFERENCE IN PRESSURE SEEN AT THE RHS NEEDLE AND POTABLE H2O TANK A SUPPLY PRESSURE. AIR COULD BE DRAWN IN WHEN THIS DELTA IS EXCEEDED

△25 CONTINGENCY WATER DISPENSER (CWD) IS CONNECTED TO EITHER THE AMBIENT OR CHILLED QD'S ON MLW36 VIA THE IFM RED-RED HOSE. CWD IS LOCATED IN THE IFM CONTINGENCY HOSE AND CABLE KIT, AND IS USED IN THE EVENT THAT DISPENSE OF POTABLE WATER THROUGH THE RHS IS NO LONGER POSSIBLE OR DESIRED

△26 BOTH WATER HEATER SWITCHES MUST BE IN THE "ON" POSITION TO RECEIVE A TELEMETERED "POTABLE HOT H_2O HEATER - ON" INDICATION

△27 THE WATER HEATER SWITCHES AND THE OVEN/RHS SWITCH ARE SENSED CIRCUIT BREAKER TOGGLE SWITCHES. WHEN A TOGGLE IS IN AN "ON" POSITION AND CURRENT EXCEEDS 10 AMPS, THE BREAKERS WILL OPEN AND THE TOGGLE WILL MOVE TO THE "OFF" POSITION. IF ONE OF THESE CIRCUIT BREAKERS DETERIORATES AND OPENS WHILE THE TOGGLE IS IN THE "ON" POSITION, THE OTHER BREAKER WILL OPEN AND THE TOGGLE WILL GO TO THE "OFF" POSITION. NOTED DURING NOMINAL OPERATIONS. A CLOSED SWITCH COULD BE AN INDICATION OF A CURRENT SPIKE

△28 MV3 ON THE REPACKAGED GALLEY HAD A DIFFERENT LOCATION AND FUNCTION THAN THE OLD MV3 ON THE GALLEY. THE REPACKAGED GALLEY MV3 ACTS ONLY AS A FLOW RESTRICTOR TO THE AMBIENT FEED INTO HV2 AND IS ALWAYS OPEN. THIS VALVE IS INTERNAL TO THE REPACKAGED GALLEY

NOTES:

△1 THE REHYDRATION STATION (RHS) PACKAGE SWITCH SERVES AS AN INTERLOCK SWITCH WHICH MUST BE CLOSED BEFORE THE RHS WATER DISPENSING SYSTEM WORKS. THIS IS ACHIEVED BY INSERTING AND PUSHING IN A FOOD/DRINK PACKAGE TO DEPRESS THE SWITCH TO THE CLOSED POSITION. ONCE WATER HAS BEEN DISPENSED, THE SWITCH MUST BE OPENED AND THEN CLOSED AGAIN BEFORE MORE WATER CAN BE DISPENSED. WHILE THE RHS PACKAGE SWITCH IS DEPRESSED, RECIRCULATION IS INHIBITED WITH ONE EXCEPTION. SWITCHING OVEN/RHS-ON, ACTIVATES AN INITIALIZATION PROCESS WHERE BOTH HOT AND COLD H_2O RECIRCULATE FOR 40 SECONDS. DURING WHICH TIME REHYDRATION STATION (RHS) DISPENSE IS INHIBITED. HAVING THE RHS PACKAGE SWITCH DEPRESSED WILL NOT INHIBIT THIS INITIALIZATION RECIRCULATION PROCESS

*6 RPGD GLY

SIGNATURE		DATE	NATIONAL AERONAUTICS AND SPACE ADMINISTRATION LYNDON B. JOHNSON SPACE CENTER HOUSTON, TEXAS
DSGN	M. MURPHY	5/4/94	
DR	B. TEDDER JR.		
ENGR	S. TRIPODI		REPACKAGED GALLEY
ENGR	[signature]	7/20/94	
APP	[signature]	7/20/94	
APP			SPACE SHUTTLE / DWG NO 6.6
CADS	S.K. Kimbrew	7-21-94	ALL
LTR	E	PCN 4	126.5 X 34 / PAGE / SHEET 1 OF 1

BASIC REV E-4

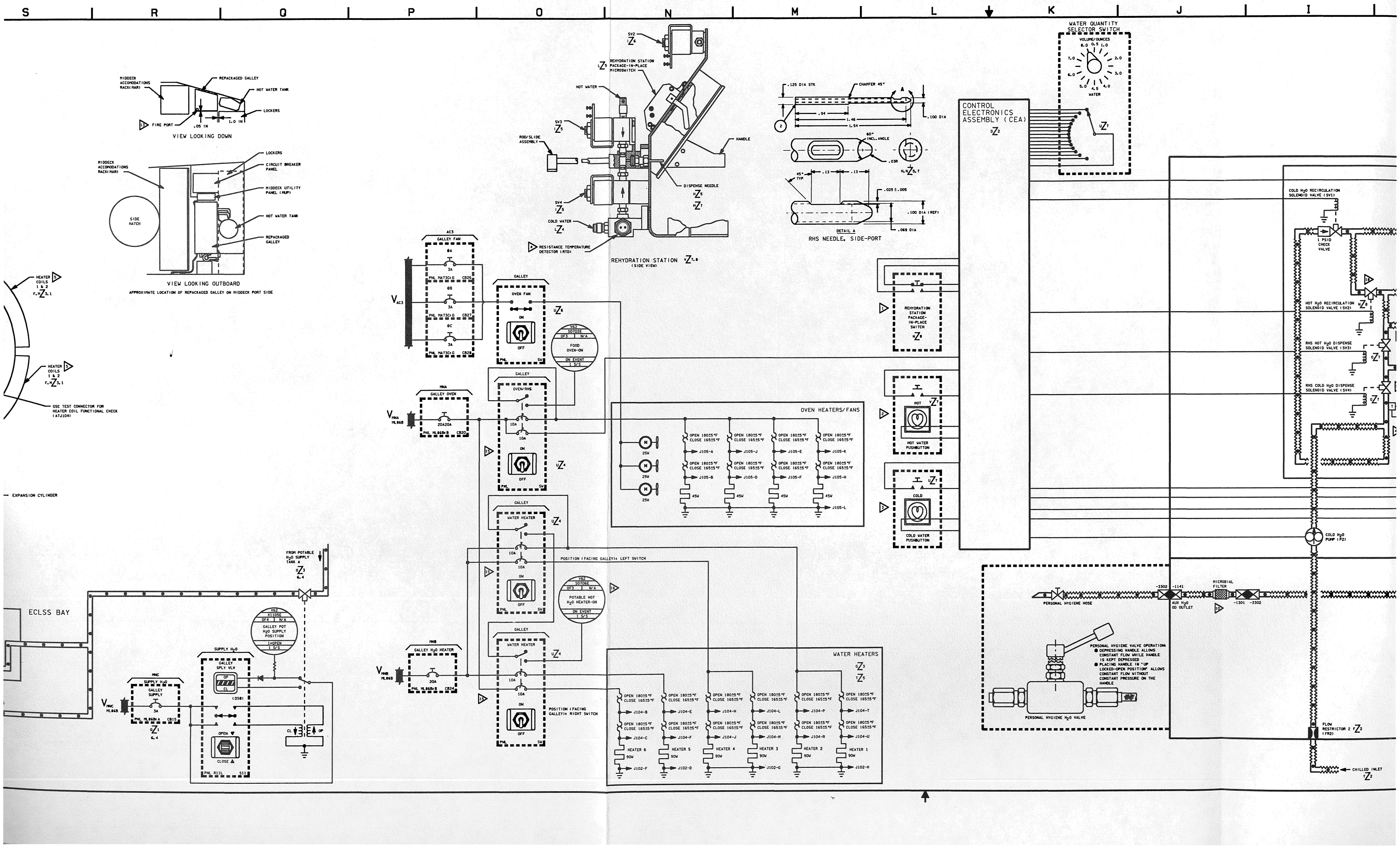

S
R
Q
P
O
N
M
L
K
J
I
MIDDECK ACCOMODATIONS RACK(MAR)
REPACKAGED GALLEY
HOT WATER TANK
LOCKERS
FIRE PORT
.05 IN
1.0 IN
VIEW LOOKING DOWN
MIDDECK ACCOMODATIONS RACK(MAR)
LOCKERS
CIRCUIT BREAKER PANEL
MIDDECK UTILITY PANEL (MUP)
SIDE HATCH
HOT WATER TANK
REPACKAGED GALLEY
VIEW LOOKING OUTBOARD
APPROXIMATE LOCATION OF REPACKAGED GALLEY ON MIDDECK PORT SIDE
HEATER COILS 1 & 2
GSE TEST CONNECTOR FOR HEATER COIL FUNCTIONAL CHECK (ATJ104)
EXPANSION CYLINDER
ECLSS BAY
FROM POTABLE H2O SUPPLY TANK A
GALLEY POT H2O SUPPLY POSITION
SUPPLY H2O
GALLEY SPLY VLV
GALLEY SUPPLY
SUPPLY H2O
REHYDRATION STATION PACKAGE-IN-PLACE MICROSWITCH
HOT WATER
ROD/SLIDE ASSEMBLY
HANDLE
DISPENSE NEEDLE
COLD WATER
RESISTANCE TEMPERATURE DETECTOR (RTD)
REHYDRATION STATION (SIDE VIEW)
.125 DIA STK
CHAMFER 45°
.100 DIA
60° INCL. ANGLE
.03R
45° TYP
.025 ± .005
.100 DIA (REF)
.069 DIA
DETAIL A
RHS NEEDLE, SIDE-PORT
WATER QUANTITY SELECTOR SWITCH
VOLUME/OUNCES
WATER
CONTROL ELECTRONICS ASSEMBLY (CEA)
AC3
GALLEY FAN
GALLEY
OVEN FAN
FOOD OVEN-ON
ON EVENT 1 S/S
MNA
GALLEY OVEN
OVEN/RHS
OVEN HEATERS/FANS
OPEN 180±5°F CLOSE 165±5°F
J105-A
J105-B
J105-J
J105-D
J105-E
J105-F
J105-K
J105-H
J105-L
25W
45W
WATER HEATER
POSITION (FACING GALLEY): LEFT SWITCH
POTABLE HOT H2O HEATER-ON
POSITION (FACING GALLEY): RIGHT SWITCH
MNB
GALLEY H2O HEATER
WATER HEATERS
HEATER 6
HEATER 5
HEATER 4
HEATER 3
HEATER 2
HEATER 1
90W
J102-F
J102-D
J102-G
J102-H
REHYDRATION STATION PACKAGE-IN-PLACE SWITCH
HOT
HOT WATER PUSHBUTTON
COLD
COLD WATER PUSHBUTTON
COLD H2O RECIRCULATION SOLENOID VALVE (SV1)
1 PSID CHECK VALVE
HOT H2O RECIRCULATION SOLENOID VALVE (SV2)
RHS HOT H2O DISPENSE SOLENOID VALVE (SV3)
RHS COLD H2O DISPENSE SOLENOID VALVE (SV4)
COLD H2O PUMP (P2)
PERSONAL HYGIENE HOSE
AUX H2O OD OUTLET
MICROBIAL FILTER
PERSONAL HYGIENE VALVE OPERATION:
● DEPRESSING HANDLE ALLOWS CONSTANT FLOW WHILE HANDLE IS KEPT DEPRESSED
● PLACING HANDLE IN "UP LOCKED-OPEN POSITION" ALLOWS CONSTANT FLOW WITHOUT CONSTANT PRESSURE ON THE HANDLE
PERSONAL HYGIENE H2O VALVE
FLOW RESTRICTOR 2 (FR2)
CHILLED INLET

DATE: 07/18/94 | NAME: JMB | VERSION: INK-8

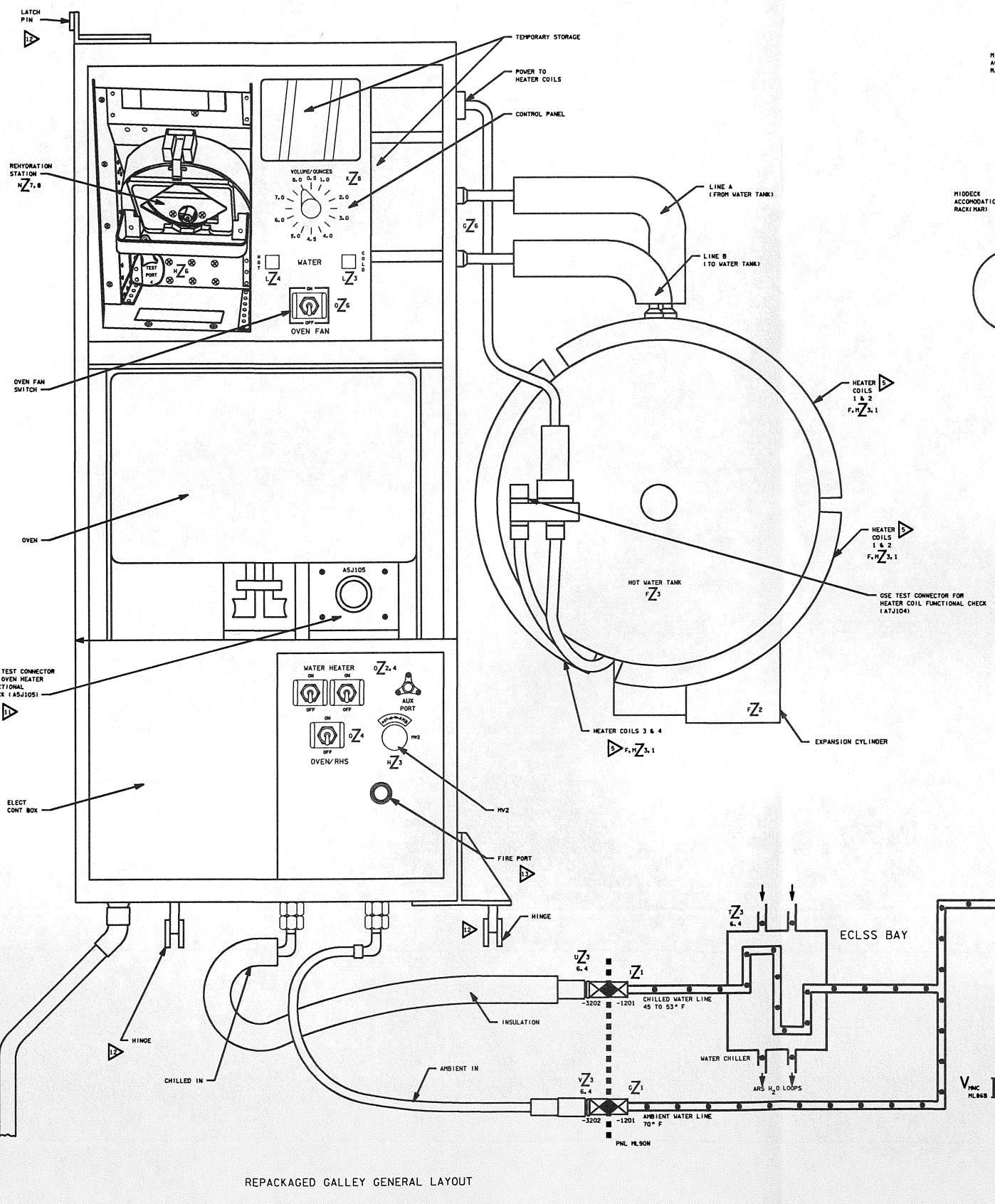

REPACKAGED GALLEY GENERAL LAYOUT

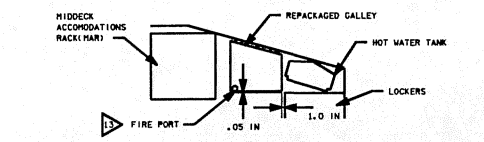

VIEW LOOKING DOWN

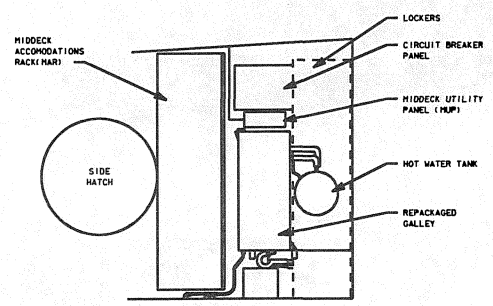

VIEW LOOKING OUTBOARD

APPROXIMATE LOCATION OF REPACKAGED GALLEY ON MIDDECK PORT SIDE

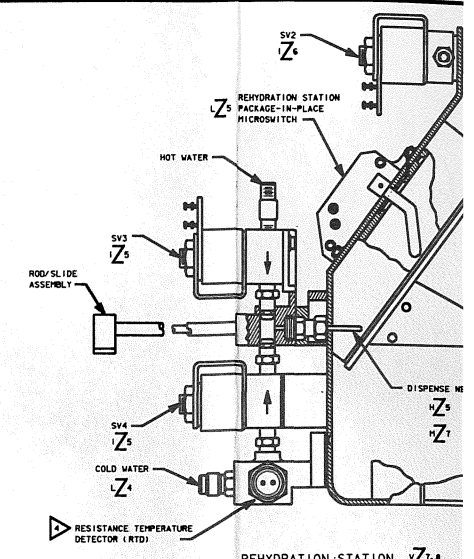

REHYDRATION STATION (SIDE VIEW)

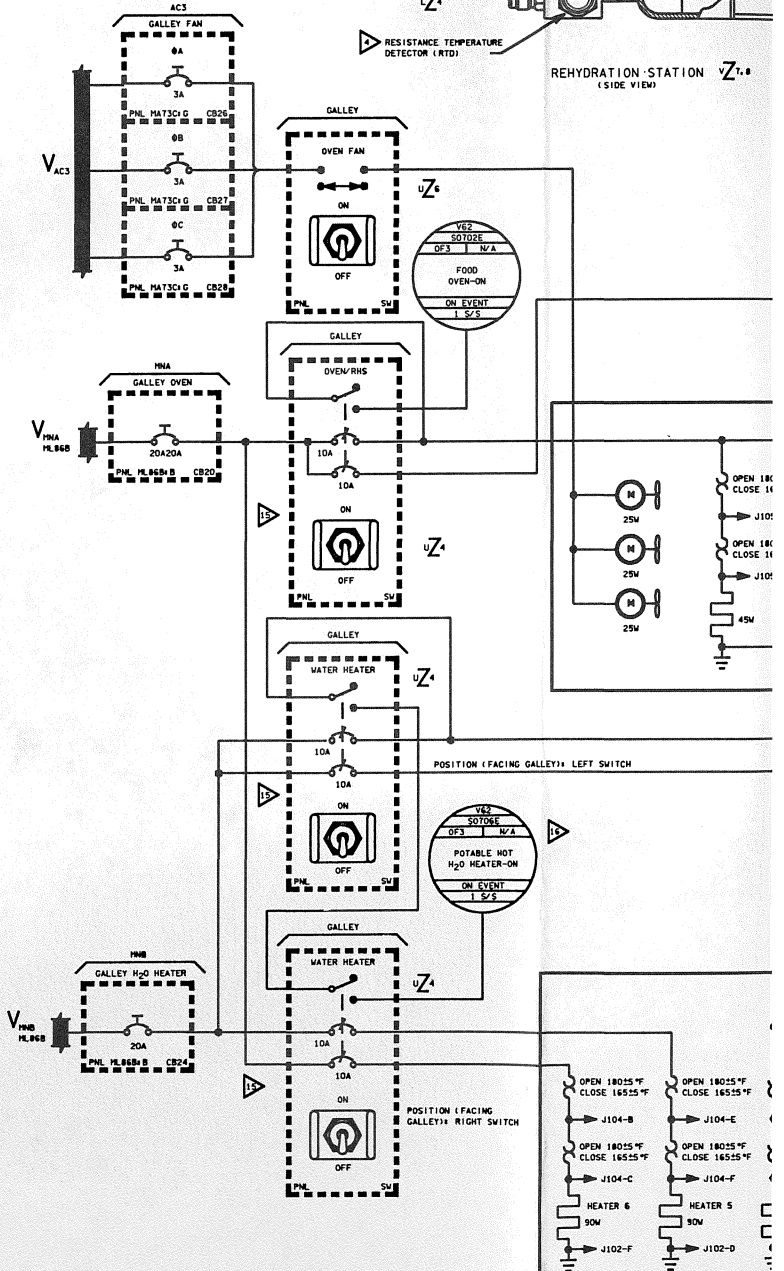

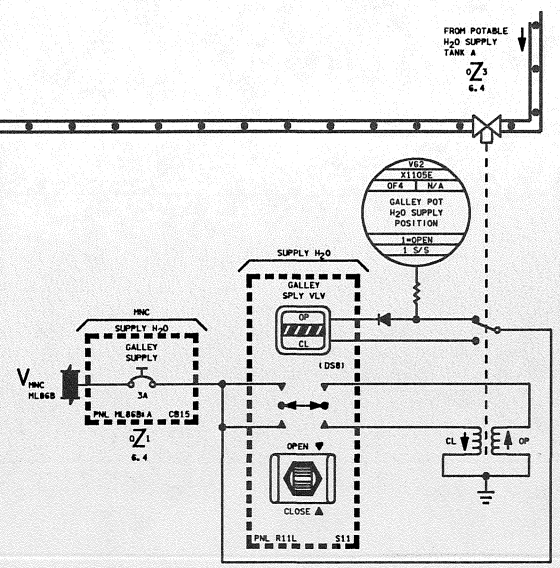

BASIC REV E-4

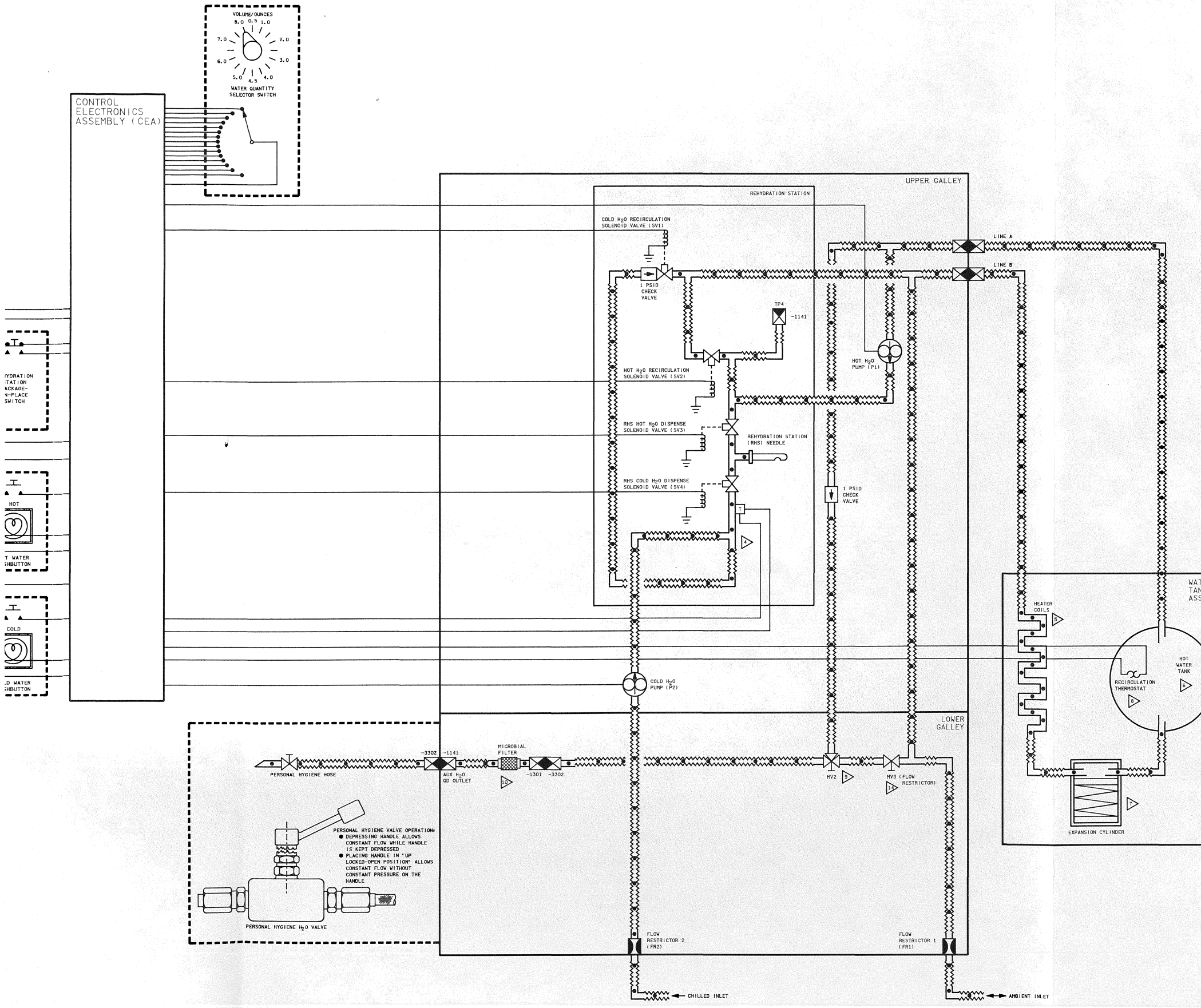

DATE: 06/04/92	NAME: VEM	VERSION: BPT.6
DATE: 06/11/92	NAME: VEM	VERSION: INK.1
DATE: 11/23/92	NAME: VSH	VERSION: INK.2

13. TWO FIRE PORTS EXIST ON THE REPACKAGED GALLEY - ONE JUST BELOW THE MV2 VALVE AND ONE ON THE LEFT CORNER OF THE TOP FACE (SEE DRAWING LOCATIONS T3 AND P8
12. THE TWO HINGES AND THE LATCH PIN ALLOW THE REPACKAGED GALLEY TO BE TILTED OUTWARD 45 DEGREES ON THE BOTTOM HINGES
11. TEST CONNECTORS ARE USED BY GROUND SUPPORT TO CHECK THE OPEN/CLOSE OPERATION OF HEATER THERMOSTATS
10. MICROBIAL FILTER: RESIN IMPREGNATED WITH TRIIODIDE (I_3) TO INHIBIT BACTERIAL GROWTH/REPRODUCTION. ALSO KNOWN AS THE MICROBIAL CHECK VALVE (MCV) BUT THIS IS A MISNOMER BECAUSE IT IS NOT A WATER CHECK VALVE
9. OPENING THE MV2 VALVE ALLOWS HOT WATER TO MIX WITH THE AMBIENT TEMPERATURE WATER BEING SUPPLIED TO THE AUX H_2O GO OUTLET (AUXILIARY PORT)
8. WHEN THE HOT WATER TEMPERATURE AT THE HOT WATER RECIRCULATION THERMOSTAT DROPS BELOW 145.5°F, THE CONTROL ELECTRONICS ASSEMBLY OPENS THE HOT H_2O RECIRCULATION SOLENOID VALVE (SV2) AND STARTS THE HOT H_2O PUMP (P1) TO RECIRCULATE HOT WATER . THE RECIRCULATION PATH RUNS FROM THE HOT WATER TANK THROUGH P1, SV2, AND THE HEATING COIL AND BACK TO THE HOT WATER TANK. WHEN THE RECIRCULATION THERMOSTAT TEMPERATURE REACHES 165.5°F, THE CEA STOPS THE RECIRCULATION PROCESS. TO KEEP THE WATER IN THE HOT WATER TANK HOT, IT MUST BE RECIRCULATED PERIODICALLY BECAUSE THE WATER IS HEATED IN THE LINE WHICH FEEDS THE TANK RATHER THAN IN THE TANK ITSELF
7. THE EXPANSION CYLINDER PROVIDES A VOLUME FOR HOT WATER EXPANSION FROM THE HOT WATER TANK IN THE EVENT THAT THE TANK IS OVERHEATED. THIS CYLINDER REPLACES THE FUNCTION OF THE OLD MV3 VALVE ON THE OLD GALLEY. PREVIOUSLY, IF THE WATER TANK WAS OVERHEATED WATER WOULD EXPAND AND FLOW BACK THROUGH THE AMBIENT INLET AND INTO THE SHDD SYSTEM. THE MAXIMUM VOLUME OF THE EXPANSION CYLINDER IS 7.5 CU. IN. OR ABOUT 1/2 A CUP

   THE PREVIOUS VERSION OF THE GALLEY HAD AN MV4 VALVE THAT ALLOWED FOR BLEEDOUT OF AIR DURING GROUND SERVICING. THIS VALVE WHICH HAS BECOME OBSOLETE HAS BEEN REMOVED ON THE REPACKAGED GALLEY
6. WATER TANK CAPACITY IS 12 LBM. THE WATER TANK IS LOCATED OUTSIDE THE REPACKAGED GALLEY ON THE PORT SIDE. INSULATION ENCLOSES THE BOTTOM AND CIRCUMFERENCE OF THE WATER TANK/COIL ASSEMBLY. THE EXTERNAL DIMENSIONS OF THE WATER TANK ARE 12 INCHES IN DIAMETER AND 5.2 INCHES IN LENGTH
5. AMBIENT TEMPERATURE WATER ENTERS A HEATER COIL ASSEMBLY CONSISTING OF THREE 12.66 INCH DIAMTER COILS OF STAINLESS STEEL TUBING. EACH COIL HAS 2 STRIP HEATERS BONDED ON THE OUTSIDE OF THE TUBE SURFACE. A SMALL AIRSPACE EXISTS BETWEEN EACH COIL AND THE WATER TANK. HEATER COIL SETS EXTEND ABOUT 1/3 OF THE CIRCUMFERENCE OF THE TANK
4. WHEN THE COLD WATER TEMPERATURE SENSED BY THE RESISTANCE TEMPERATURE DETECTOR (RTD) EXCEEDS 60°F, THE CONTROL ELECTRONICS ASSEMBLY (CEA) OPENS THE COLD H_2O RECIRCULATION SOLENOID VALVE (SV1) AND STARTS THE COLD H_2O PUMP (P2) TO RECIRCULATE COLD WATER FOR A MINIMUM OF 10 SECONDS. IF, AFTER 10 SECONDS OF RECIRCULATION, THE TEMPERATURE AT THE RTD IS BELOW 55°F, THEN THE CEA WILL TERMINATE RECIRCULATION. THE RECIRCULATION PATH RUNS FROM THE WATER CHILLER THROUGH P2 AND SV1 AND RETURNS TO THE SUPPLY WATER SYSTEM THROUGH THE AMBIENT WATER INLET. IF THE WATER IN THE WATER CHILLER IS ABOVE THE RTD RESET POINT OF 55°F, DUE TO HIGHER THAN NORMAL ARS H_2O COOLANT LOOP TEMPERATURES FOR EXAMPLE, THE CEA WILL INHIBIT THE RECIRCULATION PROCESS AFTER 20 SECONDS. THE CEA RECIRCULATION INHIBIT LASTS FOR FIVE MINUTES, AFTER WHICH TIME THE CEA WILL REINITIATE RECIRCULATION IF AND WHEN THE RTD TEMPERATURE EXCEEDS 60°F. COLD WATER RECIRCULATION WAS IMPLEMENTED TO INSURE THAT THE COLDEST AVAILABLE WATER WAS IMMEDIATELY AVAILABLE AT THE REHYDRATION STATION. THIS TIMED COLD WATER RECIRCULATION PROCESS IS DESIGNED TO PREVENT CONTINUOUS COLD WATER RECIRCULATION IN THE EVENT THE WATER CHILLER TEMPERATURE IS ABOVE THE RESET POINT
3. DEPRESSION OF THE BLUE COLD WATER PUSHBUTTON ALLOWS DISPENSING OF COLD WATER FROM THE WATER CHILLER. THE BLUE COLD PUSHBUTTON WILL ILLUMINATE WHEN ACTUATED. WHEN SELECTED VOLUME OF WATER HAS BEEN DISPENSED, THE PUSHBUTTON WILL BEGIN TO FLASH ON AND OFF. THE LIGHT WILL EXTINGUISH WHEN THE REHYDRATION STATION (RHS) PACKAGE SWITCH IS OPENED BY RETRACTING THE FOOD/DRINK PACKAGE. THE SPECIFIC FUNCTIONS THAT OCCUR WHEN THE COLD PUSHBUTTON IS DEPRESSED ARE:
   - THE CONTROL ELECTRONICS ASSEMBLY (CEA) OPENS COLD H_2O RECIRCULATION SOLENOID VALVE (SV1) AND STARTS COLD H_2O PUMP (P2). COLD WATER IS RECIRCULATED FOR THREE SECONDS TO PURGE THE LINE
   - WHEN THREE SECONDS ARE UP, THE CEA CLOSES SV1 AND OPENS COLD H_2O DISPENSE SOLENOID VALVE (SV4) TO DISPENSE THE SELECTED QUANTITY
   - WHEN DISPENSE OF THE SELECTED QUANTITY IS COMPLETE, THE CEA CLOSES SV4 AND STOPS PUMP P2. QUANTITY DISPENSED IS A FUNCTION OF TIME AND IS CONTROLLED BY A TIMER IN THE CEA
2. DEPRESSION OF THE YELLOW HOT WATER PUSHBUTTON ALLOWS DISPENSING OF HOT WATER FROM THE HOT WATER TANK. THE YELLOW HOT WATER PUSHBUTTON WILL ILLUMINATE WHEN ACTUATED. WHEN SELECTED VOLUME OF WATER HAS BEEN DISPENSED, THE PUSHBUTTON WILL BEGIN TO FLASH ON AND OFF. THE LIGHT WILL EXTINGUISH WHEN THE REHYDRATION STATION (RHS) PACKAGE SWITCH IS OPENED BY RETRACTING THE FOOD/DRINK PACKAGE. THE SPECIFIC FUNCTIONS THAT OCCUR WHEN THE HOT PUSHBUTTON IS DEPRESSED ARE:
   - THE CONTROL ELECTRONICS ASSEMBLY (CEA) OPENS HOT H_2O RECIRCULATION SOLENOID VALVE (SV2) AND STARTS HOT H_2O PUMP (P1). HOT WATER IS RECIRCULATED FOR THREE SECONDS TO PURGE THE LINE
   - WHEN THREE SECONDS ARE UP, THE CEA CLOSES SV2 AND OPENS THE RHS HOT H_2O DISPENSE SOLENOID VALVE (SV3) TO DISPENSE THE SELECTED QUANTITY
   - WHEN DISPENSE OF THE SELECTED QUANTITY IS COMPLETE, THE CEA CLOSES SV3 AND STOPS PUMP P1. QUANTITY DISPENSED IS A FUNCTION OF TIME AND IS CONTROLLED BY A TIMER IN THE CEA

NOTES:

1. THE REHYDRATION STATION (RHS) PACKAGE SWITCH SERVES AS AN INTERLOCK SWITCH WHICH MUST BE CLOSED BEFORE THE RHS WATER DISPENSING SYSTEM WORKS. THIS IS ACHIEVED BY INSERTING AND PUSHING IN A FOOD/DRINK PACKAGE TO DEPRESS THE SWITCH TO THE CLOSED POSITION. ONCE WATER HAS BEEN DISPENSED, THE SWITCH MUST BE OPENED AND THEN CLOSED AGAIN BEFORE MORE WATER CAN BE DISPENSED. WHILE THE RHS PACKAGE SWITCH IS DEPRESSED, RECIRCULATION IS INHIBITED WITH ONE EXCEPTION. SWITCHING OVEN/RHS-ON, ACTIVATES AN INITIALIZATION PROCESS WHERE BOTH HOT AND COLD H_2O RECIRCULATE FOR 40 SECONDS, DURING WHICH TIME REHYDRATION STATION (RHS) DISPENSE IS INHIBITED. HAVING THE RHS PACKAGE SWITCH DEPRESSED WILL NOT INHIBIT THIS INITIALIZATION RECIRCULATION PROCESS

16. BOTH WATER HEATER SWITCHES MUST BE IN THE "ON" POSITION TO RECEIVE A TELEMETERED "POTABLE HOT H_2O HEATER - ON" INDICATION.
15. THE WATER HEATER SWITCHES AND THE OVEN/RHS SWITCH ARE SENSED CIRCUIT BREAKER TOGGLE SWITCHES. WHEN A TOGGLE IS IN AN "ON" POSITION AND CURRENT EXCEEDS 10 AMPS, THE BREAKERS WILL OPEN AND THE TOGGLE WILL MOVE TO THE "OFF" POSITION. IF ONE OF THESE CIRCUIT BREAKERS DETERIORATES AND OPENS WHILE THE TOGGLE IS IN THE "ON" POSITION, THE OTHER BREAKER WILL OPEN AND THE TOGGLE WILL GO TO THE "OFF" POSITION. NOTE: DURING NOMINAL OPERATIONS, A CLOSED SWITCH COULD BE AN INDICATION OF A CURRENT SPIKE
14. MV3 ON THE REPACKAGED GALLEY HAD A DIFFERENT LOCATION AND FUNCTION THAN THE OLD MV3 ON THE GALLEY. THE REPACKAGED GALLEY MV3 ACTS ONLY AS A FLOW RESTRICTOR TO THE AMBIENT FEED INTO MV2 AND IS ALWAYS OPEN. THIS VALVE IS INTERNAL TO THE REPACKAGED GALLEY

*6 RPGD GLY

SIGNATURE		DATE	NATIONAL AERONAUTICS AND SPACE ADMINISTRATION LYNDON B. JOHNSON SPACE CENTER HOUSTON, TEXAS
DSGN	MICHAEL MURPHY	5/4/84	
DR	B. J. TEDDER JR.		
ENGR	P. J. WOODARD		REPACKAGED GALLEY
ENGR	P. J. Woodard	6/15/92	
APP		6/16/92	
APP			SPACE SHUTTLE — DWG NO 6.6
OMNIPLAN	J. S. Kindrick 6-24-92		ALL
LTR E	PCN 2		121 X 34 — PAGE — SHEET 1 OF 1

BASIC REV E-2

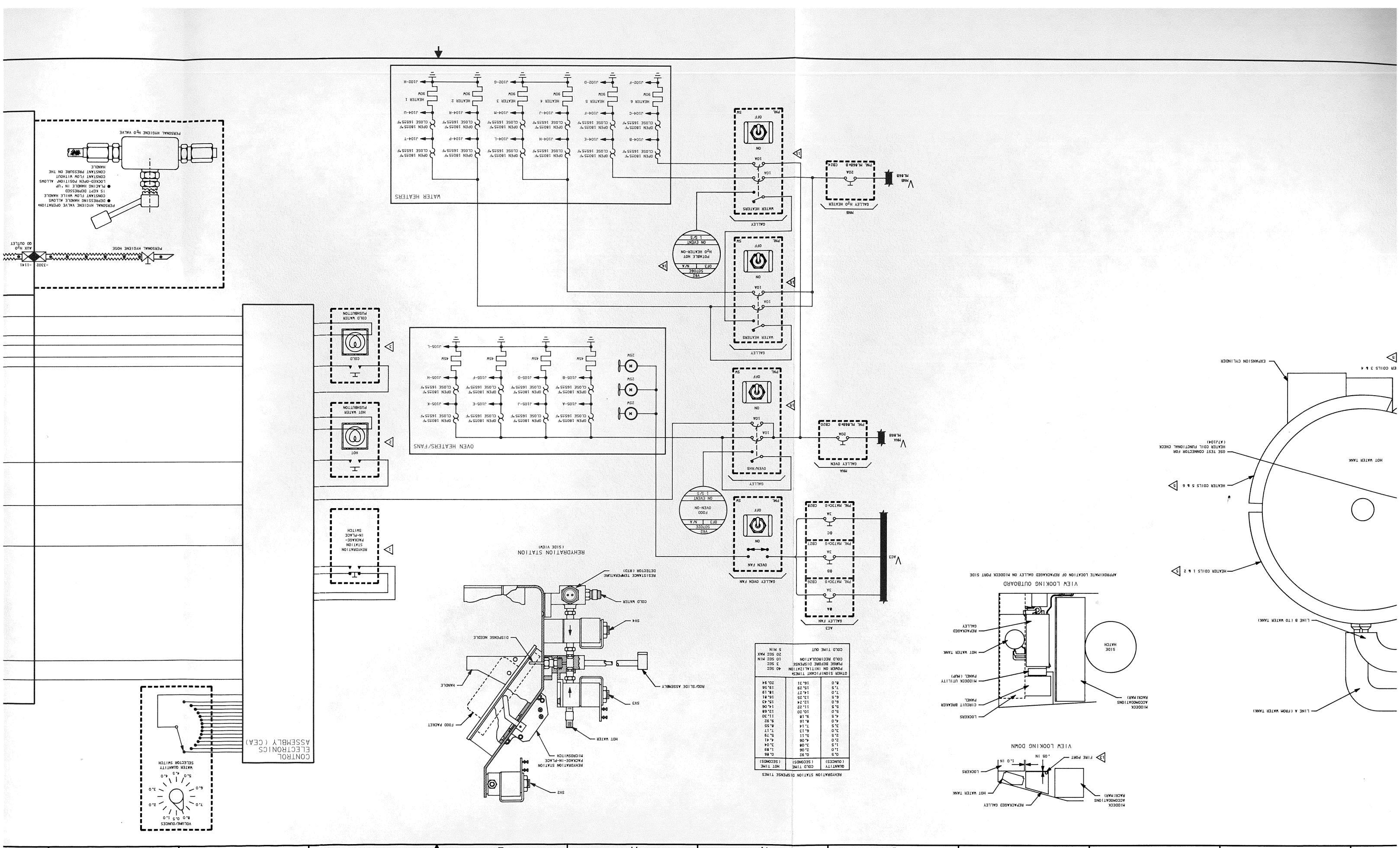

OTHER SIGNIFICANT TIMES POWER ON INITIALIZATION	40 SEC
PUMP BEFORE DISPENSE	3 SEC
COLD RECIRCULATION	10 SEC MIN 20 SEC MAX
COLD TIME OUT	5 MIN

QUANTITY (OUNCES)	COLD TIME (SECONDS)	HOT TIME (SECONDS)
0.5	0.92	0.86
1.0	2.06	1.89
1.5	3.06	3.04
2.0	4.06	4.41
2.5	5.11	5.79
3.0	6.13	7.17
3.5	7.14	8.55
4.0	8.16	9.92
4.5	9.18	11.30
5.0	10.20	12.68
5.5	11.22	14.06
6.0	12.24	15.43
6.5	13.25	16.81
7.0	14.27	18.19
7.5	15.29	19.56
8.0	16.31	20.94

REHYDRATION STATION DISPENSE TIMES

DATE: 11/23/92 | NAME: VSH | VERSION: INK 2

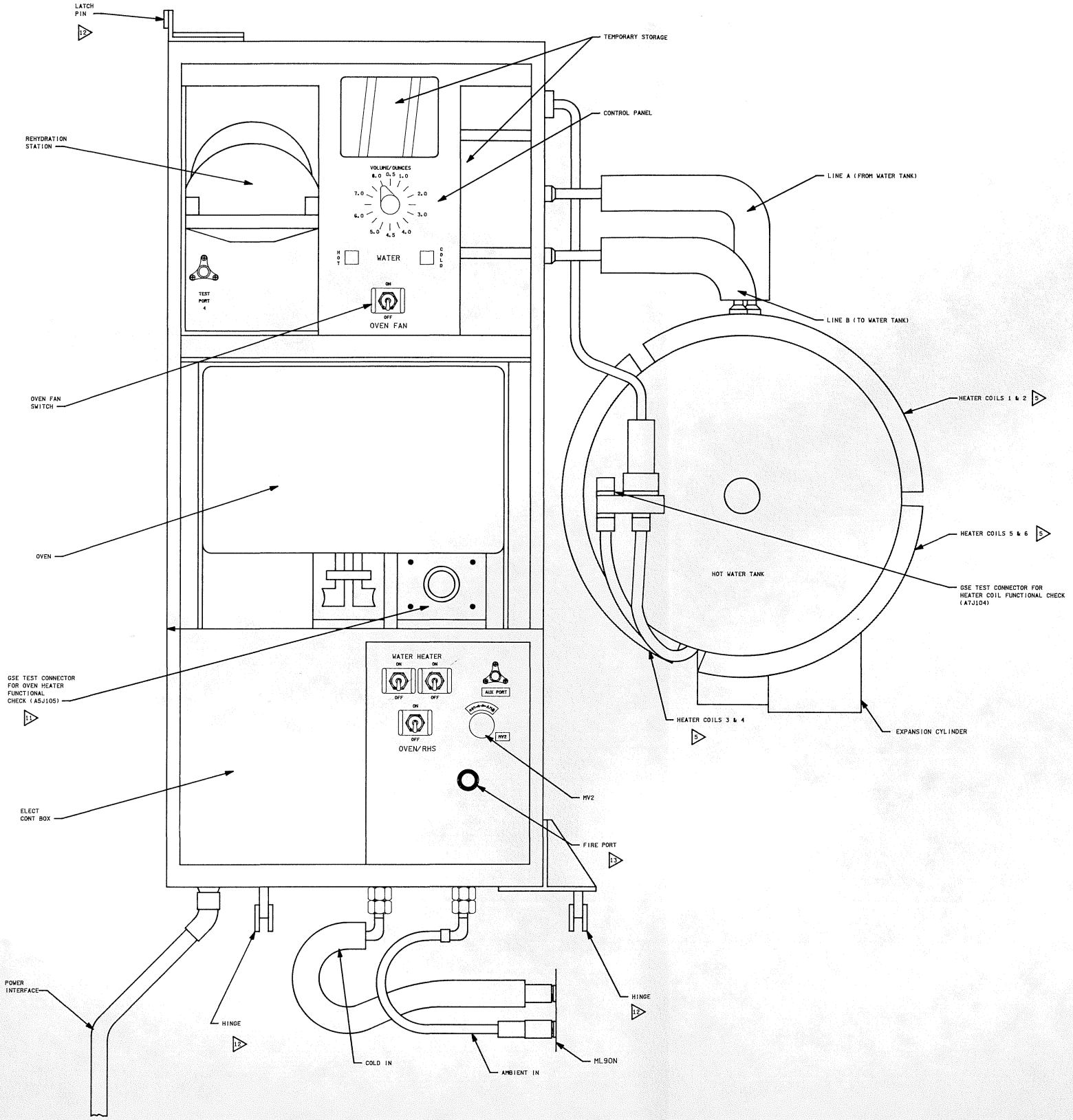

REPACKAGED GALLEY GENERAL LAYOUT

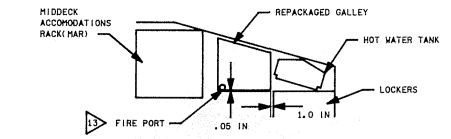

VIEW LOOKING DOWN

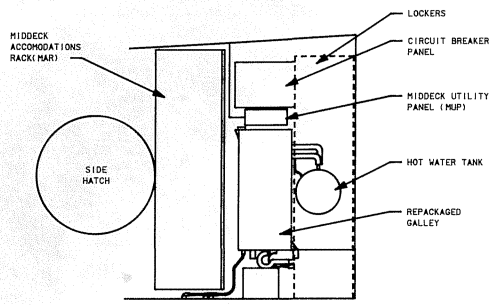

VIEW LOOKING OUTBOARD

APPROXIMATE LOCATION OF REPACKAGED GALLEY ON MIDDECK PORT SIDE

REHYDRATION STATION DISPENSE TIMES

QUANTITY (OUNCES)	COLD TIME (SECONDS)	HOT TIME (SECONDS)
0.5	0.92	0.86
1.0	2.06	1.89
1.5	3.08	3.04
2.0	4.06	4.41
2.5	5.11	5.79
3.0	6.13	7.17
3.5	7.14	8.55
4.0	8.16	9.92
4.5	9.18	11.30
5.0	10.20	12.68
5.5	11.22	14.06
6.0	12.24	15.43
6.5	13.25	16.81
7.0	14.27	18.19
7.5	15.29	19.56
8.0	16.31	20.94

OTHER SIGNIFICANT TIMES	
POWER ON INITIALIZATION	40 SEC
PURGE BEFORE DISPENSE	3 SEC
COLD RECIRCULATION	10 SEC MIN 20 SEC MAX
COLD TIME OUT	5 MIN

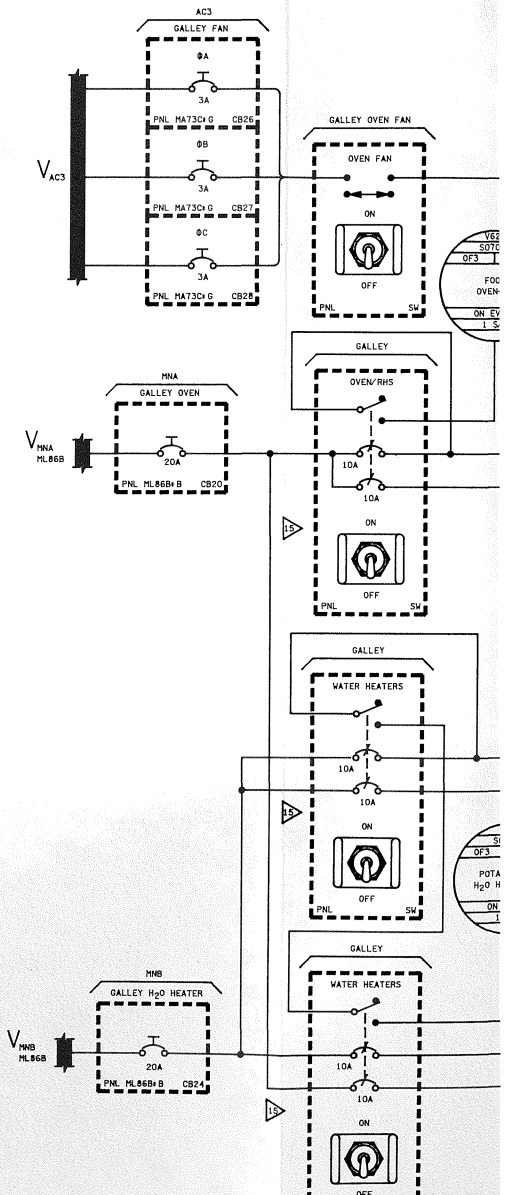

BASIC REV E-2

DATE: 7/25/87	NAME: CAR	VERSION: INIT 2
DATE: 10/21/88	NAME: LAM	VERSION: INIT 3
DATE: 8/18/90	NAME: VSH	VERSION: INIT 4

1T2615A LP 1 H_2O AV BAY 1 HX OUT TEMP)

1T2616A LP 2 H_2O AV BAY 1 HX OUT TEMP)

1P2642A AV BAY 1 FAN ΔP)

1T2645A AV BAY 1 AIR OUT TEMP)

)1)

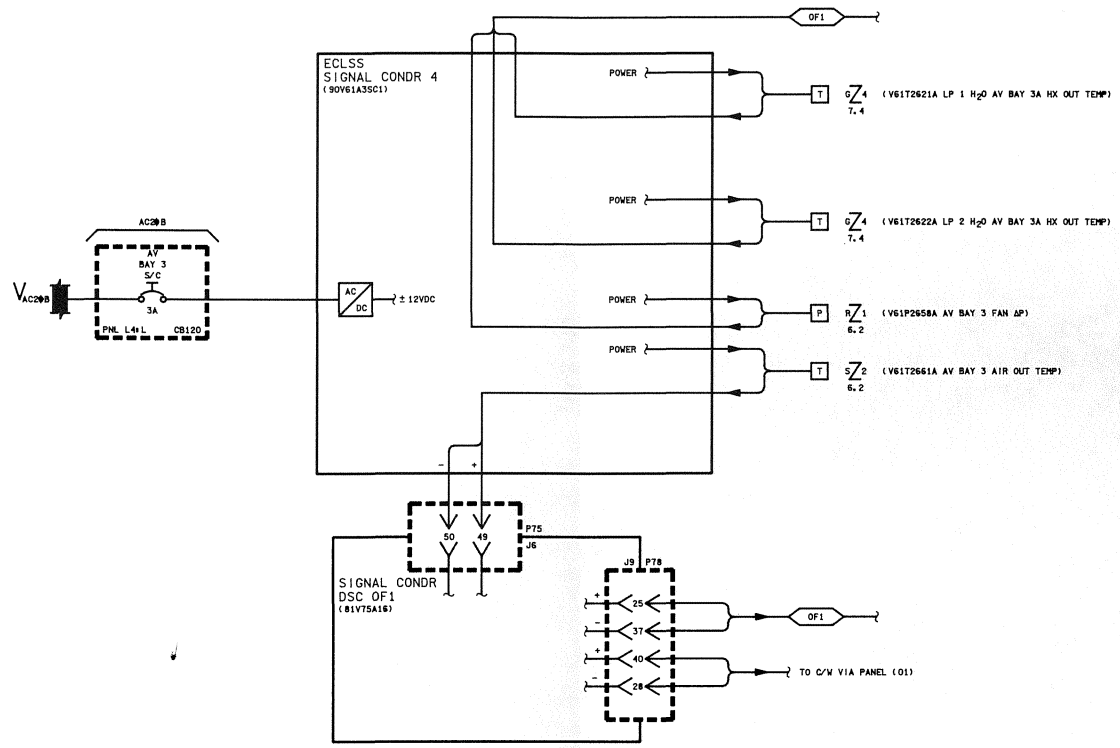

1T2618A LP 1 H_2O AV BAY 2 HX OUT TEMP)

1T2619A LP 2 H_2O AV BAY 2 HX OUT TEMP)

1P2647A AV BAY 2 FAN ΔP)

1T2650A AV BAY 2 AIR OUT TEMP)

)1)

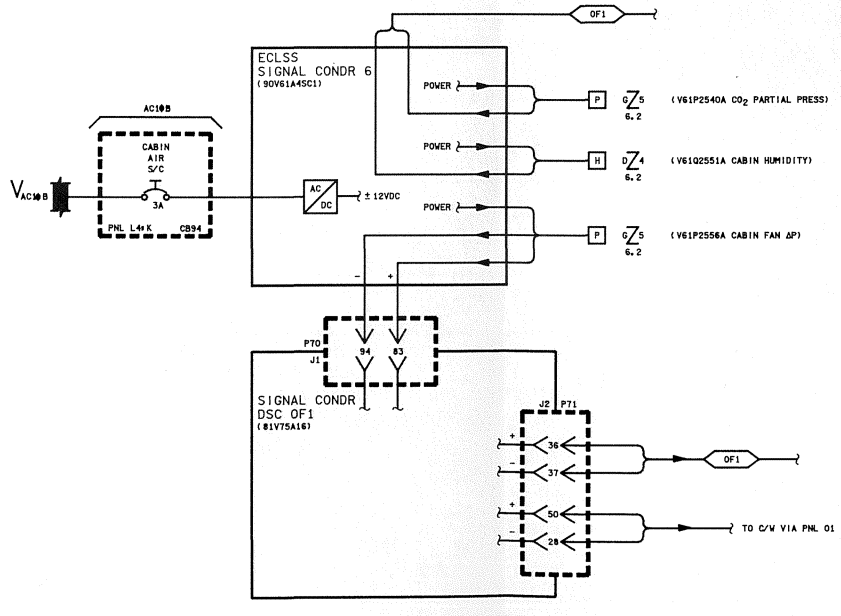

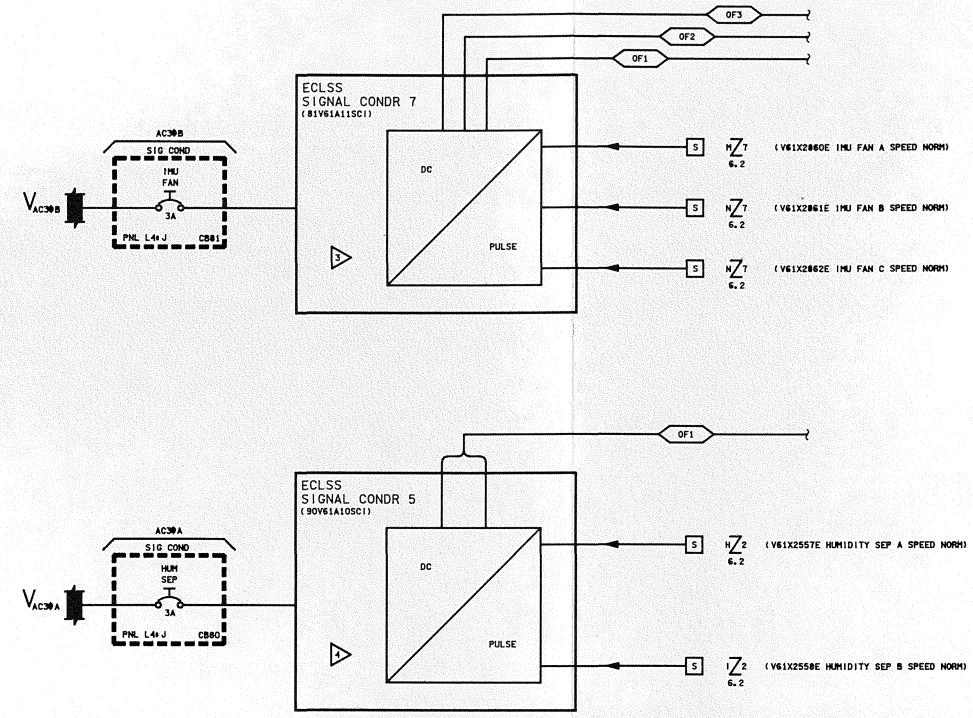

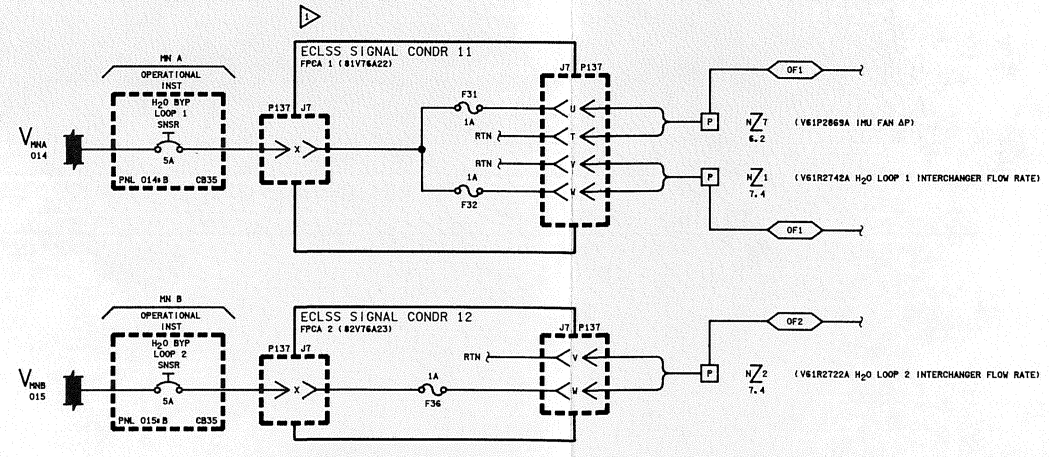

5. REFERENCE TABLE 6.1 FOR LISTING OF ROCKWELL INTERNATIONAL SCHEMATICS APPLICABLE TO THIS DRAWING

△1 THE PULSE/DC CONVERTER ACCEPTS FREQUENCY INPUTS WITH AMPLITUDES OF 0.2 TO 10.0 VAC FROM A PASSIVE ELECTROMAGNETIC SPEED PICKUP AND PROVIDES DISCRETE OUTPUTS. FOR THE FREQUENCY RANGE OF 550.0 ±7.5 Hz TO 665 ±15 Hz THE CONVERTER PROVIDES A 5.0 ±0.5 VDC OUTPUT SIGNAL. FOR FREQUENCIES OUTSIDE THIS RANGE THE CONVERTER OUTPUT IS 0 TO +0.5 VDC

△2 THE PULSE/DC CONVERTER ACCEPTS FREQUENCY INPUTS FROM THE SPEED SENSOR WITH A VOLTAGE OF 0.02 TO 10.0 VAC AND PROVIDES A 0.0 TO 5.0 VDC DISCRETE OUTPUT. THE OUTPUT IS 5.0 VDC FOR INPUTS BETWEEN 550 AND 635 Hz AND 0.0 VDC FOR ALL OTHER INPUT FREQUENCIES

△3 FREON SIGNAL CONDITIONER 1A NORMALLY POWERED BY AC2.
FREON SIGNAL CONDITIONER 1B NORMALLY POWERED BY AC3

NOTES: △4 ECLSS SC 8,9,10 WERE DELETED WHEN DEVELOPMENTAL FLIGHT INSTRUMENTATION (DFI) WAS REMOVED AFTER OFT FLIGHTS.
FPC 1,2 ARE GIVEN LABELS OF ECLSS SC 11,12 TO CORRESPOND TO PROCEDURES AND MALFUNCTIONS WHICH REFERENCE THEM. THEY ARE NOT TRUE SIGNAL CONDITIONERS

8 ECLSS

SIGNATURE		DATE	NATIONAL AERONAUTICS AND SPACE ADMINISTRATION LYNDON B. JOHNSON SPACE CENTER HOUSTON, TEXAS
DSGN V. ORTIZ		3-7-78	
DR M. GILLESPIE		2/24/87	
ENGR P. LANCZYK			ECLSS INSTRUMENTATION
ENGR Paul Lanczyk		8/20/90	
APP Raul Trevino		8/20/90	
APP			SPACE SHUTTLE / DWG NO 6.8
OPNIPLAN S.K. Kimbrell		11-27-90	ALL
LTR E	PCN		104.5 X 34 / PAGE / SHEET 1 OF 1

BASIC REV E

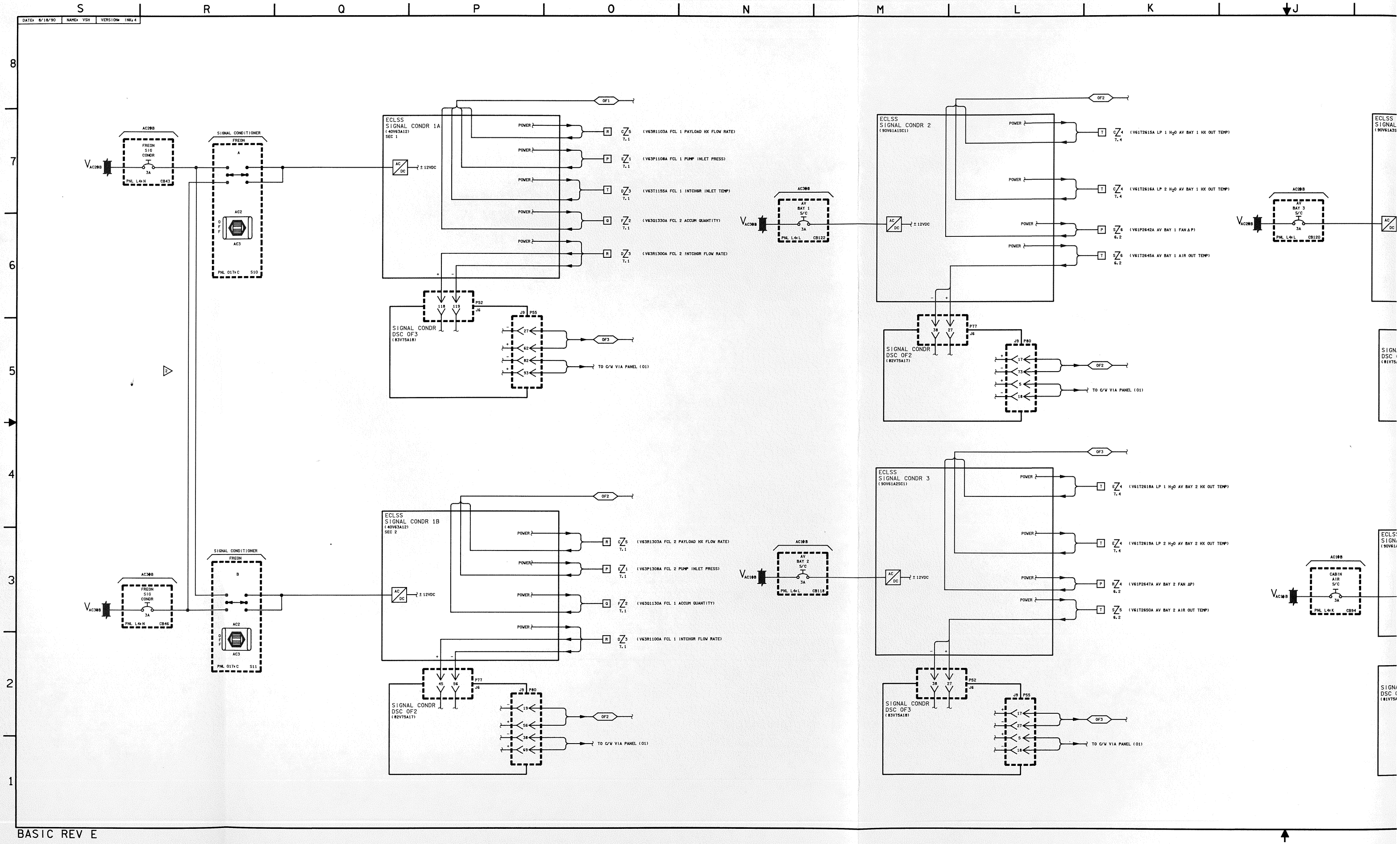

DATE: 8/18/90
NAME: VSH
VERSION: INK.4
ECLSS SIGNAL CONDR 1A (40V63A12) SEC 1
ECLSS SIGNAL CONDR 1B (40V63A12) SEC 2
ECLSS SIGNAL CONDR 2 (90V61A15C1)
ECLSS SIGNAL CONDR 3 (90V61A25C1)
SIGNAL CONDR DSC OF3 (83V75A18)
SIGNAL CONDR DSC OF2 (82V75A17)
SIGNAL CONDITIONER
FREON SIG CONDR
POWER
± 12VDC
TO C/W VIA PANEL (01)
(V63R1103A FCL 1 PAYLOAD HX FLOW RATE)
(V63P1108A FCL 1 PUMP INLET PRESS)
(V63T1155A FCL 1 INTCHGR INLET TEMP)
(V63Q1330A FCL 2 ACCUM QUANTITY)
(V63R1300A FCL 2 INTCHGR FLOW RATE)
(V63R1303A FCL 2 PAYLOAD HX FLOW RATE)
(V63P1308A FCL 2 PUMP INLET PRESS)
(V63Q1130A FCL 1 ACCUM QUANTITY)
(V63R1100A FCL 1 INTCHGR FLOW RATE)
(V61T2615A LP 1 H2O AV BAY 1 HX OUT TEMP)
(V61T2616A LP 2 H2O AV BAY 1 HX OUT TEMP)
(V61P2642A AV BAY 1 FAN ΔP)
(V61T2645A AV BAY 1 AIR OUT TEMP)
(V61T2618A LP 1 H2O AV BAY 2 HX OUT TEMP)
(V61T2619A LP 2 H2O AV BAY 2 HX OUT TEMP)
(V61P2647A AV BAY 2 FAN ΔP)
(V61T2650A AV BAY 2 AIR OUT TEMP)

BASIC REV E

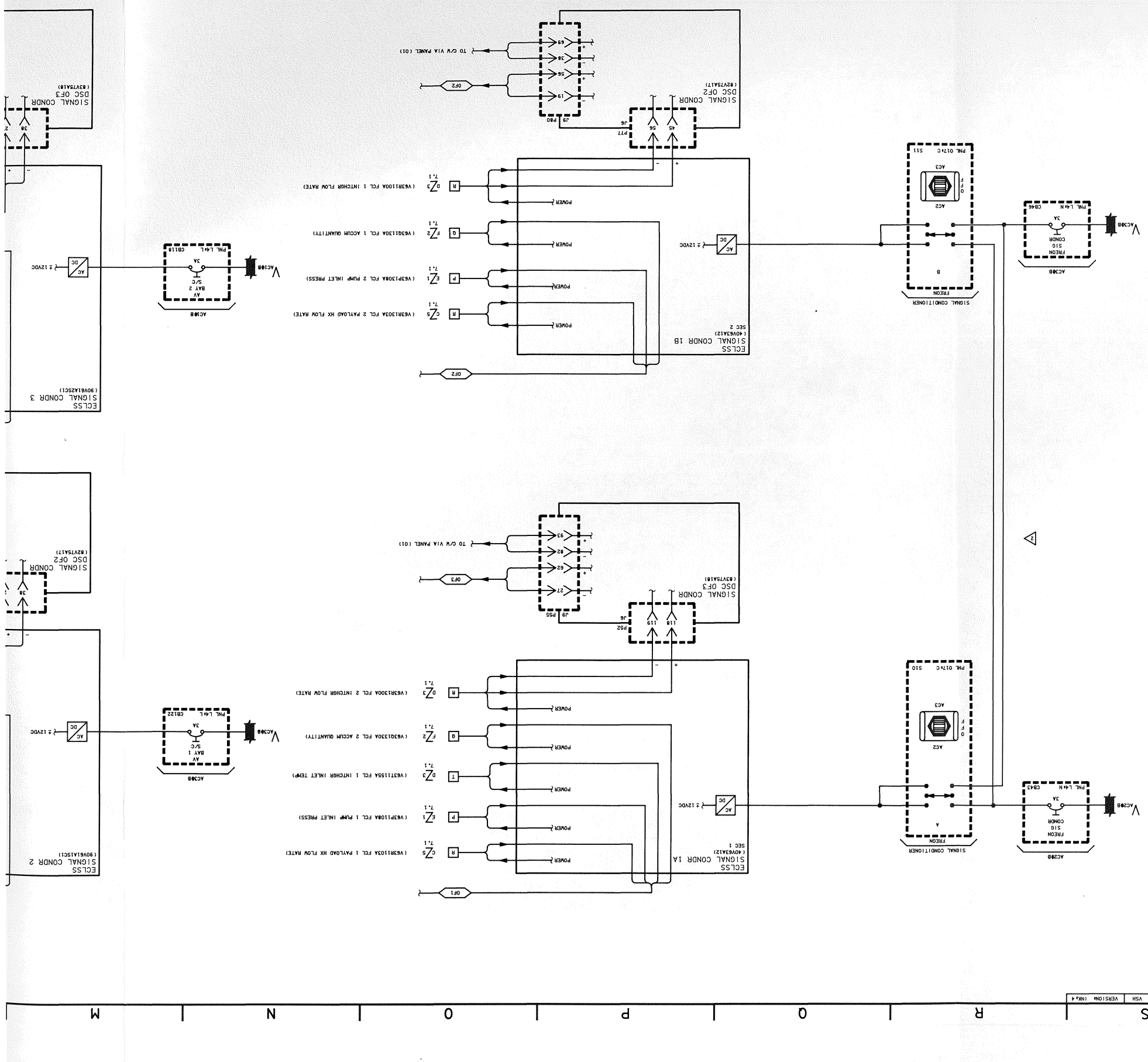

DATE 8/18/90	NAME VSH	VERSION INC4

DATE: 04/21/96	NAME: BJB	VERSION: BPT: 42
DATE: 05/22/96	NAME: MDU	VERSION: BPT: 43
DATE: 06/11/96	NAME: BJB	VERSION: INK: 10

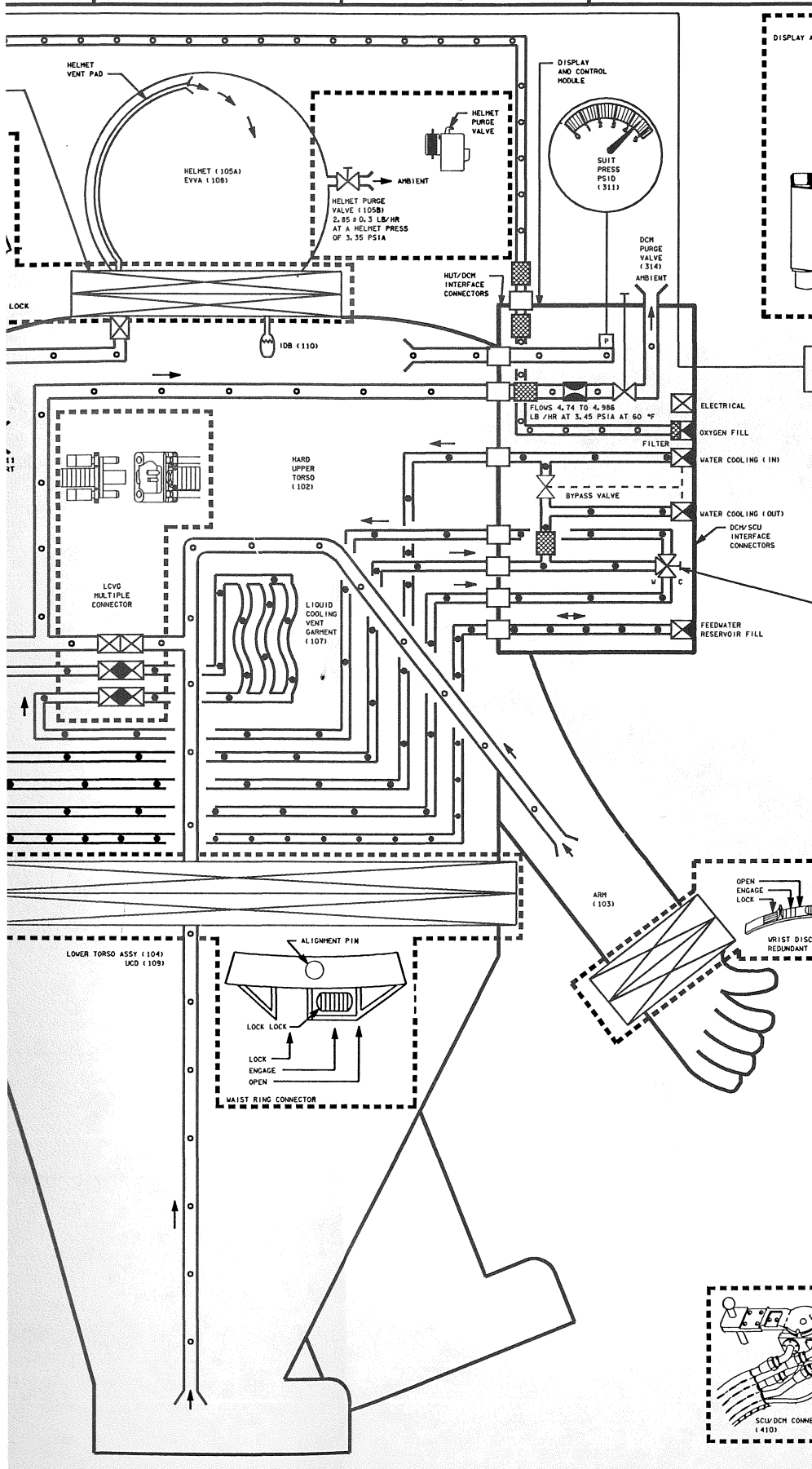

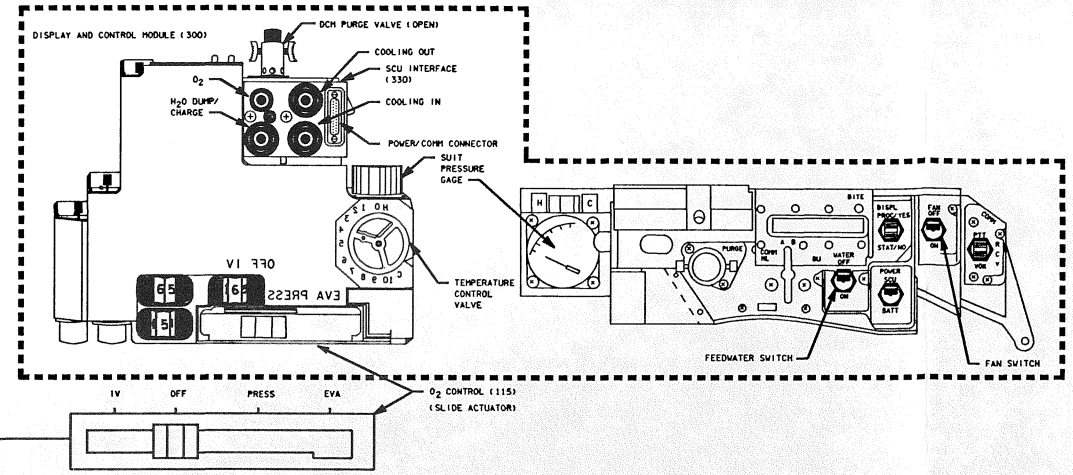

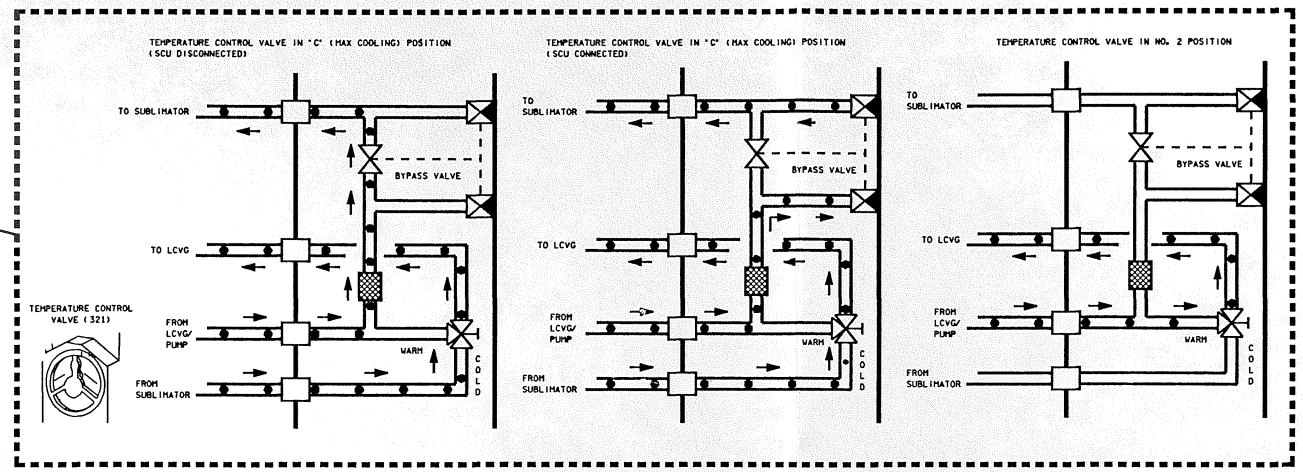

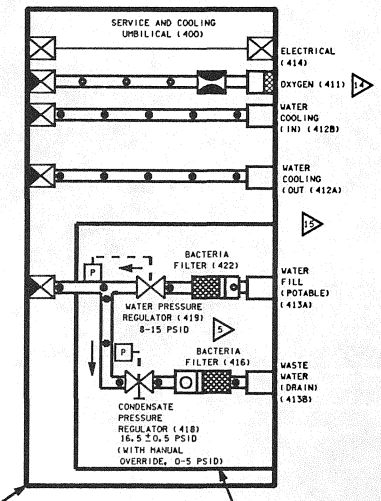

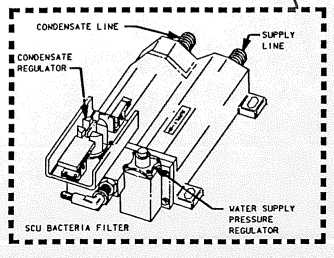

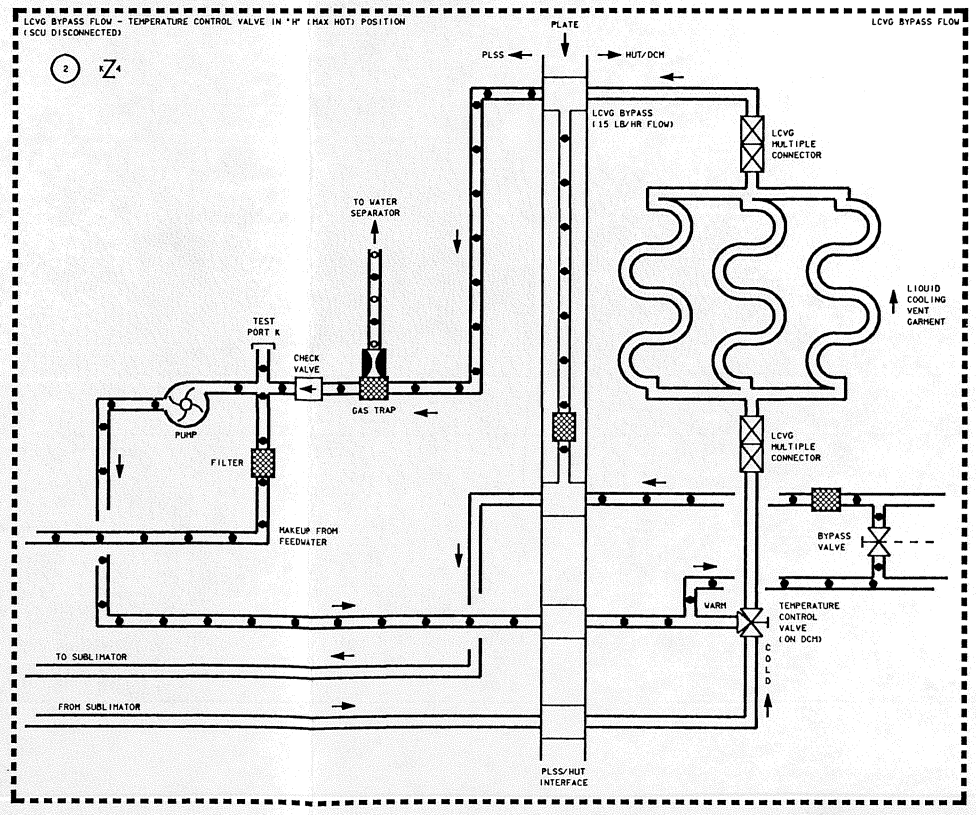

△1 ITEM 120A - FLOW 83-145 SCCH DRY O_2 W/T11 AT 4.3 ± 0.1 PSIA, TP F AT 15.15 ± 0.55 PSIA

△2A SOLENOID VALVE SHARES A SINGLE COIL FOR BOTH OPEN AND CLOSE COMMANDS. FOR LOSS OF EMU POWER, VALVES REMAIN IN LAST COMMANDED POSITION

△2B VALVE HAS BEEN FUNCTIONALLY REPLACED BY SCOF. VALVE ACTIVATION HAS BEEN OBSERVED AT V1103

△3 APPROXIMATELY 1 TO 10% OF VENT FLOW ACCOMPANIES CONDENSATE

△4 VALUES GIVEN ARE AT 3.35 PSIA, 5.4 ACFM MAX AT 4.3 PSIA

△5A SOP PRESSURE SENSOR MAY BE AFFECTED BY EMI

△5B SCU WATER (COOLING IN, COOLING OUT, FEEDWATER) LINES MAX OPERATING PRESSURE 40 PSIA, PROOF 60 PSIA, BURST 80 PSIA

△5C SCU O_2 LINE MAX OPERATING PRESSURE 1050 PSIA, PROOF 1575 PSIA, BURST 2100 PSIA

△5D TEST PORT F BTA ORIFICE CAP IS REMOVED FOR BTA OPERATIONS. FLOW THROUGH TEST PORT F TRIGGERS OPENING OF LOW MODE RELIEF VALVE (120)

△6 BTA IS INSTALLED ON POSITIVE PRESSURE RELIEF VALVE (PPRV) TO ALLOW SPACE SUIT ASSEMBLY TO BE PRESSURIZED UP TO 8.45 PSID FOR BENDS TREATMENT. POPPET KEEPER SCREW IS INSTALLED ON PPRV TO OVERRIDE THE RELIEF VALVE BEFORE BTA IS INSTALLED. POPPET KEEPER SCREW IS STOWED ON BTA HOUSING. IF POPPET KEEPER SCREW NOT INSTALLED, BTA RELIEF VALVE AND ITEM 146 BECOME ADDITIVE

△7 SOP INTERSTAGE GAGE IS USED TO VERIFY NOMINAL PERFORMANCE OF FIRST STAGE REGULATOR

△8A SCOF PRESSURE RELIEF VALVE FUNCTIONALLY REPLACES SOP CHECKOUT PACKAGE RELIEF VALVE (145). 145 IS CURRENTLY UNRELIABLE DUE TO CORROSION PROBLEMS

△8B SOP CHECKOUT FIXTURE (SCOF) IS INSTALLED ON HELMET ATTACHING RING (VENT DUCT) TO SEAL OFF VENTILATION CIRCUIT FOR SOP CHECKOUT

△9 REFER TO TABLE 6.1 FOR DRAWING TRACEABILITY

△10 NOMINAL FILL TIME FOR PRIMARY O2 TANKS IS 15 MINUTES

△11 NOMINAL FILL AND DRAIN TIMES FOR FEEDWATER TANKS (PRIMARY 1 & 2 AND RESERVE) ARE 15 MINUTES

△12 12 PSID, NOMINAL

△13 PUMP PRIMING VALVE OPENS WHEN H2O SEPARATOR DEVELOPS 2-5 PSI HEAD OR WHEN MANUAL OVERRIDE ON BACK OF PLSS IS PRESSED

△14 SOP PRESSURE REGULATED TO:
3.40-3.90 PSID AT 0.00-1.00 LB/HR
3.33-3.90 PSID AT 1.01-4.50 LB/HR
3.33-3.62 PSID AT 4.51-5.26 LB/HR
OVER AMBIENT

2. DELETED

NOTES: △1 COOLANT ISOLATION VALVE OPEN WITH FAN SWITCH

*9 EMU INTRG SYS SCH

SIGNATURE		DATE	NATIONAL AERONAUTICS AND SPACE ADMINISTRATION LYNDON B. JOHNSON SPACE CENTER HOUSTON, TEXAS	
DSGN N. SABBAN		2-6-80		
DR JOAN F. KRANZ		8/4/83		
ENGR S. RAINWATER			EMU INTEGRATED SYSTEM SCHEMATIC	
ENGR				
APP				
APP			SPACE SHUTTLE	DWG NO 6.9
CADS S.K. Kimbrell	6-17-96		ALL	
LTR E PCN 6			126.5 X 34	PAGE SHEET 1 OF 1

BASIC REV E-6

PRIMARY LIFE SUPPORT SUBSYSTEM (100)

SECONDARY OXYGEN PACK (SOP) (200)

T S R Q P O N M L K J

DATE: 06/11/96 | NAME: BJB | VERSION: INK.10

W V U T S R Q P O N

8 7 6 5 4 3 2 1

PRIMARY LIFE SUPPORT SUBSYSTEM (100)

SECONDARY OXYGEN PACK (SOP) (200)

SECONDARY OXYGEN TANKS (210)

0 TO 6800 PSIA
80° TO -180°F
2.631 LBS AT 5800 PSIA AND 80°F (FOR TWO BOTTLES)
MAX OPERATING PRESSURE=7400 PSIA
NORMAL OPERATING PRESSURE=6000 ± 200 PSIA
VOLUME PER BOTTLE=89.2 IN³ (MIN)
PROOF PRESSURE=11,100 PSID
BURST PRESSURE=14,800 PSID

O_2 FILL CONNECTOR (213F)

SOP PRESSURE SENSOR (215) (TO C&W)
0 TO 7400 PSIA
ERROR BAND= ±259 PSI

PRIMARY OXYGEN TANKS (111)

60 TO 950 PSI AT 60 TO 90°F
1.217 LBS USABLE AT 850 PSIA AND 90°F (FOR TWO BOTTLES)
DISCHARGE TO 60 PSI AND 60°F NOMINAL
STORAGE 900 ± 50 PSIA
MAX OPERATING PRESSURE=1050 PSIA
NORMAL OPERATING PRESSURE=900 ± 50 PSIA
VOLUME PER BOTTLE=240 IN³ (MIN)
PROOF PRESSURE=1575 PSIA
BURST PRESSURE=2100 PSIA (MIN)

PRIMARY O_2 SOURCE PRESS SENSOR (112) (TO C&W)
PRESSURE RANGE= 0 TO 1100 PSIA
ERROR BAND= ±2.5% FS OR 27.5 PSI

CHECK VALVE (113A)

FLOW RESTRICTOR (113B)
7.49 LB/HR MAX AT 1050 PSIA
5.5 TO 7.1 LB/HR AT 900 ±50 PSIA

OXYGEN SHUTOFF VALVE (113C)

SUIT PRESSURE REGULATOR (113D)
SUIT PRESSURE REGULATED TO=
4.3 ± 0.1 PSID (EVA AND PRESS)
0.9 ± 0.5 PSID (IV)

WATER PRESSURE REGULATOR (113E)
15.15 ± 0.55 PSIG

SOP PRESSURE GAGE (213E)

PRESSURE RANGE= 0 TO 8000 PSI
ERROR BAND= ±400 PSI

200 PSI

FIRST STAGE REGULATOR (213B)

TEST PORT D INTERSTAGE PRESS

INTERSTAGE GAGE (213G)

PRESSURE RANGE= 0 TO 8000 PSI
ERROR BAND= ±400 PSI

SOP MANUAL OVERRIDE (ITEM 213)

ACTUATION LEVER

SECOND STAGE ITEM 2130

COMBINATION SECOND STAGE REGULATOR, FLOW RESTRICTOR, AND OXYGEN SHUTOFF VALVE (213D), FLOWS 7.49 LB/HR MAX

PLSS/SOP INTERFACE CONNECTOR

SOP CHECKOUT FIXTURE (SCOF)
RELIEF VALVE (495)
7.49 LB/HR (MIN)
DRY O_2 AT 4.7 TO 5.5 PSID AND 10.2 PSIA
NORMAL OPERATING PRESSURE AT 5.5 PSID
PROOF PRESSURE AT 8.25 PS
BURST PRESSURE AT 11.0 P
CRACKING/RESEAT AT 4.7 PS

OXYGEN VENTILATION CIRCUIT

TEST PORT B

CONDENSATE WATER RELIEF VALVE (134)

RELIEF AND RESEAT 2.25-3.7 PSID

LOW MODE OPENS WHEN P2-P1 ≥1 PSI

DUAL MODE RELIEF VALVE (120B)

P AMBIENT

HIGH MODE CRACKING AT 16.25 TO 17.8 PSID RESEAT AT 16.25 PSID

ORIFICE (120A)

TEST PORT G

CHECK VALVE (120C)

TEST PORT F (BTA ORIFICE AND ORIFICE CAP)

VENT FLOW SENSOR/ BACK FLOW CHECK VALVE (121) (TO C&W)
DEACT 0-3.7 ACFM
ACT 3.7-5.7 ACFM

WATER SEPARATOR (123B)

FEEDWATER PRESSURE SENSOR (138) (TO C&W)
PRESSURE RANGE= 0 TO 16 PSIA
ERROR BAND= ±0.4 PSI

SLURPER

WATER OFF / ON

FAN (123A)
FLOWS 6.72 ACFM IN
6.50 ACFM IN PRESS

SUBLIMATOR (140)
UA=120 BTU/HR °F (MIN)

FEEDWATER SHUTOFF VALVE (137)

STEAM TO VACUUM

TEST PORT E

SUBLIMATOR OUTLET TEMP (139) (TO C&W)
TEMPERATURE OPERATING RANGE= 32 TO 104°F

FEEDWATER PRESSURE REGULATOR (136)
2.05-4.15 PSID

EVA - 16.3 ± 0.0
2.6 AMPS
PRESS - 16.0 ± 0
4.5 AM

MOTOR (123D)
18-20 KRPM

TEST PORT H

MAGNETIC COUPLING

PUMP (123C)
240 LB/HR MIN.

FILTER (127)

MAKE UP FROM FEEDWATER

COOLANT ISOLATION VALVE (171)

FAN OFF / ON

RELIEF VALVE (172)
CRACKING AT 0.3 PSID (MIN)
RESEAT AT 0.1 PSID (MIN)

O_2 FEEDWATER SUPPLY PRESSURE SENSOR (132A) (TO C&W)
PRESSURE RANGE= 0 TO 40 PSI
ERROR BAND= ±1 PSIA

PRIMARY WATER TANK NO 1 (131)

PRIMARY WATER TANKS 9.3 LBS OF WATER

PRIMARY WATER TANK NO 2 (162)

RESERVE WATER TANK (148)
0.9 LBS OF WATER

TEST PORT L

TEST PORT J

TEST PORT K

RELIEF VALVE (142)
RELIEF AT 4.0 PSID (MIN)
RESEAT AT 3.0 PSID

H_2O FEEDWATER SUPPLY PRESSURE SENSOR (132B) (TO C&W)
PRESSURE RANGE= 0 TO 40 PSI
ERROR BAND= ±1 PSIA

TEST PORT C

CHECK VALVE (143)

RELIEF AT 1.0 PSID (MAX)
RESEAT AT 0.5 PSID (MIN)

AMBIENT

FEEDWATER RELIEF VALVE (135)
CRACKING/RESEAT AT 19 PSID ± 1.0 PSID

TEST PORT F

3/8-IN. HEX BTA ORIFICE CAP

SOP MANUAL OVERRIDE

INTERSTAGE GAGE

TP-G

TP-D

TP-F

SOP PRESSURE GAGE

SOP

BENDS TREATMENT ADAPTER (BTA)

POPPET KEEPER SCREW STOWED

BTA PRESSURE RELIEF VALVE (491)
0.05 - 7.57 LB/HR
DRY O_2 AT 8.04 - 8.45 PSID
AND 14.7 PSIA
RESEAT 7.8 PSID MIN

POSITIVE PRESSURE RELIEF VALVE

OPEN

AMBIENT

NEGATIVE PRESSURE RELIEF VALVE

BTA GAGE

BASIC REV E-6

DATE: 12/15/92	NAME: LAM	VERSION: BPT$_{21}$
DATE: 12/23/92	NAME: VEM	VERSION: BPT$_{22}$
DATE: 12/29/92	NAME: SKK	VERSION: INH$_6$

DCM

BACKPACK

EXG CIRCUIT

(440) EEN

HUT PLSS INTERFACE

D Z 6 16.9-2 EVC

F Z 4 (1)

REAL TIME DATA SYSTEM (174)

RELAY AND CONTROL CKT

2.4576 MHz

SYS CLK

CPU

ADDR LATCH

RAM

P2OM

UART

BUFFER

OPTO ISOL

LOW PASS FILTER

OPTO ISOL

OBS SIGNALS

RELAY SWITCH

SERIAL DATA

SYSTEM VOLTAGE

DC/DC CONVERTER

+5V

HMULO

S/D

ECHO S/D

2 ACTUATOR

1V

OFF

2V

CAUTION AND WARNING SYSTEM (150)

REVERSE PROTECT/ COND CKT

RESET CKT

CPU

2.4576 MHz

SYSTEM CLOCK

I/O PORT

+5.0V

MEMORY

12 BITS

BITE CKT

WARNING TONE

THRUSTER CUE AND STATUS TONES

I/O PORT

UART

UART CLK

SQUARE AND COND

DIFFER ISOLATION AMPS ≥10MΩ

MUX

FILTERS

FILTERS

+12.1V

V REF

A/D AND BUFFERS

3 SPARE CHANNELS

±12.1V

COND CKT

+12.1V

-12.1V

VOLTAGE DIVIDERS

+5V

+18V

REVERSE PROTECT AND ΔV DIODES

+5V

+12.1V

-12.1V

SYSTEM VOLTAGES

TONE INTERFACE

D Z 8 16.9-2

1 E Z 8

CCA

+V

L Z 4 16.9-2

DC VOLT REGULATOR

IN +V ADJ

732K

3.57K

4.99K

3.57K

AMPLIFIER STAGE

+V REG

SUMMING NETWORK STAGE

510

380

380

380

380

510

RIGHT MIC BOOM

DC ISOL TRANS

604

604

604

604

TO EVC K Z 5 16.9-2

10

FROM LEFT MIC BOOM

FROM EVC L Z 7 16.9-2

EARPHONES

6

BATTERY +17V (490)

BAT VOLT SENSE (+)

BAT VOLT SENSE (-)

BAT VOLT SENSE CKT

BAT RETURN

16.67 MΩ CURRENT SENSE RESISTOR

BAT CURRENT SENSE CKT

COOLANT ISOLATION VLV (171)

NC

OPEN

FEEDWATER SHUTOFF VLV (137)

NC

OPEN

FAN (WINDINGS) POWER

FAN ELECTRONICS POWER

TO FAN MOTOR LOGIC CIRCUITS

TACH OUTPUT

MOTOR (1230)

SPEED CONTROL

PEAK DETECTOR

RAMP GENERATOR

STALL

1=UNDERSPEED

SPD CNTL

1=OVERSPEED

1=SHUTDOWN

FAN RESTART (5 SEC)

HALL SENSOR #1

STATOR (WINDINGS AT 90°)

ROTOR (PERMANENT MAGNETS)

WINDINGS

HALL SENSOR #2

MOTOR ASSEMBLY

PRE-AMP

COMP

+V BIAS ADJUST -V

PRE-AMP

COMP

+V BIAS ADJUST -V

ENABLE

DECODER

NO 1

NO 2

NO 3

NO 4

DRIVE CIRCUIT 4

DRIVE CIRCUIT 3

DRIVE CIRCUIT 2

DRIVE CIRCUIT 1

SOP

+5

SUIT PRESS (114)

+5

PRIMARY O_2 PRESS (112)

+5

FEEDWATER PRESS (138)

SUBLIMATOR OUTLET TEMP (139)

+5

FEEDWATER SUPPLY PRESS H_2O O_2 (132)

±12.1

SOP PRESS (215)

-12.1

EVA POSITION (116)

-12.1

VENT FLOW SENSOR (121)

±12.1

$PPCO_2$ TRANSDUCER (122)

13. THE WIRING HARNESS CONNECTIVITY DRAWING SHOWS THE ROUGH PHYSICAL LAYOUT OF THE WIRING BUNDLES IN THE EMU AND THE COMPONENTS TO WHICH THEY CONNECT

WIRING HARNESS LINE LEGEND:

151 HARNESS — — — — — —

152 HARNESS ----------

153 HARNESS — — — — —

156 HARNESS ——————

FRONT MOUNTED

12 BOTH MICROPHONES AND BOTH EARPHONES HAVE REDUNDANT TRANSDUCER ELEMENTS. FAILURE OF ONE MICROPHONE AND/OR ONE EARPHONE STILL PERMITS FULL COMMUNICATION

11. REFER TO TABLE 6-I FOR DRAWING REFERENCE

10 LEFT MIC BOOM CIRCUITRY IS IDENTICAL TO RIGHT MIC BOOM

9 RTDS DATA TRANSMISSION AS FOLLOWS: 101 SEC OF EXG DATA FOLLOWED BY 4 SEC OF LOGIC DEADBAND, FOLLOWED BY 15 SEC OF SERIAL DATA AT 50 BAUD

8 SPEED CONTROL IS ENABLED IF FAN RPM EXCEEDS 19,300 ±300.

7 UNDERSPEED BIT IS SET WHEN FAN RPM DROPS BELOW 13,500.

6 RATED AT 26.6 AMP-HR, MINIMUM NOMINAL VOLTAGE 16.8 VDC WITH FAN RUNNING. NOMINAL EMU CURRENT 2.6 TO 4.2 AMPS AT VACUUM.

5 BOTH VALVES ARE IDENTICAL. CLOSE COMMAND ENERGIZES COIL FOR 51 MSEC AND LATCHES VALVE TO THE CLOSED POSITION. OPEN COMMAND ENERGIZES COIL FOR 66 MSEC AND LATCHES VALVE TO THE OPEN POSITION.

4 WINDINGS ARE PHYSICALLY LOCATED IN THE MOTOR ASSEMBLY. THEY ARE REPRESENTED HERE TO SHOW THEIR INTERFACE WITH THE DRIVE CIRCUITS.

3 RAMP GENERATOR AND PEAK DETECTOR CONSTITUTE THE SQUARE WAVE TO DC CONVERSION UNIT.

2 AT STARTUP OUTPUT=1 FOR 5 SEC. OUTPUT=0 THEREAFTER.

NOTES: 1. -14.2V SUPPLY COMES FROM DC/DC CONVERTER K Z 5

10 EMU ELEC SCHEM

SIGNATURE		DATE	NATIONAL AERONAUTICS AND SPACE ADMINISTRATION LYNDON B. JOHNSON SPACE CENTER HOUSTON, TEXAS	
DSGN				
DR				
ENGR J. DUTTON			EMU ELECTRICAL SCHEMATIC	
ENGR		12-30-92		
APP		30 DEC 92		
APP		12/30/92	SPACE SHUTTLE	DWG NO. 6.10
OMNIPLAN S.K. Kimbrell		1-22-93	ALL	
LTR E	PCN 2		126.5 X 34	PAGE SHEET 1 OF 1

BASIC REV E-2

T S R Q P O N M L K J

WIRING HARNESS CONNECTIVITY

DCM

DCM BACKPACK

PLSS (BACK VIEW)

RTDS 174

P38

PPCO2 122

FAN/PUMP/ WATER SEPARATER MOTOR 123

P7

COOLANT ISOLATION VALVE 171

P33

J10A

P10

P10 J10

EMU ELECTRICAL HARNESS 440

CCA

HUT (BACK VIEW)

P27

P28

EVA CABLE 13540

BIOMED SIGNAL ECG CONDITIONER

152 HARNESS

151 HARNESS

MOTOR DATA

P35

DCM ELECTRONICS MODULE 385 (FRONT VIEW)

J1 → TO SCU

J37

P37

O_2 ACT ASSY

J4

J3

P4

P3

SHEAR PLATE 115

MECHANICAL CABLE

SOP (BACK VIEW)

DISPLAY AND CONTROL MODULE (300)

DCM PURGE VALVE (OPEN)

SCU INTERFACE (330)

PRESSURE GAGE LIGHT

SCU CONNECTOR (J1)

DISPLAY SWITCH

FAN SWITCH

COMM SWITCH

SUIT PRESSURE GAGE

TEMPERATURE CONTROL VALVE

FRONT VIEW

TOP VIEW (WEARING DCM)

DISPLAY SWITCH

FEEDWATER SWITCH

POWER SWITCH

FAN SWITCH

O_2 ACTUATOR

PRESS

OFF

-14.2V

DISPLAY PROC/YES

STAT/NO

DISPLAY SW (368)

-14.2V

VEHICLE PWR SENSE

BATT VOLT SENSE

DISCRETE INTERFACE

FAN ON

FEEDWATER OPEN

BITE LCD (363)

+12V

+3.8V

DISPLAY INTERFACE

+5

CLOCK

LCD DISPLAY (369)

-21V

PRESSURE GAGE LIGHT

DISPLAY INTENSITY (361)

+5.6V

+18V

+14.2V

-14.2V

DC/DC CONVERTERS AND REGULATORS

TONE INTERFACE

16.9-2

EVC

16.9-2

25 SUIT PWR RTN -

12 SUIT PWR SENSE + (VEHICLE PWR)

13 +18.5VDC

EMI FILTER

16 BATT SENSE

11 BATT CHARGING VOLT

CAM MICRO SW

SCU

5

6

7

8

9

G1

G2

1 HARDLINE AUDIO IN LO

3 HARDLINE AUDIO IN HI

22 HARDLINE AUDIO OUT LO

20 HARDLINE AUDIO OUT HI

18 HARDLINE KEY RTN

2 HARDLINE KEY

14 SENSE RTN

J1

SCU CONNECTOR

T4 T6 T5 FAN & ELECTRONICS PWR

T7 T9 T8 BATT + 17V

T1 T3 EVC AND VLV PWR

T2

POWER SCU

BATT

POWER SW (364)

BATT + 17V

CB 1.4 ±.6A

EVC PRIMARY

CB 1.65 ±.2A

COMM HL A B BU

EVC MODE SW (362)

16.9-2

CLIV

EVC SECONDARY

CB 2.05 ±.2A

CB

FAN OFF ON

FAN SW (366)

CB .7 ±.2A

WATER OFF ON

WATER SW (367)

16.9-2 FROM EVC RCV

PTT VOX R C V

PTT SW (365)

BATTERY +17V

(490)

BAT VOLT SEN

BAT VOLT SEN

BAT RETURN

16.67 MI CUR SENSE RESIST

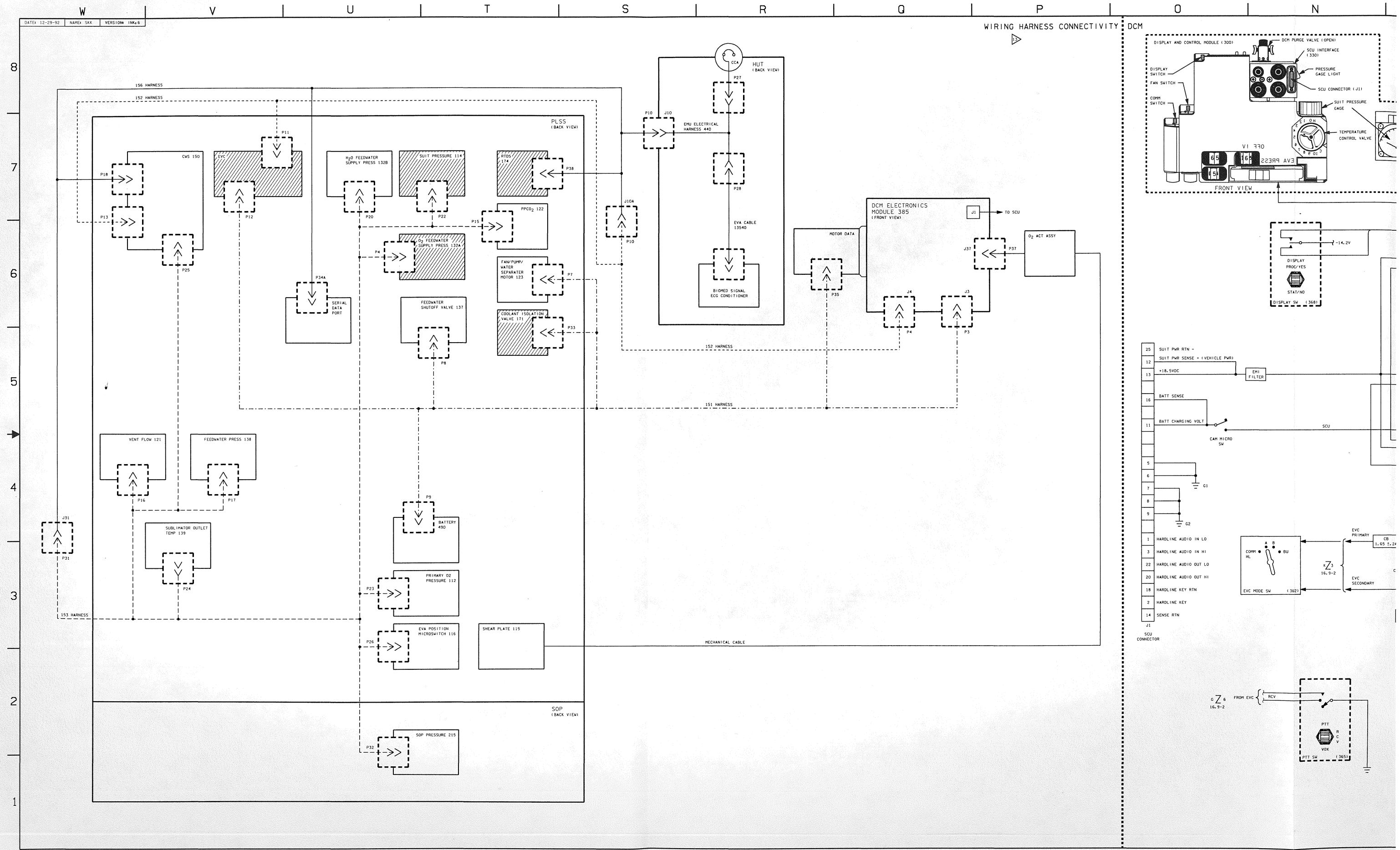

DATE: 12-29-92
NAME: SKK
VERSION: INK.6
WIRING HARNESS CONNECTIVITY
DCM
156 HARNESS
152 HARNESS
PLSS
(BACK VIEW)
CWS 150
EVC
H2O FEEDWATER SUPPLY PRESS 132B
SUIT PRESSURE 114
RTDS 174
PPCO2 122
O2 FEEDWATER SUPPLY PRESS 132A
FAN/PUMP/WATER SEPARATER MOTOR 123
SERIAL DATA PORT
FEEDWATER SHUTOFF VALVE 137
COOLANT ISOLATION VALVE 171
VENT FLOW 121
FEEDWATER PRESS 138
SUBLIMATOR OUTLET TEMP 139
BATTERY 490
PRIMARY O2 PRESSURE 112
EVA POSITION MICROSWITCH 116
SHEAR PLATE 115
SOP
(BACK VIEW)
SOP PRESSURE 215
153 HARNESS
151 HARNESS
HUT
(BACK VIEW)
EMU ELECTRICAL HARNESS 440
EVA CABLE 13540
BIOMED SIGNAL ECG CONDITIONER
MOTOR DATA
DCM ELECTRONICS MODULE 385
(FRONT VIEW)
TO SCU
O2 ACT ASSY
MECHANICAL CABLE
DISPLAY AND CONTROL MODULE (300)
DCM PURGE VALVE (OPEN)
SCU INTERFACE (330)
DISPLAY SWITCH
FAN SWITCH
COMM SWITCH
PRESSURE GAGE LIGHT
SCU CONNECTOR (J1)
SUIT PRESSURE GAGE
TEMPERATURE CONTROL VALVE
FRONT VIEW
DISPLAY PROC/YES
STAT/NO
DISPLAY SW (368)
SUIT PWR RTN -
SUIT PWR SENSE + (VEHICLE PWR)
+18.5VDC
EMI FILTER
BATT SENSE
BATT CHARGING VOLT
CAM MICRO SW
SCU
HARDLINE AUDIO IN LO
HARDLINE AUDIO IN HI
HARDLINE AUDIO OUT LO
HARDLINE AUDIO OUT HI
HARDLINE KEY RTN
HARDLINE KEY
SENSE RTN
SCU CONNECTOR
EVC PRIMARY
EVC SECONDARY
EVC MODE SW (362)
FROM EVC
RCV
PTT
VOX
PTT SW (365)

BASIC REV E-2

DATE: 4/12/88	NAME: MAG	VERSION: INK, 4
DATE: 9/13/90	NAME: VSH	VERSION: BPT, 3
DATE: 09/26/90	NAME: MAG	VERSION: INK, 4

FSS

MMU

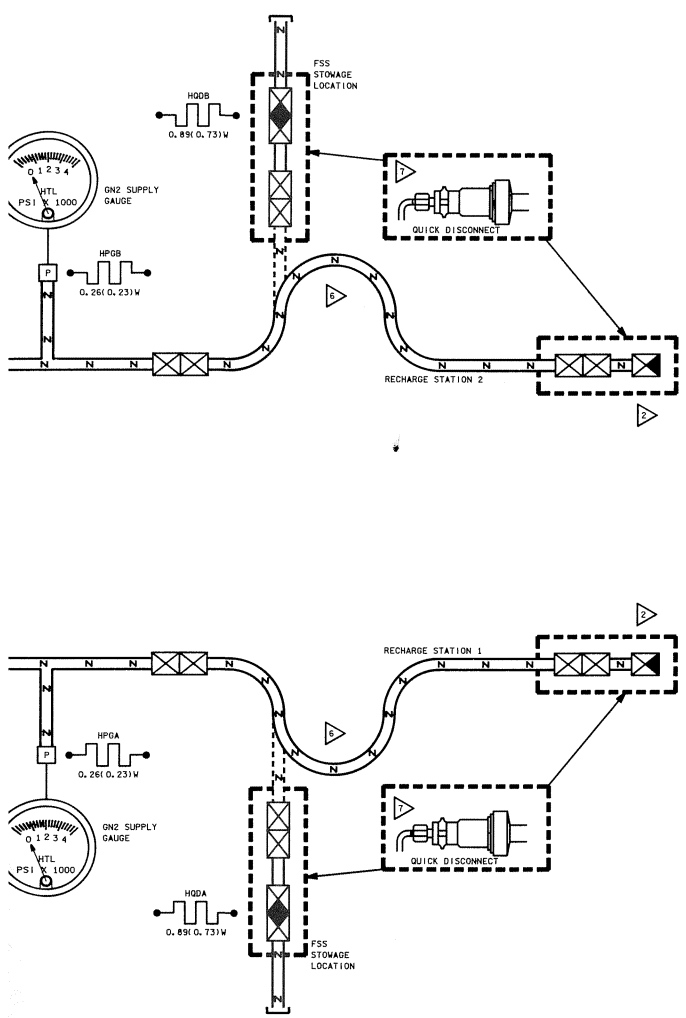

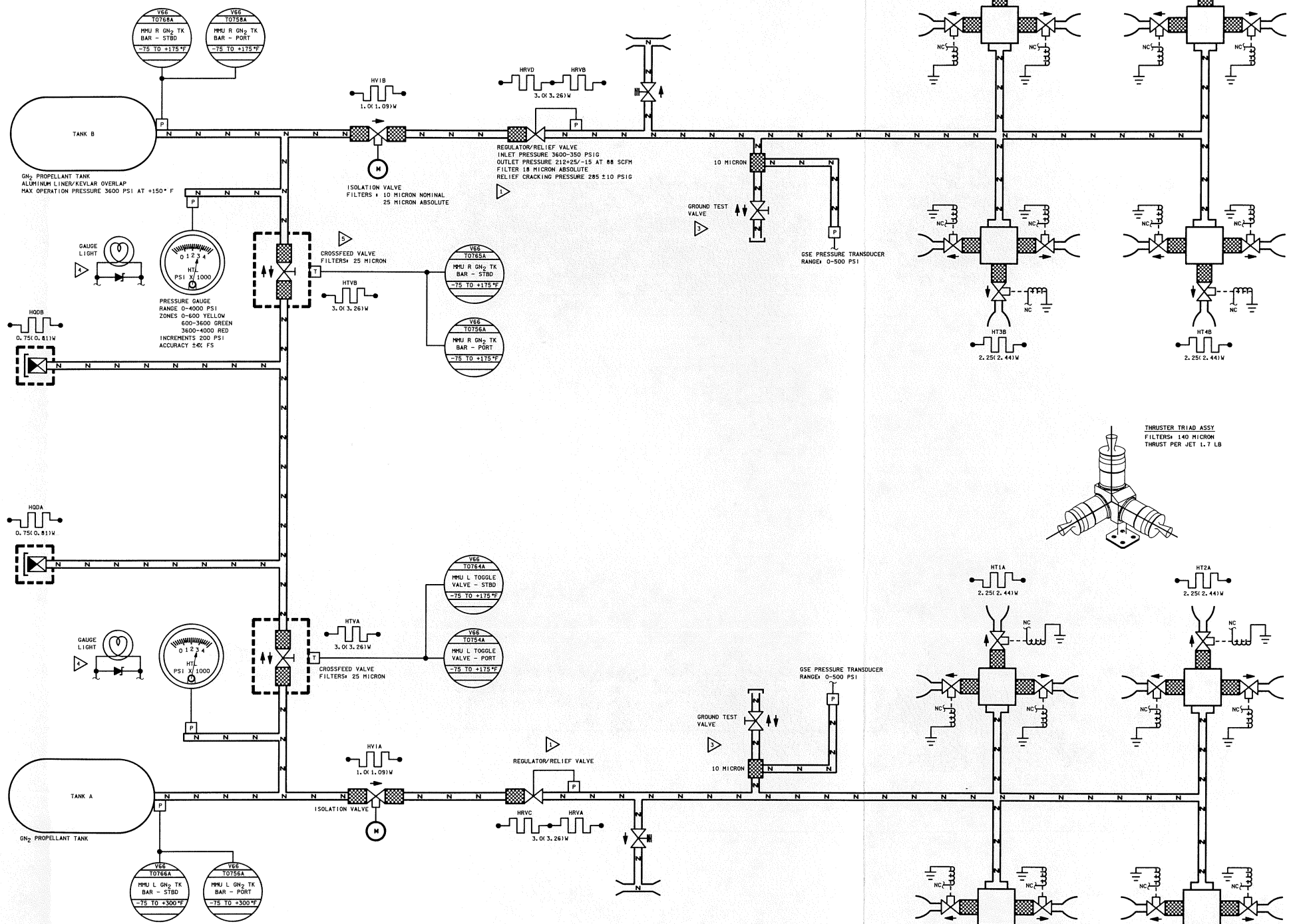

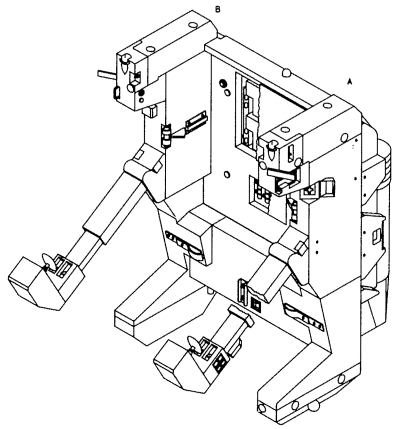

△1 PORT ELEC/GN_2 INTERFACES ARE PROVIDED ON OV-103, OV-104, AND OV-105 ONLY

△2 STARBOARD ELEC/GN_2 INTERFACES ARE PROVIDED ON OV-104 AND OV-105 ONLY

△3 OTHER MMU AND FSS HEATERS NOT ASSOCIATED WITH THE PROPULSION SYSTEM ARE NOT SHOWN

△4 POWER CONSUMPTION FOR MMU HEATERS LISTED AS: ON INTERNAL (ON EXTERNAL) POWER

△5 POWER CONSUMPTION FOR FSS HEATERS LISTED AS: WITH MMU (WITHOUT MMU)

△6 MANUAL VALVE USED TO BLEED DOWN LINE PRESSURE AT FSS FOR REMOVAL/SERVICING (GROUND OPS ONLY)

△7 THIS B-NUT USED BY CREW FOR CONTINGENCY RELEASE OF QD DURING MMU RECHARGE

△8 FLEXIBLE HOSE WITH B-NUT DISCONNECTS

△9 FSS VENT VALVE IS A MOMENTARY OPEN, NORMALLY CLOSED VALVE. FSS SUPPLY VALVE AND MMU CROSSFEED/RECHARGE VALVES HAVE DETENTS IN THE OPEN AND CLOSED POSITION

△10 THE MMU GAGE LIGHT ACTS AS A HEATER AS WELL AS ILLUMINATING THE PRESSURE GAGE

△11 THE VALVE, FILTER AND PRESSURE TRANSDUCER ARE FOR GROUND TEST PURPOSES ONLY AND ARE NOT CREW ACCESSIBLE IN FLIGHT

△12 THE COUPLER (FEMALE) HALF OF THE QUICK DISCONNECT HAS AN INTEGRAL MANUAL VALVE. WHEN DEMATED FROM THE NIPPLE THE COUPLER IS LOCKED IN THE CLOSED POSITION. WHEN MATED, THE COUPLER CAN BE OPENED OR CLOSED TO CONTROL FLOW

NOTES: △1 THE PRESSURE REGULATOR, RELIEF VALVE AND FILTERS, ARE AN INTEGRAL UNIT. HEATER HRVB(A) IS FOR THE REGULATOR PORTION AND HEATER HRVD(C) IS FOR THE RELIEF VALVE

11 MMU & FSS PROP

SIGNATURE		DATE
DSGN	B. J. TEDDER JR.	3/4/88
DR	L. M. BUCHANAN	
ENGR	S. BLEISATH	
ENGR	[signature]	9/27/90
APP	[signature]	27 Sep 90
APP	R. T. Neal	9/28/90
OMNIPLAN	S. K. Kantak	9-29-90

LTR	E	PCN	

NATIONAL AERONAUTICS AND SPACE ADMINISTRATION
LYNDON B. JOHNSON SPACE CENTER HOUSTON, TEXAS

MMU & FSS PROPULSION SCHEMATIC

SPACE SHUTTLE | ALL | 104.5 X 34

DWG NO 6.11

PAGE | SHEET 1 OF 1

BASIC REV E

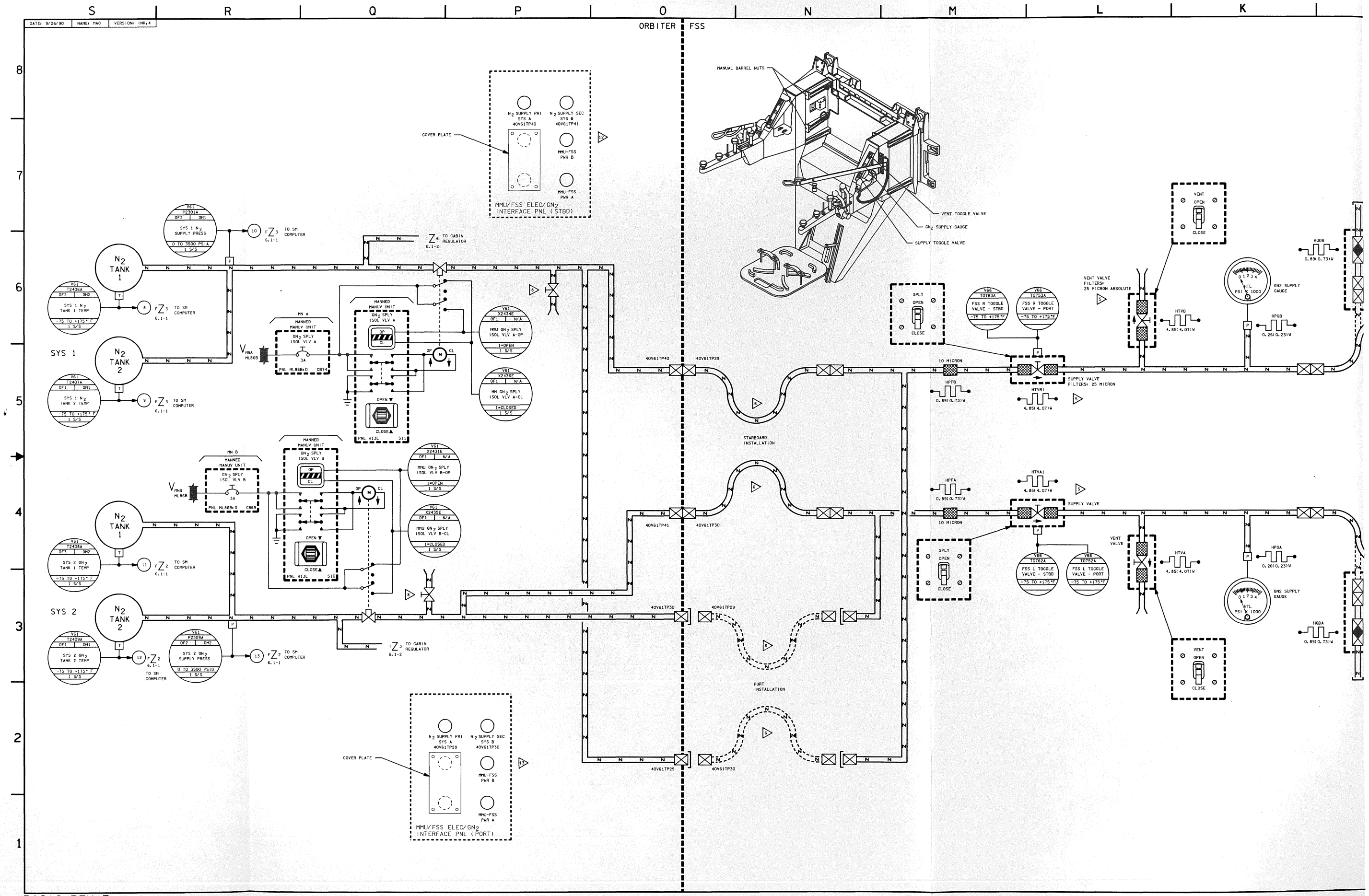

DATE: 9/26/90
NAME: MAG
VERSION: INK.4
ORBITER
FSS
MANUAL BARREL NUTS
VENT TOGGLE VALVE
GN2 SUPPLY GAUGE
SUPPLY TOGGLE VALVE
COVER PLATE
N2 SUPPLY PRI SYS A 40V61TP40
N2 SUPPLY SEC SYS B 40V61TP41
MMU-FSS PWR B
MMU-FSS PWR A
MMU/FSS ELEC/GN2 INTERFACE PNL (STBD)
SYS 1 N2 SUPPLY PRESS
0 TO 3500 PSIA
TO SM COMPUTER
TO CABIN REGULATOR
N2 TANK 1
N2 TANK 2
SYS 1 N2 TANK 1 TEMP
SYS 1 N2 TANK 2 TEMP
SYS 2 GN2 TANK 1 TEMP
SYS 2 GN2 TANK 2 TEMP
SYS 2 GN2 SUPPLY PRESS
MANNED MANUV UNIT
GN2 SPLY ISOL VLV A
GN2 SPLY ISOL VLV B
MMU GN2 SPLY ISOL VLV A-OP
MM GN2 SPLY ISOL VLV A-CL
MMU GN2 SPLY ISOL VLV B-OP
MMU GN2 SPLY ISOL VLV B-CL
PNL R13L
STARBOARD INSTALLATION
PORT INSTALLATION
40V61TP40
40V61TP29
40V61TP41
40V61TP30
10 MICRON
SUPPLY VALVE FILTERS: 25 MICRON
VENT VALVE FILTERS: 25 MICRON ABSOLUTE
SUPPLY VALVE
VENT VALVE
FSS R TOGGLE VALVE - STBD
FSS R TOGGLE VALVE - PORT
FSS L TOGGLE VALVE - STBD
FSS L TOGGLE VALVE - PORT
GN2 SUPPLY GAUGE
SPLY
OPEN
CLOSE
VENT
HPFB
HPFA
HTVB
HTVA
HTVA1
HTVB1
HPGB
HPGA
HQDB
HQDA
SYS 1
SYS 2
MMU/FSS ELEC/GN2 INTERFACE PNL (PORT)

BASIC REV E

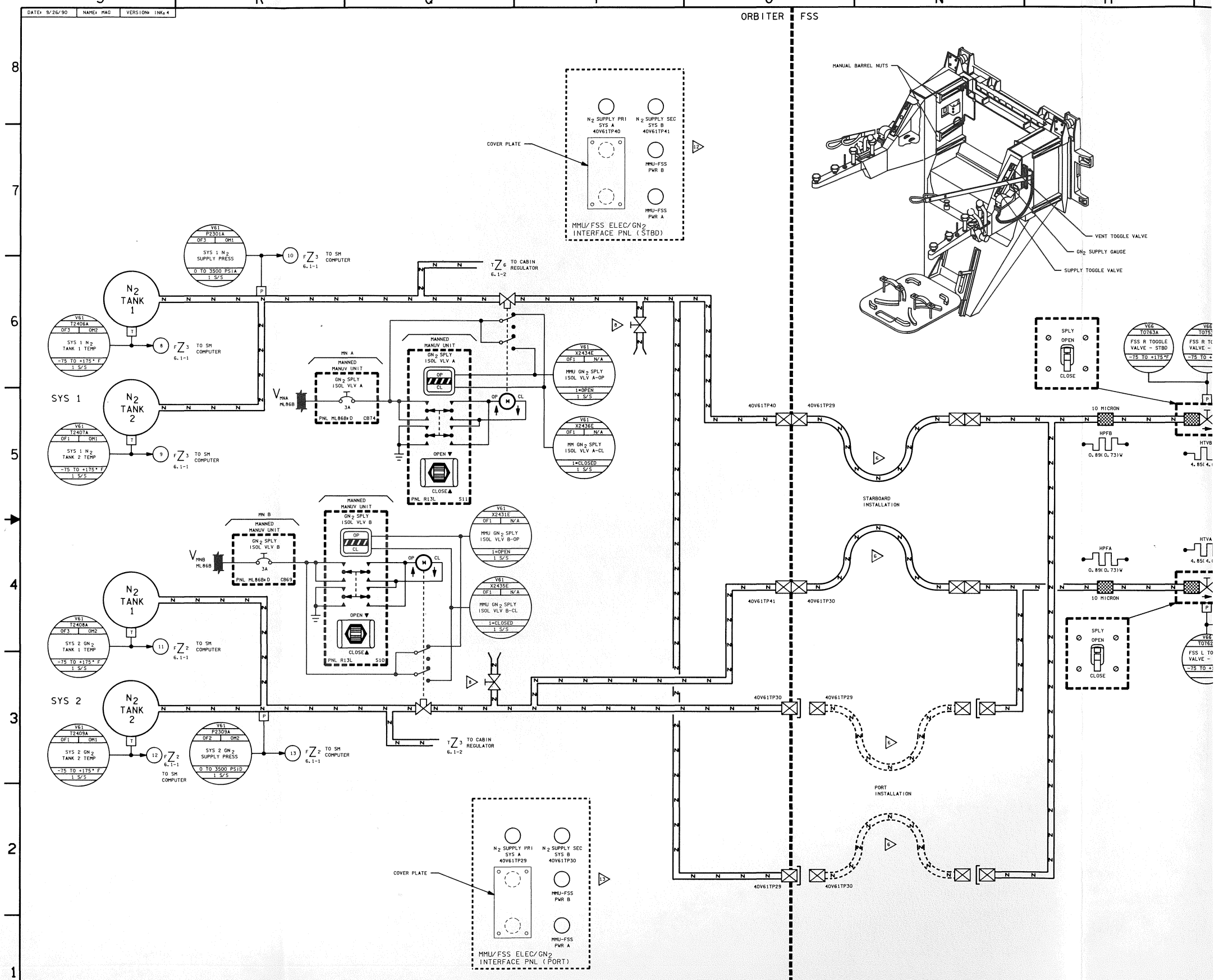

DATE: 9/26/90
NAME: MAG
VERSION: INK, 4
ORBITER
FSS
MANUAL BARREL NUTS
VENT TOGGLE VALVE
GN2 SUPPLY GAUGE
SUPPLY TOGGLE VALVE
COVER PLATE
N2 SUPPLY PRI SYS A 40V61TP40
N2 SUPPLY SEC SYS B 40V61TP41
MMU-FSS PWR B
MMU-FSS PWR A
MMU/FSS ELEC/GN2 INTERFACE PNL (STBD)
SYS 1 N2 SUPPLY PRESS
0 TO 3500 PSIA
TO SM COMPUTER
TO CABIN REGULATOR
N2 TANK 1
N2 TANK 2
SYS 1
SYS 2
SYS 1 N2 TANK 1 TEMP
SYS 1 N2 TANK 2 TEMP
SYS 2 GN2 TANK 1 TEMP
SYS 2 GN2 TANK 2 TEMP
SYS 2 GN2 SUPPLY PRESS
MANNED MANUV UNIT
GN2 SPLY ISOL VLV A
GN2 SPLY ISOL VLV B
MMU GN2 SPLY ISOL VLV A-OP
MM GN2 SPLY ISOL VLV A-CL
MMU GN2 SPLY ISOL VLV B-OP
MMU GN2 SPLY ISOL VLV B-CL
PNL R13L
40V61TP40
40V61TP29
40V61TP41
40V61TP30
STARBOARD INSTALLATION
PORT INSTALLATION
10 MICRON
HPFB
HPFA
SPLY
OPEN
CLOSE
FSS R TOGGLE VALVE - STBD
FSS L TO
MMU/FSS ELEC/GN2 INTERFACE PNL (PORT)

BASIC REV E

DATE: 07/28/94	NAME: LAM	VERSION: INR, 6
DATE: 03/20/96	NAME: JMB	VERSION: BPT, 24
DATE: 03/04/96	NAME: MDU	VERSION: INR, 7

CNTRL 2 28V DC PEV OPEN CMD

CNTRL 1 AC1 3Ø FAN POWER

PEV OPEN CMD CNTRL 2

V61 P2923A 1 OF 2 N/A — FILTER ΔP — 0 TO 3 IN H2O — 1 S/S F

V61 P2922A 1 OF 1 N/A — VACUUM PRESSURE — 0 TO 5 MMHG — 1 S/S C

V61 12924A 2 OF 2 N/A — INLET TEMP — 32 TO 133°F — 1 S/S C

V61 P2921A 3 OF 3 N/A — CO_2 PARTIAL PRESS — 0 TO 30 MMHG — 1 S/S F

CNTRL S/C — ±12VDC

FLOW CONTROL VALVE

MUFFLER — 40 μM

INLET FILTER/MUFFLER/FAN ASSEMBLY

MUFFLER

CNTRL 2 AC3 3Ø FAN POWER

VCV A INLET

VCV B INLET

VACUUM POPPET

AIR POPPETS

VACUUM POPPET

V61 P2901A 1 OF 1 N/A — CNTRL 1 BED A PRESSURE — 0 TO 20 PSIA — 1 S/S C

V61 P2911A 3 OF 3 N/A — CNTRL 2 BED A PRESSURE — 0 TO 20 PSIA — 1 S/S C

CNTRL 2 28V DC

PRESSURE EQUALIZATION VALVE (PEV) MODULE

PEV 1 — PEV 2 — PEV 3 — PEV 4 — PEV 5 — PEV 6

NC

ACTUATOR A "OPEN" CW BED A AIR POPPETS BED B VACUUM POPPETS

CCW (CL) POSITION

ACTUATOR, POSITION INDICATOR AND BRAKING LATCH

+8A DC

CW (OP) COIL

CCW (CL) COIL

+12V PWR A(C)

NOTE: VCVs SHOWN CONFIGURED FOR STATE NO. 8

V61 P2902A 2 OF 2 N/A — CNTRL 1 BED B PRESSURE — 0 TO 20 PSIA — 1 S/S C

V61 P2912A 1 OF 1 N/A — CNTRL 2 BED B PRESSURE — 0 TO 20 PSIA — 1 S/S C

V61 P2903A 3 OF 3 N/A — CNTRL 1 BED ΔP — 0 TO 5 IN H2O — 1 S/S C

V61 P2913A 2 OF 2 N/A — CNTRL 2 BED ΔP — 0 TO 5 IN H2O — 1 S/S C

BED A

BED B

ACTUATOR B "OPEN" CW BED A VACUUM POPPETS BED B AIR POPPETS

CNTRL 1 CCW

CNTRL 2 CCW

CNTRL 1 AC1 ØA

CNTRL 2 AC3 ØA

CW (OP) AND CCW (CL) (2 WIRES)

COMPRESSOR RPM INDICATOR TO CONTROL LOGIC

ΔP=0.5 PSI

MUFFLER

CNTRL 1 28V DC

AC1 4

AC3 4

VCV B OUTLET

VCV A OUTLET

AIR POPPETS

VACUUM POPPET

TO VACUUM VENT DUCT

CNTRL 2 AC3 3Ø COMPRESSOR POWER

CNTRL 1 AC1 3Ø COMPRESSOR POWER

CNTRL 1 28V DC PEV OPEN CMD (6 WIRES)

COMPRESSOR POWER CNTRL 2

COMPRESSOR POWER CNTRL 1

PEV OPEN CMD CNTRL 1

BED A PRESS

BED B PRESS

BED ΔP

TEMP

$PPCO_2$

VACUUM PRESS

FILTER ΔP

CNTRL 2 XDUCER POWER

BED A — BED B — BED ΔP

CNTRL 1 XDUCER POWER

BED A — BED B — BED ΔP

23. LOGIC COMPONENTS THAT ARE NOT LABELED ARE FUNCTIONAL REPRESENTATIONS OF THE ACTUAL COMPONENTS. THESE REPRESENTATIONS ARE USED TO SIMPLIFY THE CONTROLLER LOGIC. GATES AND FLIP FLOPS WHICH ARE LABELED (U2.4, U1.3, ETC.) ARE ACTUAL COMPONENTS WITHIN THE CONTROLLER. THESE LABELS CORRESPOND TO THE VENDOR DRAWING LABELS. THESE GATE LABELS ARE ALSO USED IN THE EECOM CONSOLE HANDBOOK

22. 0.21 IN ID BED REPRESS LINE ACTS AS RESTRICTION

21. FLIP-FLOPS FOR STATE 4D, 10D AND 5, 11 INTENTIONALLY LEFT OUT IN DRAWING

20. LINKAGES, AND DISPLACEMENTS OF PUSHRODS SHOWN ARE NOT REPRESENTATIVE OF THE ACTUAL CO2 RMVL SYS UNIT. SEE DWG 6.12-2

19. CONNECTOR J4 IS CAPPED AND LANYARD ON CONTROLLER 2

18. LOGIC SCHEMATIC DOES NOT REFLECT ACTUAL CONTROLLER LOGIC CIRCUITRY

17. OPTOCOUPLER OF FAIL LIGHT EMPLOYS REVERSE LOGIC: REQUIRES +12V POWER AT C1 SIGNAL TO TURN OFF LIGHT. HENCE, APPLYING ONLY MN AT C1 DC POWER, THE RCRS WILL TURN ON THE LIGHT

16. REFERENCE STATE TABLE FOR OUTPUT DECODER FUNCTION

15. AN ACTIVE STATE WILL GND SPECIFIC WIRES AS INDICATED IN THE STATE LOGIC TABLE. NORMAL OFF CONDITION IS +12V

14. ON DISP 66, NEAR THE CONTROLLER NUMBER, AN M WILL APPEAR WHEN A CONTROLLER AC AND A CONTROLLER DC POWER IS ON. THE ASTERISK IS AN INDICATION THE CO2 RMVL SYS IS POWERED, NOT OPERATING

13. CONTROLLER MALFUNCTION FAULT TELEMETRY DURATION IS 6 SECONDS DUE TO TIME DURATION BETWEEN S1 AND S10. PANEL MOSIF FAIL LIGHT WILL STAY ILLUMINATED UNTIL CONTROLLER IS UNPOWERED

12. COMMON INSTRUMENTATION CIRCUITRY HOUSED ON BOTH CONTROLLERS AND IS INDEPENDENT OF CONTROLLER OPERATIONS. CIRCUITRY ON CONTROLLER 1 ARBITRARILY SELECTED TO RECEIVE POWER FROM MAIN B. COMMON INSTRUMENTATION (VACUUM PRESSURE, FILTER DELTA PRESSURE, TEMPERATURE AND PPCO2) IS USED FOR SYSTEM PERFORMANCE AND EVALUATION

11. TWO POSITION MANUAL VALVE SETTING
-5, 6, 7 CREW SIZE 24.5 CFM
-4 CREW SIZE 16 CFM

10. MICROSWITCH VALVE POSITION INDICATOR (VPI). VPI'S ARE INTERNALLY MOUNTED IN THE ACTUATOR AND ARE REDUNDANT TO EACH CONTROLLER. ACTUATORS ONLY PROVIDE (CCW OR CLOSED) FEEDBACK. THE WIRES FOR THE (CW OR OPEN) INDICATION HAVE BEEN SPLICED TO CONSTANTLY SHOW A OPEN FEEDBACK TO THE CONTROLLER

9. VALVES DESIGNED TO AUTOMATICALLY CLOSE WITH A LOSS OF POWER

8. CO2 RMVL SYS DIMENSION: 38 3/4" X 18 3/4" X 20", WEIGHT = 330 LBS

7. POPPETS WILL NOT OPEN IF ΔP >3.4 PSI

6. CO2 RMVL SYS SORBENT MATERIAL CONSISTS OF 0.5MM WHITE SPHERICAL BEADS OF RA-D-7, A POROUS POLYMERIC ACRYLIC ESTER SUBSTRATE, THINLY COATED WITH A VISCOUS LIQUID OF PEI-18, POLYETHYLENIMINE. THE SORBENT IS PACKED WITHIN A MATRIX ALUMINUM FOAM TO FACILITATE HEAT TRANSFER BETWEEN THE ABSORBING BED WHICH GENERATES HEAT AND THE REGENERATING BED WHICH REQUIRES HEAT

5. CANISTER FILTER SCREEN 400 X 400 X 0.001 300 STAINLESS STEEL WIRE SUPPORTED BY 2 X 2 X 0.047 300 STAINLESS STEEL WIRE

4. ACTUATOR PROVIDES 10-20 IN-LBS MIN TORQUE. SINGLE PHASE 115V 400 HZ MOTOR

3. MUFFLER
-OPEN CELL POLYIMIDE FOAM

2. INLET FILTER/MUFFLER/FAN ASSEMBLY
- 50 (0.0055 WIRE DIA) X 250 (0.0045 WIRE DIA)
- IDENTICAL TO CABIN FAN FILTER
- 40 MICRON NOMINAL FILTRATION ,70 MICRON ABSOLUTE FILTRATION

NOTES: 1. ROTARY TYPE COMPRESSOR 450 SCFM AT 4000 RPM COMPRESSOR, MOTOR 115 VOLTS 3 PHASE 400 HZ INDUCTION, MAXIMUM INPUT POWER 250 WATTS

12 EDO-CO2 RMVL SYS

SIGNATURE		DATE	NATIONAL AERONAUTICS AND SPACE ADMINISTRATION LYNDON B. JOHNSON SPACE CENTER HOUSTON, TEXAS
DSGN V. HUNTER		8/15/90	
DR			EDO - CO2 REMOVAL SYSTEM
ENGR P. LAMCZYK			
ENGR		7/5/96	
APP		7/5/96	
APP			SPACE SHUTTLE / DWG NO 6.12
CADS J.K. Kimbrell		6-17-96	OV 102, 105 ONLY
LTR E	PCN 6		126.5 X 34 / PAGE / SHEET 1 OF 2

BASIC REV E-6

RCRS CONTROLLER LOGIC

RCRS CONTROLLER 2

RCRS CONTROLLER 1

SOLID STATE RELAY (SSR) OPTOCOUPLER

SIGNAL CONDITIONING CIRCUITRY

CIRCUIT ACRONYMS

INPUT SIGNALS TO OPTOCOUPLERS

DISTRIBUTE TO LOGIC CIRCUITS, OPTOCOUPLERS

SIGNALS OUT TO ORBITER OI MDM'S

FAULT LOGIC CIRCUITRY DRAWING NO. 6.12-2

CNTRL 1 VACUUM POPPET

CNTRL 2 VACUUM POPPET

CNTRL 1 ACT 0A

CNTRL 2 ACT 0A

CNTRL 1 ACT 3 0A

CNTRL 2 ACT 3 0A

CNTRL 1 ACT 3 0A FAN POWER

CNTRL 2 ACT 3 0A FAN POWER

CNTRL 1 28V DC POWER

CNTRL 2 28V DC POWER

CNTRL 1 VOUCER POWER

CNTRL 2 VOUCER POWER

BED A

BED B

VACUUM VENT DUCT

ACTUATOR BUS RELAY

AC BUS ENABLE

DC 1 BUS ENABLE

DC 2 BUS ENABLE

ACTUATOR BUS ENABLE

ACTUATOR BUS RELAY DRIVER

AC BUS RELAY DRIVER

DC 1 BUS RELAY DRIVER

DC 2 BUS RELAY DRIVER

EMI FILTER

+28 VDC

+12 GND -12

AC/DC CONVERTER ±12VDC

VOLT REG

FAIL LIGHT SIGNAL

OPER LIGHT SIGNAL

DC PWR TO BED A, B PRESSURE SENSOR AND BED DELTA PRESSURE SENSOR

+12V PWR A(C) GND -12V PWR A(C)

28 VOLTS = OPEN
0 VOLTS = CLOSE

PEV 1 PEV 2 PEV 3 PEV 4 PEV 5 PEV 6

PEV 1_PWR PEV 2_PWR PEV 3_PWR PEV 4_PWR PEV 5_PWR PEV 6_PWR

PEV OPEN (1-6)

OS - ONE SHOT
SYS_RES - SYSTEM RESET
BITE - BUILT IN TEST EQUIPMENT
POR - POWER-ON-RESET
DIS_START - DISABLE START
BUSRSD - HALT - BUFFER SEQUENCE HALT
TIM - TIME SIGNAL FROM DECODER

NORMSEQ_HALT (BURNSEQ_HALT)

NORMSEQ_SET

NORMSEQ_RESET

BURNSEQ_SET

BURNSEQ_RESET

HALT_LOW (FLT1+)

FAULT (FLT1+)

INHIBIT (FLT1+)

STARTUP COUNTER/ DECODER

NORMAL STATES COUNTER/ DECODER

OUTPUT/ DECODER

STATE 0 STATE 1 STATE 2 STATE 3 STATE 4 STATE 5 STATE 6 STATE 7 STATE 8 STATE 9 STATE 10 STATE 11 STATE 12 STATE 13 STATE 14 STATE 15 STATE 16 STATE 17 STATE 18 STATE 19 STATE 20

STATE S0 STATE S1 STATE S2 STATE S3

TIM1 TIM2 TIM3 TIM4 TIM5 TIM6 TIM7 TIM8 TIM9 TIM10

IHZ_CLK

6 SEC CLK

AC BUS ENABLE

DC1 BUS ENABLE

DC2 BUS ENABLE

ACTUATOR BUS ENABLE

ACTUATOR A,B (CW + CCW)

FAN ON

COMPRESSOR ON

ACTUATOR BUS ENABLE

DCI BUS ENABLE

DC2 BUS ENABLE

AC BUS ENABLE

ONE OF FOUR SIGNALS (ACTIVE)

FAN 0A FAN 0B FAN 0C

3Φ POWER TO FAN

SSR5 SSR6 SSR7 SSR8 SSR9 SSR10

3Φ POWER TO COMPRESSOR

COMP 0A COMP 0B COMP 0C

COMPRESSOR FAN

DC POWER TO TRANSDUCER

ACT A CW (OP) ACT A CCW (CL) ACT B CCW (CL) ACT B CW (OP)

ACTUATOR BUS RELAY

SSR1 SSR2 SSR3 SSR4

A CW (OP) A CCW (CL) B CCW (CL) B CW (OP)

CNTRL 2 VOUCER POWER

BED A CW (OP) BED A CCW (CL) BED B CCW (CL) BED B CW (OP)

BED A BED B

±12VDC

COMP RPM

VALVE POSITION INDICATORS

PPCO2

VACUUM PRESSURE

TEMPERATURE

FILTER ΔP

BED ΔP PRESS

BED A PRESS

BED B PRESS

+12V PWR A(C)

P1 P2 P3 P4 P5 P6 P7 P8 P9

J1 J2 J3 J4 J5 J6 J7 J8 J9

DATE: 03/04/96 | NAME: MDU | VERSION: INK 7

STATE LOGIC TABLE

STATE NUMBER	STATE DESCRIPTION	VACUUM CYCLE VALVE ACTUATORS COMMANDS				PRESSURE EQUALIZATION VALVES						PRESSURE SENSORS		FAN	COMP	TIME		DELTA TIME
		A CV	A CCV	B CV	B CCV	PEV1	PEV2	PEV3	PEV4	PEV5	PEV6	PS-A	PS-B			START	FINISH	
S0	START					CL	CL	CL	CL	CL	CL	---	---	OFF	OFF	00H 00	00H 06	00H 06
S1	ISOLATE BEDS		X		X	CL	CL	CL	CL	CL	CL	---	---	OFF	OFF	00H 06	00H 12	00H 06
S1D	✓ POPPETS CLOSED					CL	CL	CL	CL	CL	CL	---	---	OFF	OFF	00H 12	00H 13	00H 01
S2	PURGE BED A					OPEN	CL	CL	CL	CL	CL	0.0	---	OFF	OFF	00H 13	02H 06	01H 53
S2D	✓ EQUALIZE VALVE PRESSURE					CL	CL	CL	CL	CL	CL	0.0	---	OFF	OFF	02H 06	02H 07	00H 01
S3	EQUALIZE VALVE PRESSURE					CL	CL	OPEN	OPEN	CL	CL	14.7	0.0	ON	OFF	02H 07	02H 48	00H 41
1	OPEN VACUUM CYCLE VALVES	X				CL	CL	CL	CL	CL	CL	14.7	0.0	ON	OFF	00H 00	00H 06	00H 06
2	ADSORB A, REGEN BED B					CL	CL	CL	CL	CL	CL	14.7	0.0	ON	OFF	00H 06	11H 00	10H 54
3	ISOLATE BEDS		X			CL	CL	CL	CL	CL	CL	14.7	0.0	ON	OFF	11H 00	11H 06	00H 06
4	ULLAGE SAVE BED A					CL	OPEN	CL	CL	CL	CL	3.0	0.0	ON	ON	11H 06	12H 21	01H 15
4D	✓ ULLAGE SAVE					CL	OPEN	CL	CL	CL	CL	3.0	0.0	ON	OFF	12H 21	12H 22	00H 01
5	EQUALIZE BED PRESSURE					CL	OPEN	CL	CL	OPEN	CL	1.5	1.5	ON	OFF	12H 22	12H 28	00H 06
5D	✓ BED EQUALIZATION					CL	CL	CL	CL	CL	CL	1.5	1.5	ON	OFF	12H 28	12H 29	00H 01
6	EQUALIZE VALVE PRESSURE					OPEN	CL	CL	CL	CL	OPEN	0.0	14.7	ON	OFF	12H 29	12H 59	00H 30
6D	✓ AIR POPPET EQUAL					CL	CL	CL	CL	CL	CL	0.0	14.7	ON	OFF	12H 59	13H 00	00H 01
7	OPEN VACUUM CYCLE VALVES			X		CL	CL	CL	CL	CL	CL	0.0	14.7	ON	OFF	13H 00	13H 06	00H 06
8	ADSORB B, REGEN BED A					CL	CL	CL	CL	CL	CL	0.0	14.7	ON	OFF	13H 06	24H 00	10H 54
9	ISOLATE BEDS				X	CL	CL	CL	CL	CL	CL	0.0	14.7	ON	OFF	24H 00	24H 06	00H 06
10	ULLAGE SAVE BED B					CL	CL	CL	CL	OPEN	CL	0.0	3.0	ON	ON	24H 06	25H 21	01H 15
10D	✓ ULLAGE SAVE					CL	CL	CL	CL	OPEN	CL	0.0	3.0	ON	OFF	25H 21	25H 22	00H 01
11	EQUALIZE BED PRESSURE					CL	CL	CL	CL	OPEN	CL	1.5	1.5	ON	OFF	25H 22	25H 28	00H 06
11D	✓ BED EQUALIZATION					CL	CL	CL	CL	CL	CL	1.5	1.5	ON	OFF	25H 28	25H 29	00H 01
12	EQUALIZE VALVE PRESSURE					CL	CL	OPEN	OPEN	CL	CL	14.7	0.0	ON	OFF	25H 29	25H 59	00H 30
12D	✓ AIR POPPET EQUAL					CL	CL	CL	CL	CL	CL	14.7	0.0	ON	OFF	25H 59	26H 00	00H 01

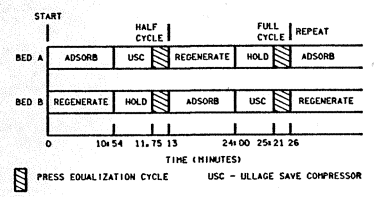

CIRCUIT ACRONYMS

OS - ONE SHOT
SYS_RES - SYSTEM RESET
POR - POWER-ON-RESET
BITE - BUILT IN TEST EQUIPMENT
DIS_START - DISABLE START
BUFMSEQ - HALT - BUFFER SEQUENCE HALT
TIM - TIME SIGNAL FROM DECODER

DATE: 10/29/91	NAME: VSH	VERSION: INK, 2
DATE: 11/04/91	NAME: BJT	VERSION: INK, 3
DATE: 11/19/91	NAME: PSD	VERSION: INK, 4

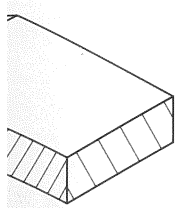

REDUNDANTLY POWERED VALVES 28VDC (28 WATTS/VALVE)

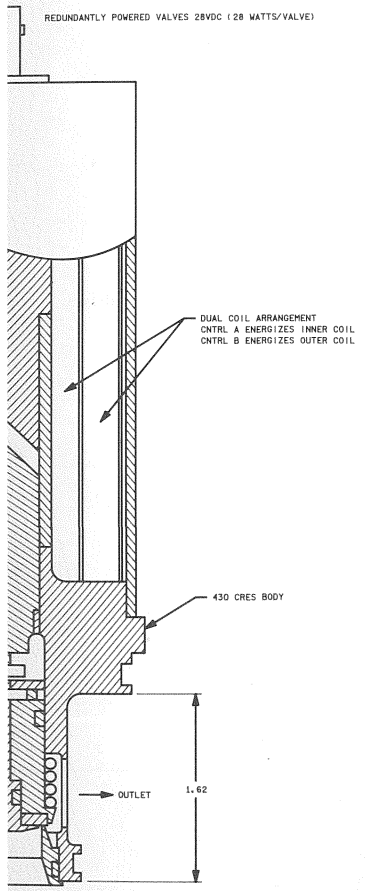

PEV MODULE MANIFOLD PROVIDES 50 MESH DISC-TYPE FILTER

ION VALVE (PEV)

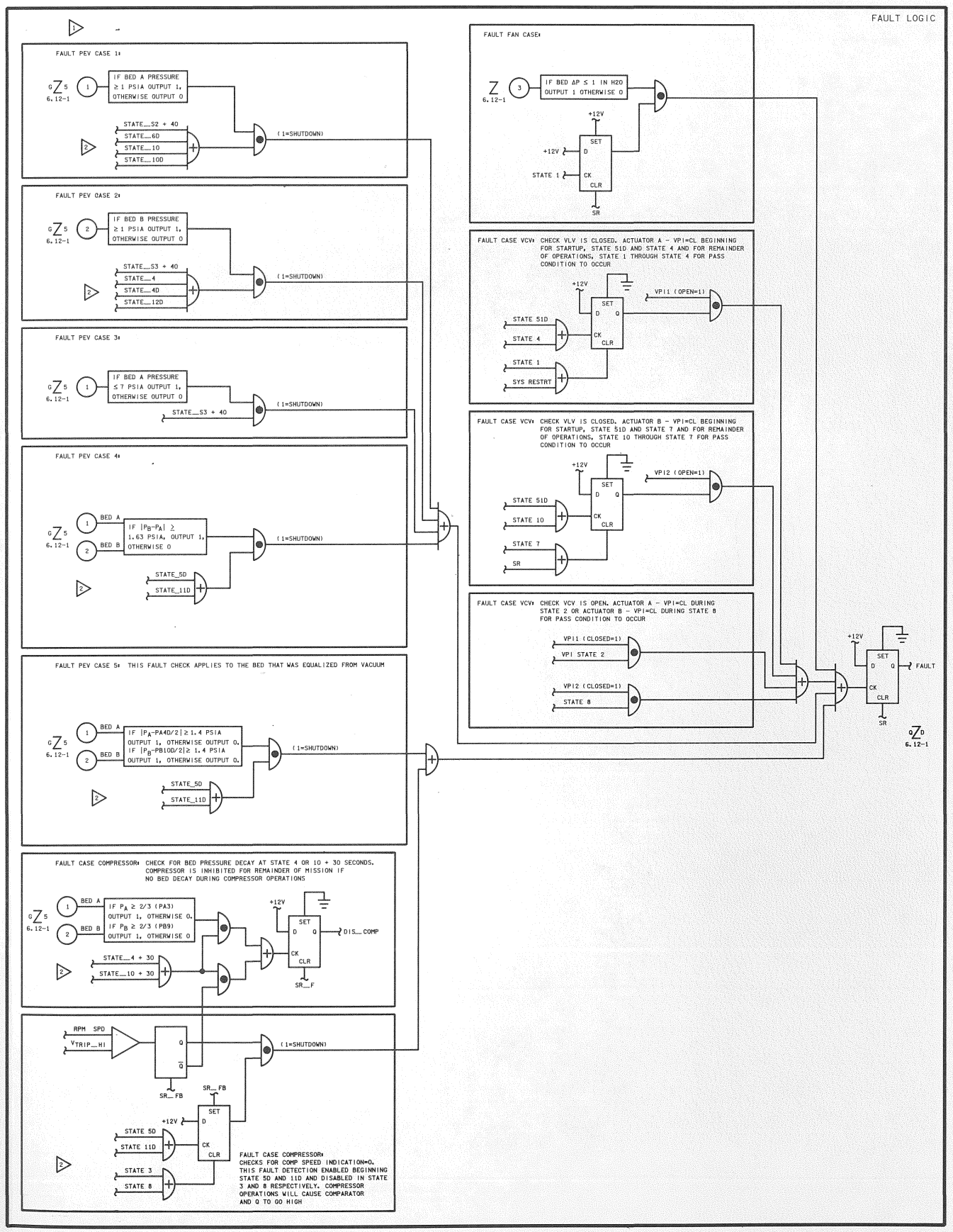

STATE NUMBER	STATE DESCRIPTION	VACUUM	CYCLE	VALVE	ACTUATORS	PRESSURE EQUALIZATION VALVES						PRESSURE SENSORS		FAN	COMP	TIME		DELTA TIME	SYSTEM CYCLE TIME	NEXT STATE
		A CW	A CCW	B CW	B CCW	PEV1	PEV2	PEV3	PEV4	PEV5	PEV6	PS-A	PS-B			START	FINISH			
S1	ISOLATE BEDS		X		X	CL	CL	CL	CL	CL	CL	----	----	OFF	OFF	00:00	00:06	----	----	S1D
S1D	----------					CL	CL	CL	CL	CL	CL	----	----	OFF	OFF	00:06	00:07	----	----	S2
S2	PURGE BED A					OPEN	CL	CL	CL	CL	CL	0.0	----	OFF	OFF	00:07	02:00	----	----	S2D
S2D						CL	CL	CL	CL	CL	CL	0.0	----	OFF	OFF	02:00	02:01	----	----	S3
S3	EQUALIZE VALVE PRESSURE					CL	CL	OPEN	OPEN	CL	CL	14.7	0.0	ON	OFF	02:01	02:42	----	----	1
1	OPEN VACUUM CYCLE VALVES	X				CL	CL	CL	CL	CL	CL	14.7	0.0	ON	OFF	00:00	00:06	00:06	00:06	2
2	ADSORB A, REGEN BED B					CL	CL	CL	CL	CL	CL	14.7	0.0	ON	OFF	00:06	13:00	12:54	13:00	3
3	ISOLATE BEDS		X			CL	CL	CL	CL	CL	CL	14.7	0.0	ON	OFF	13:00	13:06	00:06	13:06	4
4	ULLAGE SAVE BED A					CL	OPEN	CL	CL	CL	CL	3.0	0.0	ON	ON	13:06	14:21	01:15	14:21	4D
4D	----------					CL	OPEN	CL	CL	CL	CL	3.0	0.0	ON	OFF	14:21	14:22	00:01	14:22	5
5	EQUALIZE BED PRESSURE					CL	OPEN	CL	CL	OPEN	CL	1.5	1.5	ON	OFF	14:22	14:28	00:06	14:28	5D
5D	----------					CL	CL	CL	CL	CL	CL	1.5	1.5	ON	OFF	14:28	14:29	00:01	14:29	6
6	EQUALIZE VALVE PRESSURE					OPEN	CL	CL	CL	CL	OPEN	0.0	14.7	ON	OFF	14:29	14:59	00:30	14:59	6D
6D	----------					CL	CL	CL	CL	CL	CL	0.0	14.7	ON	OFF	14:59	15:00	00:01	15:00	7
7	OPEN VACUUM CYCLE VALVES			X		CL	CL	CL	CL	CL	CL	0.0	14.7	ON	OFF	15:00	15:06	00:06	00:06	8
8	ADSORB A, REGEN BED B					CL	CL	CL	CL	CL	CL	0.0	14.7	ON	OFF	15:06	28:00	12:54	13:00	9
9	ISOLATE BEDS				X	CL	CL	CL	CL	CL	CL	0.0	14.7	ON	OFF	28:00	28:06	00:06	13:06	10
10	ULLAGE SAVE BED B					CL	CL	CL	CL	OPEN	CL	0.0	3.0	ON	ON	28:06	29:21	01:15	14:21	10D
10D	----------					CL	CL	CL	CL	OPEN	CL	0.0	3.0	ON	OFF	29:21	29:22	00:01	14:22	11
11	EQUALIZE BED PRESSURE					CL	OPEN	CL	CL	OPEN	CL	1.5	1.5	ON	OFF	29:22	29:28	00:06	14:28	11D
11D	----------					CL	CL	CL	CL	CL	CL	1.5	1.5	ON	OFF	29:28	29:29	00:01	14:29	12
12	EQUALIZE VALVE PRESSURE					CL	CL	OPEN	OPEN	CL	CL	14.7	0.0	ON	OFF	29:29	29:59	00:30	14:59	12D
12D	----------					CL	CL	CL	CL	CL	CL	14.7	0.0	ON	OFF	29:59	30:00	00:01	15:00	1

*NOTE: SOLENOID VALVE REMAINS OPEN THROUGHOUT STATE

2 THE BED PRESSURE USED, IS AT THE SAME STATE NUMBER BEING CHECKED BY THE FAULT LOGIC

NOTES: 1 FOR DETAILED COMPONENT LOGIC REFER TO UNITED TECHNOLOGY HAMILTON STANDARD DRAWINGS 5VSK117846-898

12 RCRS MECH/FAULT LOGIC 2

SIGNATURE		DATE	NATIONAL AERONAUTICS AND SPACE ADMINISTRATION LYNDON B. JOHNSON SPACE CENTER HOUSTON, TEXAS
DSGN	B. J. TEDDER JR.	9/28/90	
DR	S. B. EGAN-WYER	9/28/90	
ENGR	JIM SPIVEY		RCRS MECHANICAL/FAULT LOGIC
ENGR		11-15-91	
APP		11-18-91	
APP			SPACE SHUTTLE / DWG NO 6.12
OMNIPLAN	S.K. Konstad 11.19.91		ALL
LTR E	PCN 1		126.5 X 34 / PAGE SHEET 2 OF 2

BASIC REV E-1

T | S | R | Q | P | O | N | M | L | K | J

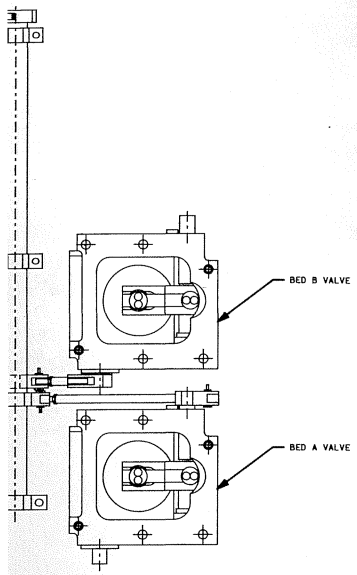

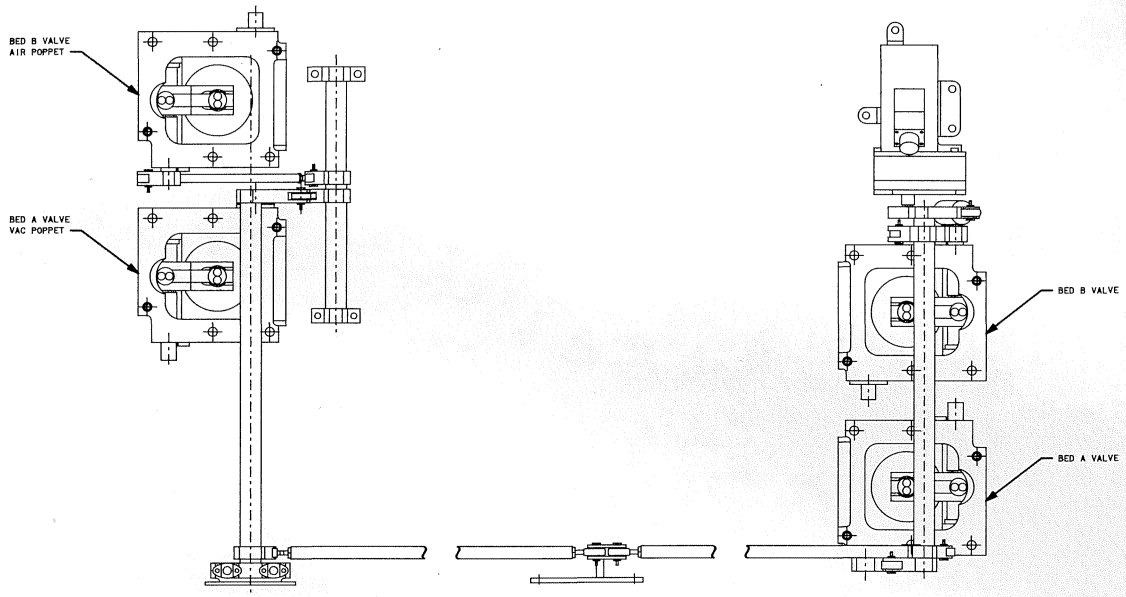

TOP VIEW
ACTUATOR B, DRIVES:
BED A VACUUM POPPETS
BED B AIR POPPETS

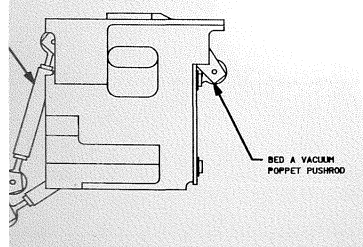

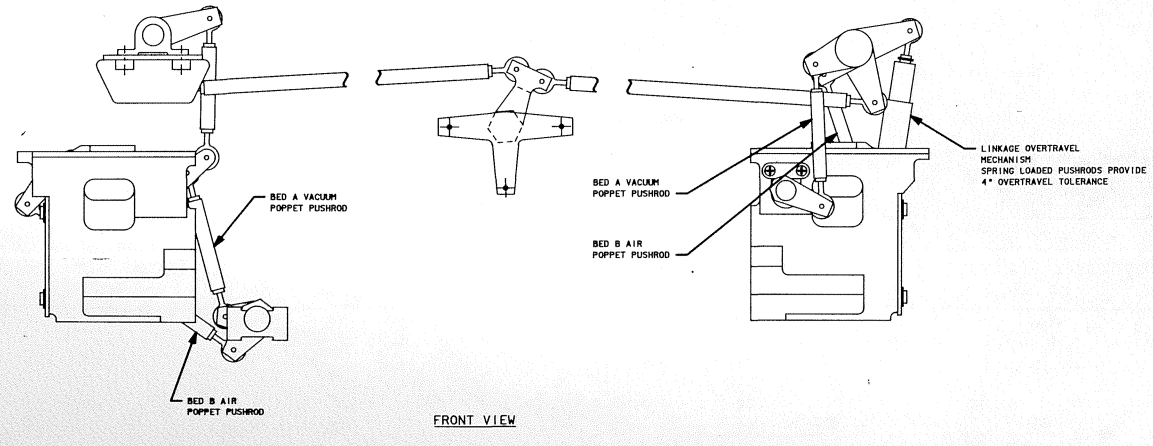

FRONT VIEW

MECHANICAL LINKAGE

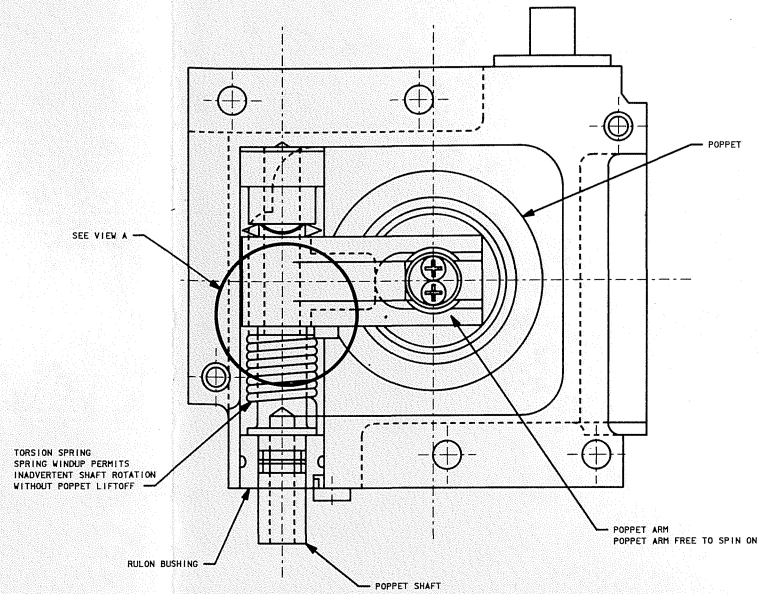

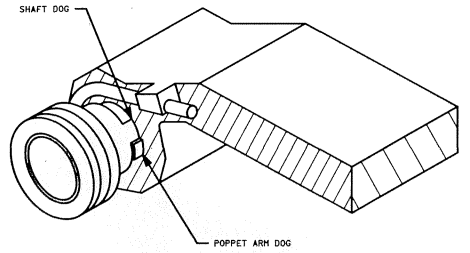

VIEW A

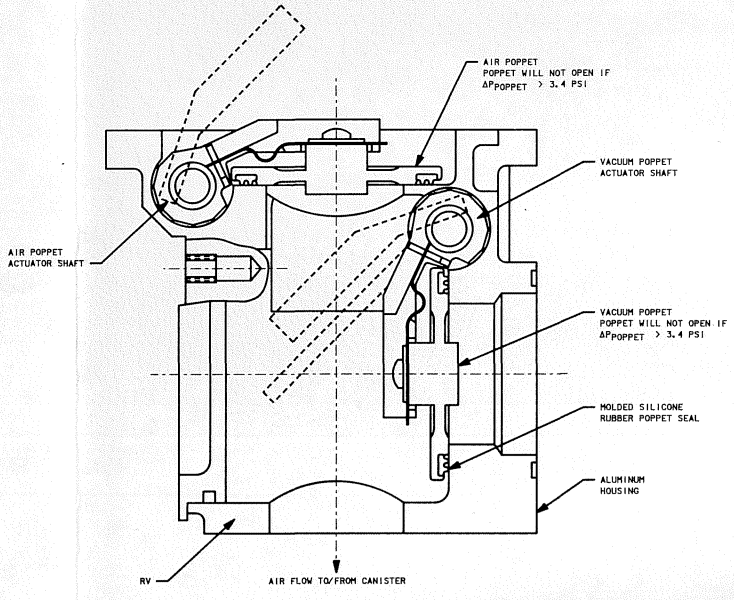

VACUUM CYCLE VALVE (VCV)

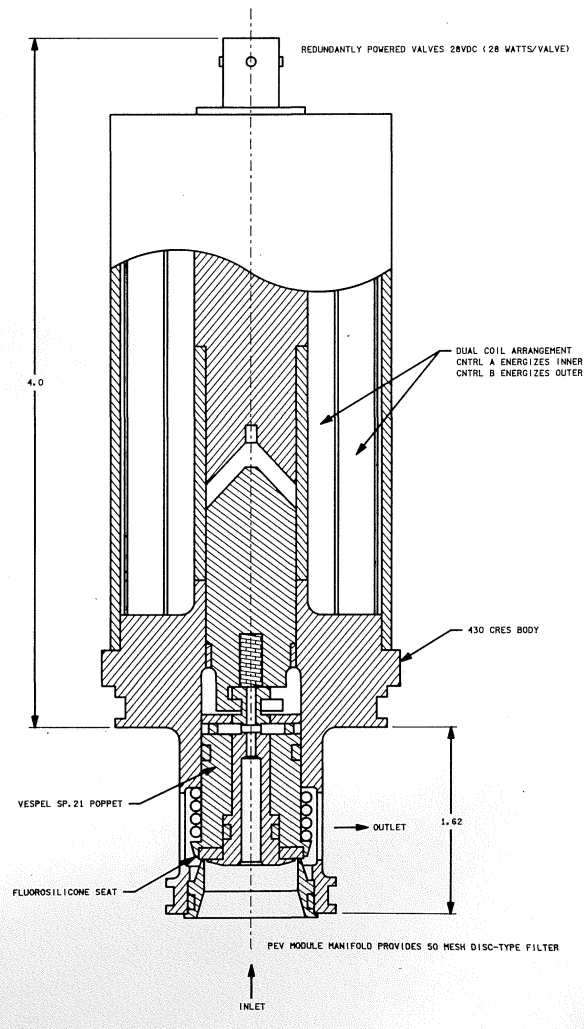

PRESSURE EQUALIZATION VALVE (PEV)

DATE: 11/19/91 | NAME: PSD | VERSION: INV.4

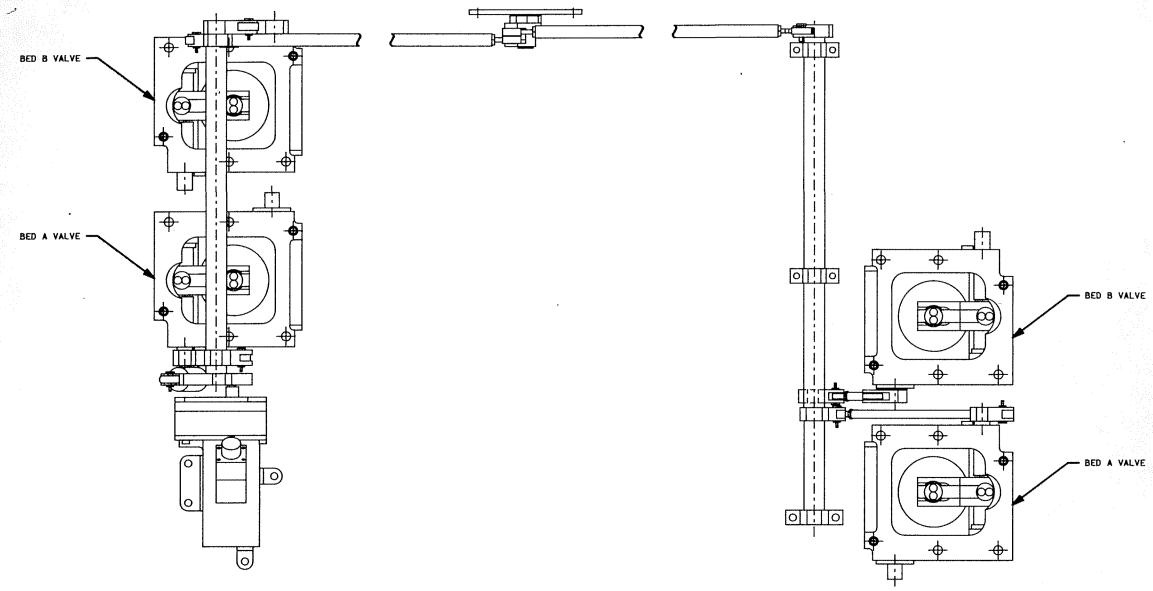

TOP VIEW
ACTUATOR A, DRIVES:
BED B VACUUM POPPETS
BED A AIR POPPETS

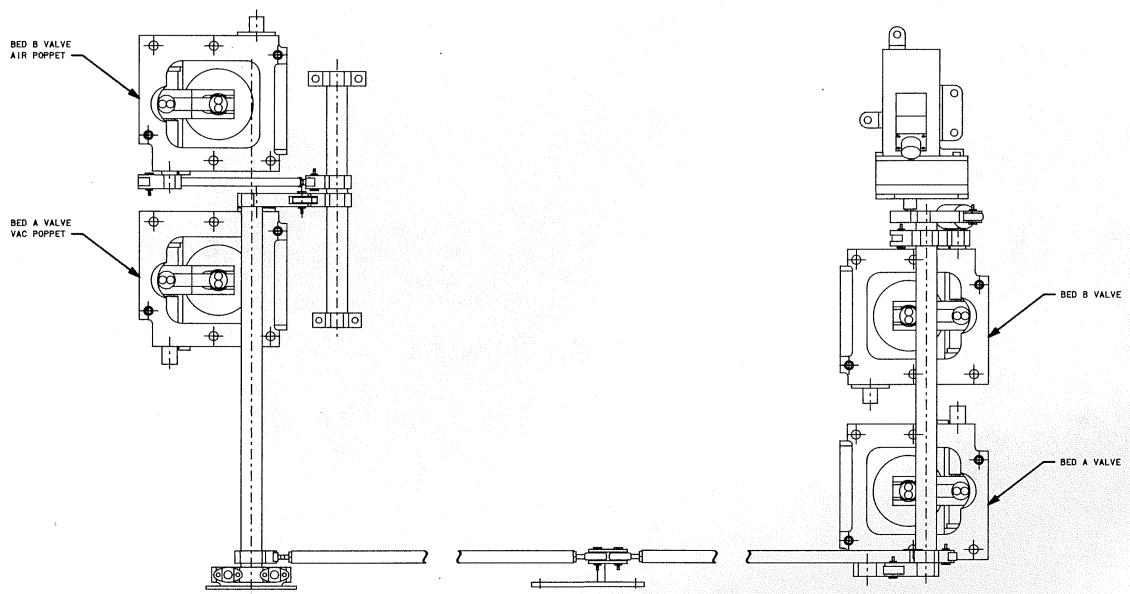

TOP VIEW
ACTUATOR B, DRIVES:
BED A VACUUM POPPETS
BED B AIR POPPETS

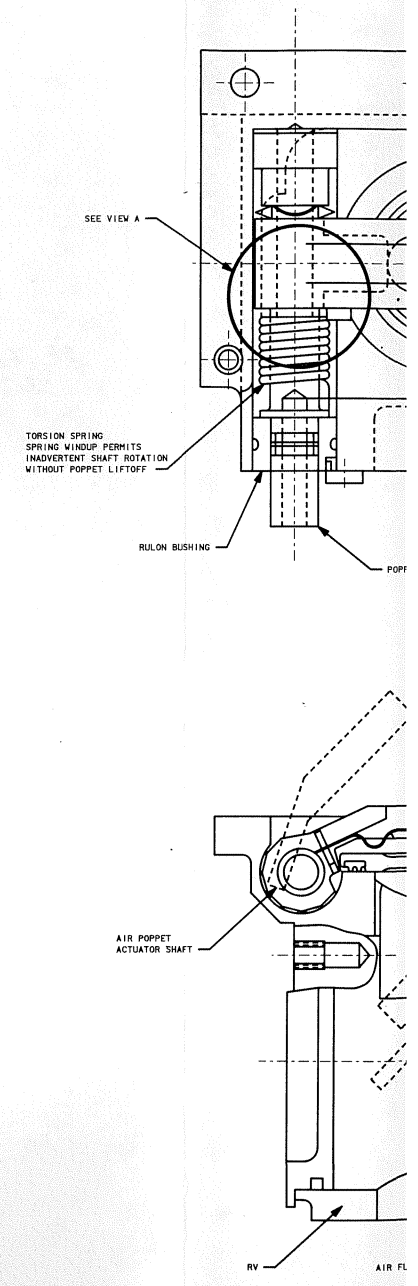

VACUUM

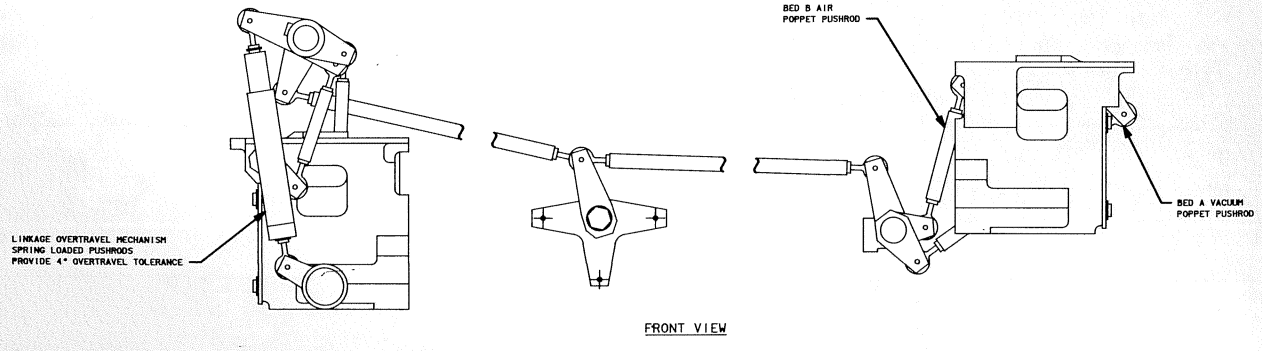

FRONT VIEW

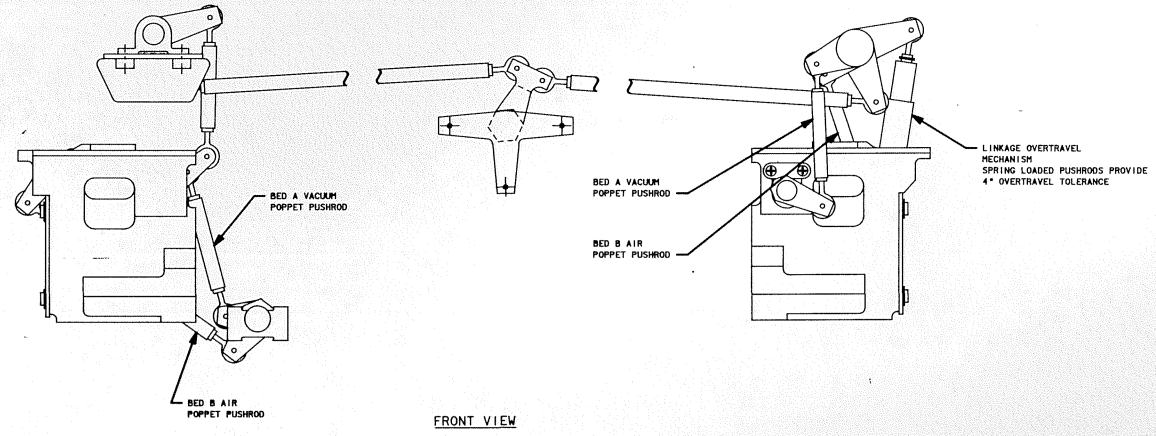

FRONT VIEW

MECHANICAL LINKAGE

BASIC REV E-1

DATE: 05/25/93	NAME: VEM	VERSION: INK: 4
DATE: 08/18/93	NAME: BJB	VERSION: BPT: 6
DATE: 08/30/93	NAME: VEM	VERSION: INK: 5

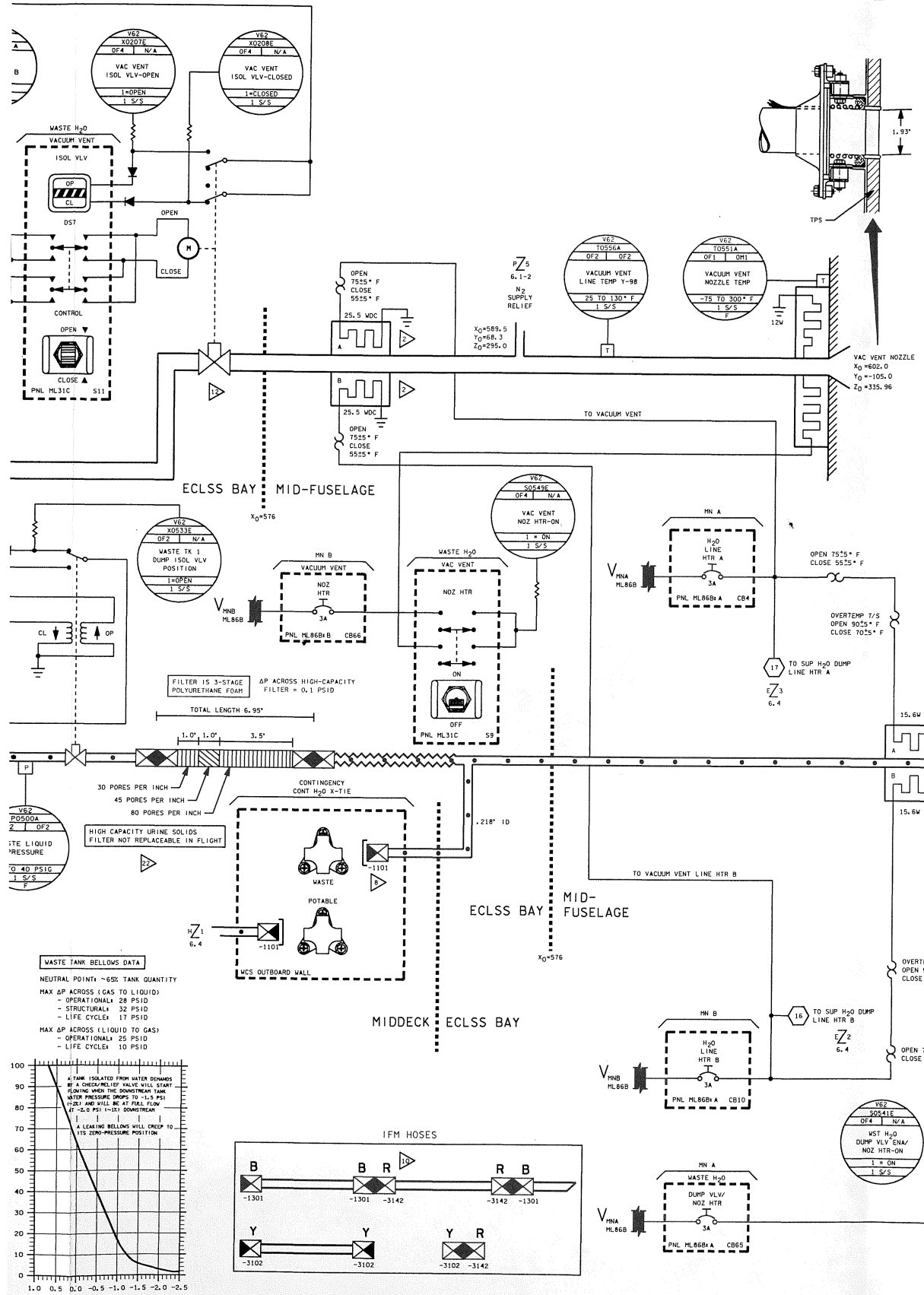

WASTE TANK BELLOWS DATA

NEUTRAL POINT: ~65% TANK QUANTITY

MAX ΔP ACROSS (GAS TO LIQUID)
- OPERATIONAL: 28 PSID
- STRUCTURAL: 32 PSID
- LIFE CYCLE: 17 PSID

MAX ΔP ACROSS (LIQUID TO GAS)
- OPERATIONAL: 25 PSID
- LIFE CYCLE: 10 PSID

WATER TANK BELLOWS EFFECT ON WATER PRESSURE

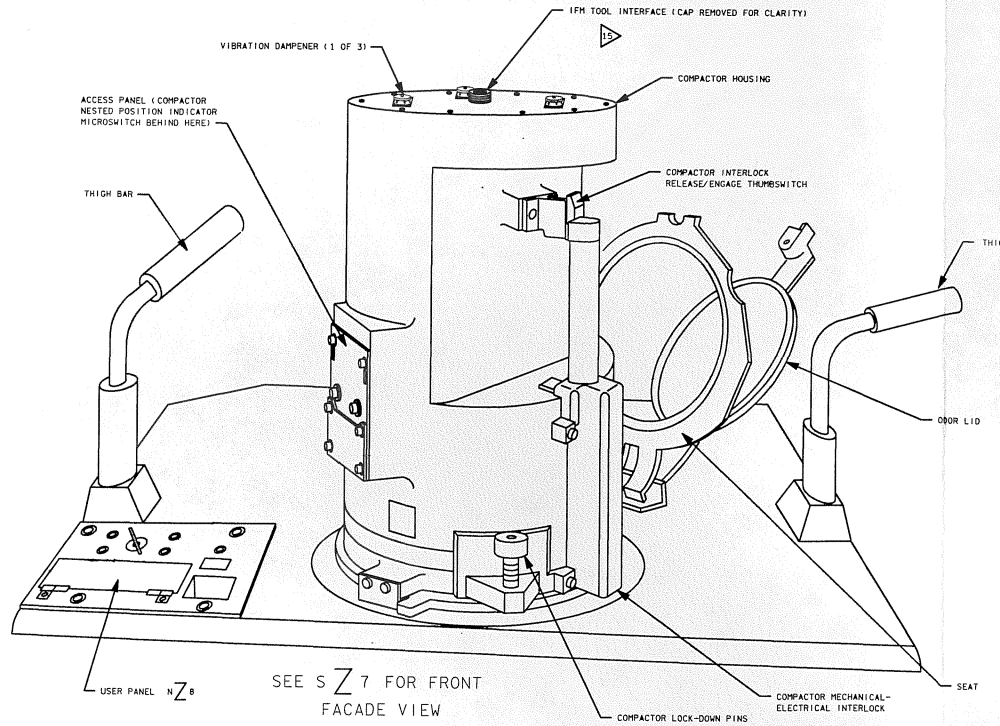

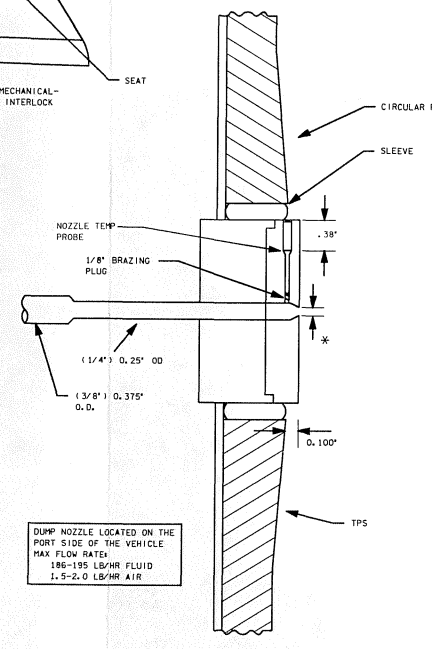

* ACTUAL NOZZLE DIAMETER (ALL VEH)

	OV-102	OV-103	OV-104	OV-105
WASTE DUMP NOZZLE	0.0565"	0.056"	0.0555"	0.06" (EST)

TYPICAL LOADING FOR 16 + 2 DAYS (7 PERSON)		
ITEMS	TOTAL	NO. TO BE STOWED
CANISTERS	6	4
CANISTER LIDS	5	5
LID DISPENSERS	10	2
BAG DISPENSERS	10	10
PREFILTERS	36	36
URINE O/B FILTERS	2	1
COMMODE O/B FILTERS	2	1
MALE FUNNELS	5	5
FEMALE FUNNELS	2	2
PLENUM FILTER	2	1

EDO WCS CONSUMABLES

(23) PNL ML86B NOMENCLATURE
OV-105/104 WCS CNTLR (CB19 AND CB22) 5 AMPS
OV-103 CB 19 WCS CNTLR/SLINGER 5 AMPS
CB 22 WCS CNTLR 3 AMPS
OV-102 CB 19 WCS CNTLR 5 AMPS
CB 22 WCS CNTRL 5 AMPS

(22) A SPARE URINE SOLIDS FILTER IS CARRIED EACH FLIGHT. IT IS NOT A REPLACEMENT FOR THE INSTALLED DUMP LINE FILTER. SPARE FILTER IS DESIGNED TO BE UTILIZED IN COMBINATION WITH THE IFM Y-Y HOSE (SEE (10)), THROUGH THE CONTINGENCY CROSS-TIE WASTE Q.D.

(21) ELBOW FITTING FROM BAG INSIDE COMPARTMENT IS CONNECTED (FRICTION FIT) TO TYGON TUBING WHICH LEADS TO VAC VENT CONNECTION

(20) VOL F WET TRASH COMPARTMENT LINE FITTING IS AN AN (ARMY-NAVY) TYPE

(19) VACUUM VENT/WET TRASH ORIFICES ARE PART OF EACH WCS. ONLY THE EDO WCS HAS THIS LOWER FLOW RATE ORIFICE

(18) ΔP TYPICALLY ~1.04" H_2O IN FLIGHT (STS-54) DATA AT 14.7 PSIA CABIN CONDITIONS

(17) SEP SPEED TYPICALLY ~3650 RPM IN FLIGHT (STS-54) DATA

(16) LION BOX MODIFIED TO HOLD NINE LIOH CANS PLUS WET TRASH STOWAGE. SCARRED ON OV-102, 104, 105. MISSION DEPENDENT CONFIGURATION

(15) IFM TOOL (POWER SCREWDRIVER OR ROBBINS WRENCH, WITH 1/4" TO 3/8" ADAPTER) FITS HERE. SEVENTY-TWO TURNS REQUIRED FOR EITHER DOWNWARD (CW-COMPACT) OR UPWARD (CCW-RETRACT) PISTON MOTION

(14) SERVICE CANISTER LED IS RESET AFTER CHANGEOUT BY RESET SWITCH UNDER WCS FACADE. THIS SWITCH ALSO FUNCTIONS AS THE USER PANEL FAULT LIGHT "PUSH TO TEST" SWITCH

(13) UMS OPS - UDV MUST BE IN SEP 2 POSITION AND URINE SEL SW TO SEP 2. THE UMS ELECTRICAL CONNECTOR ON THE WCS USER PANEL WORKS IN TANDEM WITH SEP 2. THE UDV WILL PREVENT BACKFLOW THROUGH THE UNUSED SEPARATOR

(12) VAC VENT ISOL VLV ORIFICE IN VLV PLATE
FLOW: 3.0±0.25 LBS/HR AT 14.7 PSIA INLET PRESSURE
AND A DELTA P OF 6.7 PSID
ORIFICE DIA: 0.0635 TO 0.0638 INCHES
DISCHARGE COEFF.: (C_d): 0.8
KSC TESTING: 4.37±0.36 LBS/HR AT 6.7 PSID

(11) RESERVED

(10) IFM HOSES
- DIMENSIONS/MATERIAL
  - BLUE/BLUE - 10 FT
  - RED/RED - 10 FT
  - YELLOW/YELLOW - 8 FT
  - MATERIAL - TEFLON
  - DIAMETER - 1/4 IN OD
- FREE FLUID NOZZLE (NOT SHOWN)
  LENGTH = ~13 5/8"
- STOWED IN CONTINGENCY HOSE AND CABLE KIT

QD COMPATIBILITY	
-1101	-3102
-1141	-3142
-1201	-3142, -3302
-1301	-3142, -3302

(9) TRASH CAN AND HOSES INSTALLED DURING POST INSERTION AND STOWED DURING DEORBIT PREP

(8) ALLOWS WASTE TANK TO BE SUPPLIED TO FES IN A CONTINGENCY BY CONNECTING WASTE H2O QD TO SUPPLY H2O QD. ALSO ALLOWS DUMP NOZZLES TO BE CROSS-TIED SEE ((10)), AND PERMITS CONTINGENCY WATER CONTAINER (CWC) TO BE USED IN THE EVENT OF A WASTE TANK LEAK

(7) 1μ HYDROPHOBIC FILTER PRECLUDES WATER FROM EXITING TANK TO N_2 SUPPLY LINES IN EVENT OF BELLOWS LEAK, BUT WATER WILL BREAK THROUGH THE HYDROPHOBIC FILTER IF THE PRESSURE IS 5 PSID ACROSS IT

(6) AIR OUTLET CABIN ODOR/BACTERIA FILTER CAN BE CHANGED IN FLIGHT (ONLY NECESSARY EVERY 30 DAYS) BUT ONLY ONE SPARE IS CARRIED ONBOARD. THE COMMODE AND URINAL FILTERS CANNOT BE INTERCHANGED

(5) NOMINAL COMPACTOR LOAD CURRENT ≈ 100 LBF
COMPACTOR FAULT CURRENT ≈ 125 LBF
IF FAULT LIGHT IS ON, THE READY TO COMPACT LED WILL REMAIN OFF

(4) RESERVED

3. REFER TO TABLE 6.1 FOR DRAWING REFERENCES

(2) THE A AND B (REDUNDANT) LINE HEATERS ARE CONTINUOUSLY WRAPPED TOGETHER THE FULL LENGTH OF THE LINE FROM X_0 = 576

NOTES: (1) WASTE WATER STORAGE TANK
- USABLE CAPACITY: 165 LBS
- LENGTH: 35.5 IN
- DIAMETER: 15.5 IN
- DRY WEIGHT: 39.5 LBS

* 13 EDO WMS

SIGNATURE	DATE	NATIONAL AERONAUTICS AND SPACE ADMINISTRATION LYNDON B. JOHNSON SPACE CENTER HOUSTON, TEXAS
DSGN L. DUMIS	10/10/78	
DR		
ENGR S. TRIPODI		EDO WASTE MANAGEMENT
ENGR	9/13/78	
APP	9/14/78	
APP		SPACE SHUTTLE
CADS S.K. Contreras	10-5-93	OV 105

DWG NO 6.13

LTR E PCN 3 126.5 X 34 PAGE SHEET 1 OF 3

BASIC REV E-3

T S R Q P O N M L K J

SEE E Z 8 FOR TOP VIEW

TAB

CANISTER RESET

RESET TEST

LIGHT TEST

AIR DIVERTER VALVE

CAN

AUX WET TRASH

UMS INTFC

URINE DIVERTER VALVE

FOOT RESTRAINT

WCS VACUUM VALVE

CLOSED

OPEN

VACUUM VENT 60 WATTS/120

WASTE CANISTER

FOOT/TOE RESTRAINTS

EDO WCS FRONT VIEW

MN A

WCS CNTLR

5A

PNL ML86B CB19

NOTE: CB RATING AND NOMENCLATURE ARE VEHICLE DEPENDENT. SEE

AC 1

WCS FAN SEP 1

ΦA 3A PNL MA73C E CB47

ΦB 3A PNL MA73C E CB48

ΦC 3A PNL MA73C E CB49

MN B

WCS CNTLR

5A

PNL ML86B CB22

NOTE: CB RATING AND NOMENCLATURE ARE VEHICLE DEPENDENT. SEE

AC 2

WCS FAN SEP 2

ΦA 3A PNL MA73C E CB50

ΦB 3A PNL MA73C E CB51

ΦC 3A PNL MA73C E CB52

+28 VOLT DC POWER TO COMPACTOR MOTOR (MN-A OR MN-B)

WCS CONTROLLER (SEE DRAWING NO. 6.13-2 & 3)

USER PANEL Z6

URINAL

READY

FAULT

COMMODE

SERVICE CANISTER

READY TO COMPACT

FAULT

COMPACT

URINAL SEL SEP 1 / SEP 2

WCS PWR SEL AUTO 1 / OFF 1 / OFF 2 / AUTO 2 / MAN 1 / MAN 2

FAN PWR FAN 1 / AUTO / FAN 2

CAUTION

VERIFY CORRECT URINE DIVERTER VALVE CONFIGURATION PRIOR TO SELECTING ALTERNATE URINAL

USER PANEL IS LOCATED ON TOP OF WCS, ADJACENT TO COMMODE, ON SEATED USER'S RIGHT-HAND SIDE

NOTE: HINGED DOOR FOR SWITCH ACCESS - SHOWN IN 'OPEN' POSITION

WCS VACUUM VALVE

CLOSED

OPEN

PNL WCS

.944" ID

MIDDECK

ECLSS BAY

LENGTH BETWEEN VACUUM VALVE AND VACUUM VENT ISOL VALVE IS 20 FEET 1.93" ID

Z7 6.3-1 AIRLOCK VENT 1.93" ID

(EDO OV-102 AND OV-105 ONLY) RCRS Z1 6.12-1 1.93" ID

Z7 6.4 H2 SEPARATOR OVERBOARD VENT .218" ID

H2 FLOW = 6 SCIM OR 10 SCCM

MN A VAC VENT ISOL VLV 3A PNL ML86B B CB67

MN B VAC VENT ISOL VLV 3A PNL ML86B B CB68

V62 S0205E OF4 N/A VAC VENT ISOL VLV-MN A 1=MN A 1 S/S

V62 S0206E OF4 N/A VAC VENT ISOL VLV-MN B 1=MN B 1 S/S

V62 X0207E OF4 N/A VAC VENT ISOL VLV-OPEN 1=OPEN 1 S/S

V62 X0208E OF4 N/A VAC VENT ISOL VLV-CL 1=CLOSE 1 S/S

WASTE H2O VACUUM VENT ISOL VLV

BUS SELECT MN A MN B PNL ML31C S10

WASTE H2O VACUUM VENT ISOL VLV OP CL DS7 OPEN CLOSE M

CONTROL OPEN CLOSE PNL ML31C S11

ECLSS BAY

XO=57

VACUUM VENT 3 LB/HR AT 14.7 PSIA -1101 PNL WCS TP 126 Z6

2.2 LB/DAY AT 14.7 PSIA

LIOH BOX AUX WET TRASH

2.2 LB/DAY AT 14.7 PSIA

WMC WET TRASH 8 FT3 VOL. F

CABIN AIR

OUTBOARD (PORT) SIDE OF WMS COMPARTMENT

AUX WMC (WET TRASH) 3 FT3

CABIN AIR

FLUSH

ECLS H2O SYSTEM FWD FUSELAGE

ARS CONDENSATE Z1 6.2

.218" ID

.343" ID

.343" ID

MN A WASTE H2O DUMP ISOL 3A PNL ML86B B CB17

WASTE H2O DUMP ISOL VLV OP CL DS3 OPEN CLOSE PNL ML31C S3

V62 X0533E OF2 N/A WASTE TK 1 DUMP ISOL VLV POSITION 1=OPEN 1 S/S

FILTER IS 3-STAGE POLYURETHANE FOAM

TOTAL LENGTH 6.95"

1.0" 1.0" 3.5"

30 PORES PER INCH

45 PORES PER INCH

80 PORES PER INCH

HIGH CAPACITY URINE SOLIDS FILTER NOT REPLACEABLE IN FLIGHT

V62 P0560A OF2 OF2 WASTE LIQUID PRESSURE 0 TO 40 PSIG 1 S/S P

V62 X0570E OF1 N/A WASTE TK 1 INLET VALVE POSITION 1=OPEN 1 S/S

WASTE H2O TANK 1 VLV OP CL DS2 OPEN CLOSE PNL ML31C S2

MN A WASTE H2O TK 1 VALVE 3A PNL ML86B B CB16

V62 Q0540A OF1 OF1 WASTE WATER TANK QUANTITY 0 TO 100 PCT 1 S/S P

WASTE TANK 1

0.25 IN

FROM H2O PRESSURIZATION MANIFOLD

WASTE H2O TANK 1 DRAIN VLV OP CL DS1 OPEN CLOSE PNL ML31C S1

MN B WASTE H2O TK 1 DRAIN 3A PNL ML86B B CB23

V62 X0566E OF2 N/A WASTE TK 1 DRAIN VALVE POSITION 1=OPEN 1 S/S

ECLS H2O SYSTEM FWD FUSELAGE G-13

GSE DRAIN

WASTE TANK BELLOWS DATA

NEUTRAL POINT: ~65% TANK QUANTITY

MAX ΔP ACROSS (GAS TO LIQUID)
- OPERATIONAL: 28 PSID
- STRUCTURAL: 32 PSID
- LIFE CYCLES: 17 PSID

MAX ΔP ACROSS (LIQUID TO GAS)
- OPERATIONAL: 25 PSID
- LIFE CYCLES: 10 PSID

A TANK ISOLATED FROM WATER DEMANDS BY A CHECK/RELIEF VALVE WILL START FLOWING WHEN THE DOWNSTREAM TANK WATER PRESSURE DROPS TO ~1.5 PSI (~2%) AND WILL BE AT FULL FLOW AT ~2.0 PSI (~5% DOWNSTREAM)

A LEAKING BELLOWS WILL CREEP TO ITS ZERO-PRESSURE POSITION

WATER TANK QUANTITY, PERCENT

WATER PRESSURE, PSI

WATER TANK BELLOWS EFFECT ON WATER PRESSURE

B -1301

Y -3102

WCS OUT

MODULE FLOW

20 X 20 MESH WITH .018 IN DIA WIRE

CAN

AUX WET TRASH

COMMODE

AIR DIVERTER VALVE Z8

CAN FLOW

TRASH CAN

CABIN AIR

ALSO CALLED COFFEE CAN

NOTE: BOTH URINE FAN AND URINE SEP MOTORS ARE 120V DC BRUSHLESS

A,K Z6 6.13-3 8

D Z3 6.13-3 40

OPER RANGE: 2400-3830 RPM

.09 LB/SEC (MAX)

LABYRINTH SEAL FLUSH (GSE)

OUTER COVER SUMP DRAIN (GSE)

URINE SEPARATOR 1

A,K Z6 6.13-3 9

D Z2 6.13-3 42

URINE FAN 1

OPER RANGE: 10000-14250 RPM

AIR

15 CFM

V62 R0720A OF1 N/A URINE SEP 1 DRUM SPEED 0 TO 3900 RPM 1 S/S

V62 P0722A OF1 N/A URINE ODOR BACTERIA FILTER ΔP 0 - 5" H2O 1 S/S P

MEASURES ΔP WITH AMBIENT

ODOR/BACTERIA FILTER

AIR OUT TO CABIN

1.0± 0.25 PSID

TP1

1.0± 0.25 PSID

TP2

1.0± 0.25 PSID

AIR

D Z2 6.13-3 41

A,K Z6,4 6.13-3 10

URINE FAN 2

OPER RANGE: 10000-14250 RPM

LABYRINTH SEAL FLUSH (GSE)

OUTER COVER SUMP DRAIN (GSE)

D Z2 6.13-3 43

OPER RANGE: 2400-3830 RPM

.09 LB/SEC (MAX)

URINE SEPARATOR 2

V62 R0721A OF1 N/A URINE SEP 2 DRUM SPEED 0 TO 3900 RPM 1 S/S

A,K Z4 6.13-3 11

22 X 22 MESH FILTER WITH .0075 IN DIA WIRE. FILTER IS REMOVEABLE IN FLIGHT

1/8" ID

10 CFM AIR (MIN)

URINAL HOSE POSITION SENSOR (PIT)

I Z6 6.13-3 19

URINE FLOW RATES: 0.05 LBS/SEC (NOMINAL) 0.088 LBS/SEC (MAX)

URINE DIVERTER VALVE (UDV) (MANUAL VALVE)

URINE MONITORING SYSTEM

EMU DRAIN

Z3 6.3-1

AC 1 POWER TO COMMODE FAN 1

N Z8 6.13-2 30

T 6

MEASURES ΔP WITH AMBIENT (NOMINAL ΔP ~ 2.0" H2O± STS-54 DATA)

V62 P0723A OF2 COMMODE ODOR BACTERIA FILTER ΔP 0 - 5" H2O 1 S/S P

COMMODE FAN 1 (AC1, 3Φ, 115 VAC, 400 HZ)

ΔP=0.11 IN. H2O

AIR

24 CFM AIR

ODOR/BACTERIA FILTER

AIR OUT TO CABIN

ΔP=0.11 IN. H2O

COMMODE FAN 2 (AC2, 3Φ, 115 VAC, 400 HZ)

OPER RANGE: 9000-10500 RPM

T 38

N Z4 6.13-2

OPER RANGE: 9000-10500 RPM

DATE: 08/30/93 | NAME: VEM | VERSION: INK.5

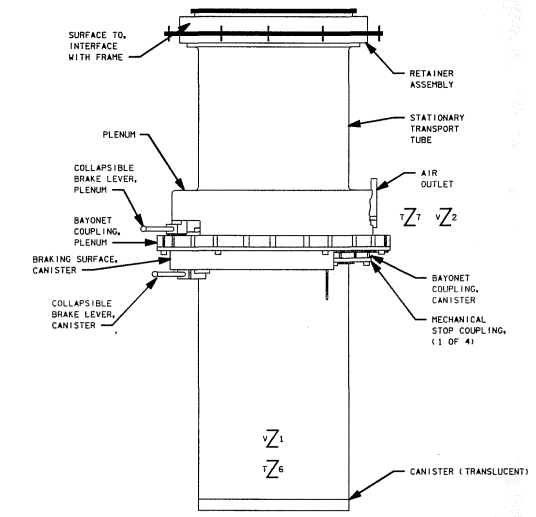

TRANSPORT TUBE ASSEMBLY

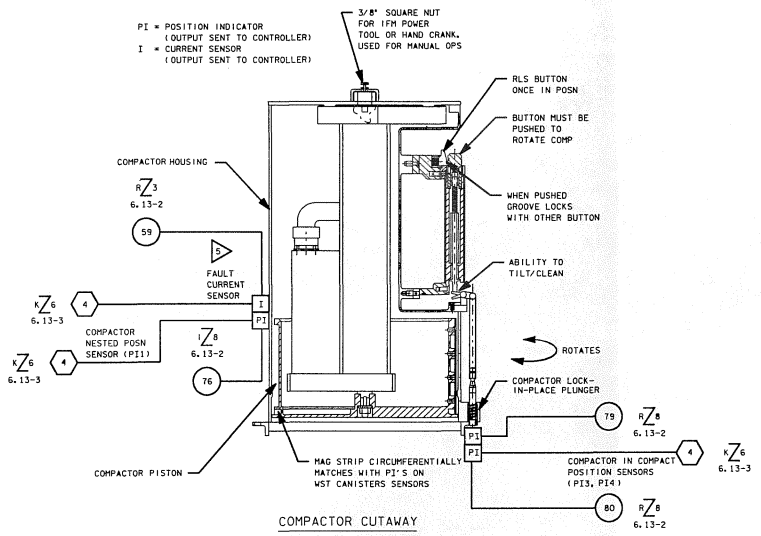

COMPACTOR CUTAWAY

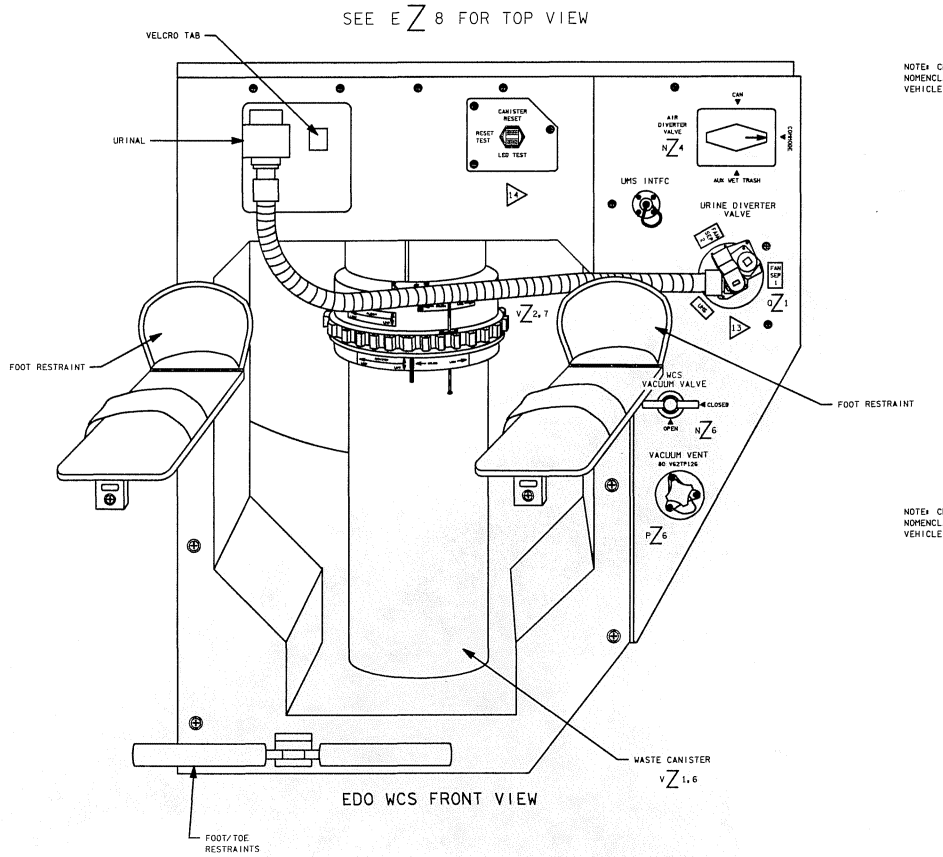

EDO WCS FRONT VIEW

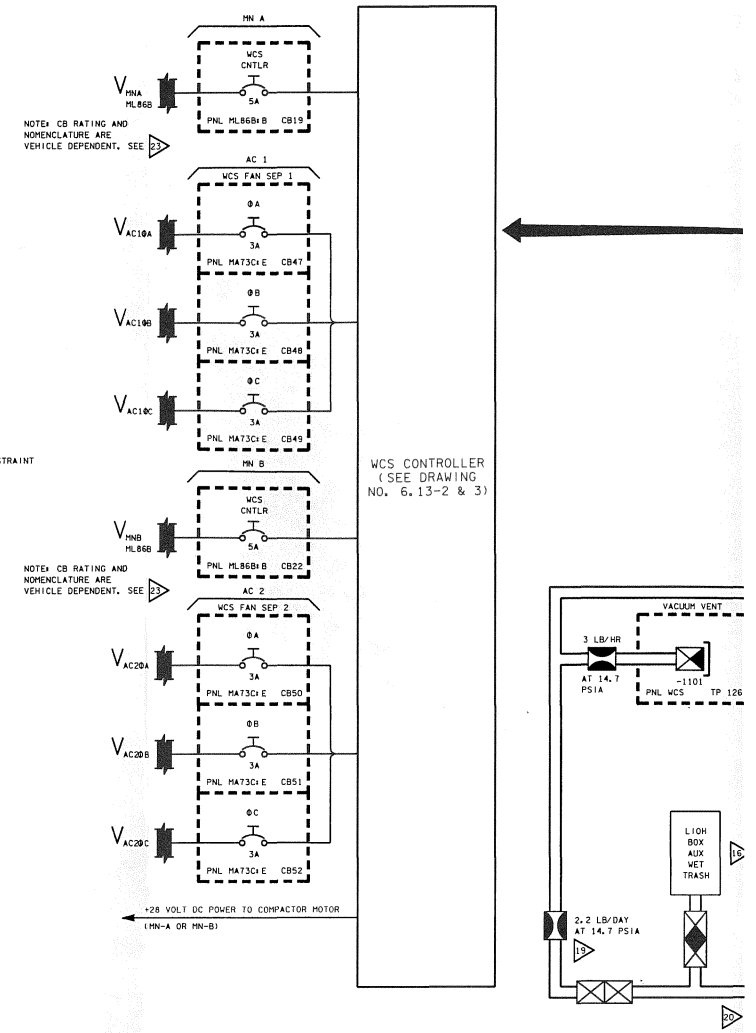

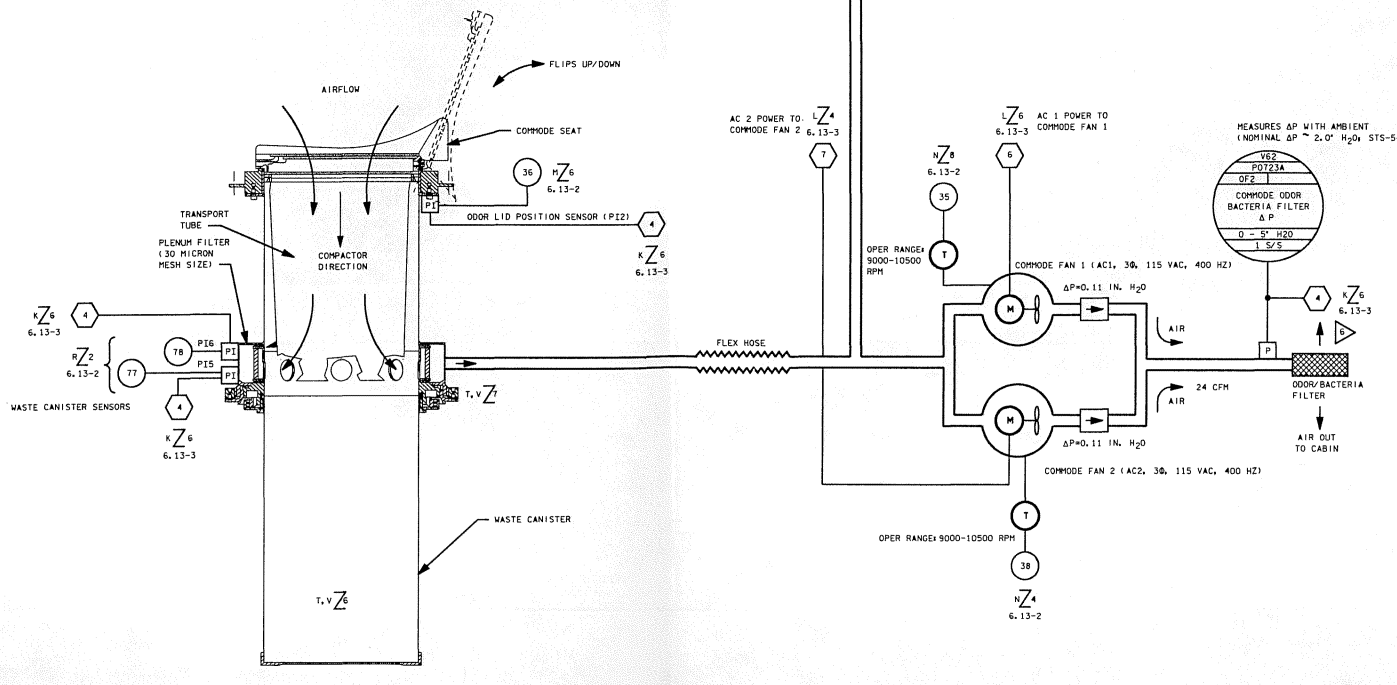

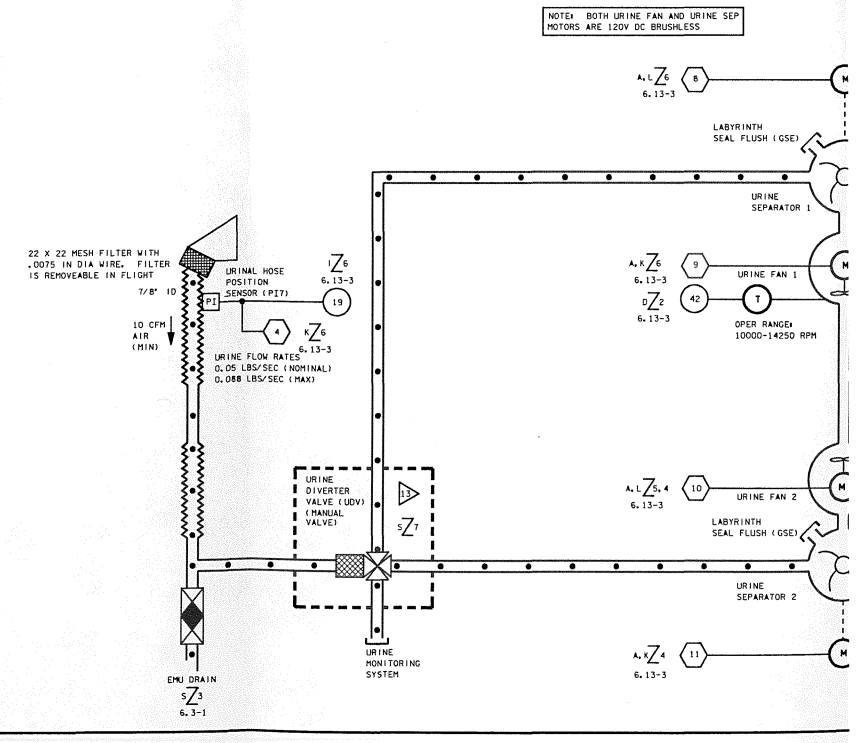

BASIC REV E-3

DATE: 08/31/93	NAME: VSH	VERSION: BPT.4
DATE: 09/27/93	NAME: MDU	VERSION: INK.1
DATE: 10/07/93	NAME: MDU	VERSION: INK.2

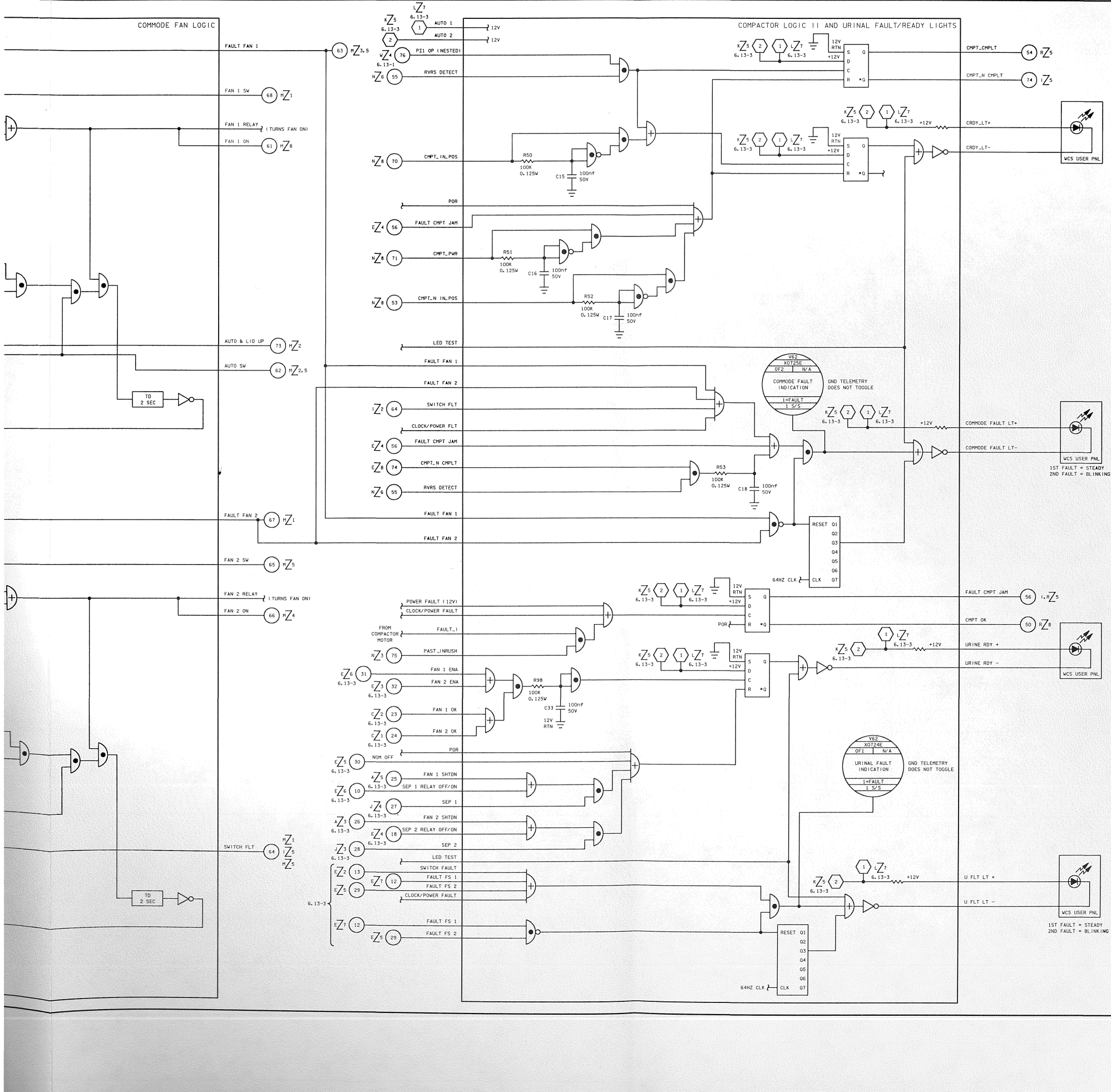

EDO WCS OPERATIONS

COMMODE OPS

NOMINAL:

AUTO OPS- COMMODE FAN 1 (CF1) OR COMMODE FAN 2 (CF2) WILL IMMEDIATELY START WHEN COMMODE DOOR LID/SEAT (CS) IS LIFTED UP. STANDARD SWITCH CONFIG: WCS PWR SEL SW POSITIONS AUTO 1, OFF 2, FAN PWR SW IN AUTO- CF1 WILL TURN ON. IF OFF 1, AUTO 2, AUTO- CF2 WILL TURN ON. SIMULTANEOUSLY, A 15-SEC FDA TIME DELAY (TD1) WILL BE INITIATED, GIVING CF1(2) TIME TO REACH OPERATING RPM OF 10500 (NO LOWER THAN 9000 RPM). COMMODE OPS CAN COMMENCE AT TIME IF NO FAULTS ARE DETECTED. WHEN COMMODE OPS COMPLETE, THE CS IS PUT DOWN AND CF1(2) WILL SHUT ITSELF DOWN AFTER ANOTHER TD OF 15 SECONDS (ALLOWS THE FDA TO RESET SO NO FAULT IS 'DETECTED' WHILE CF 1(2) SLOWS DOWN).

OFF-NOMINAL:

IF CF 1(2) NOT UP TO PROPER RPM'S BY T+15 SEC, COMMODE FAULT INDICATION (V62X0725E, 1 = FAULT) WILL OCCUR, RED COMMODE FAULT LED WILL ILLUMINATE ON THE EDO WCS USER PANEL. AUTOMATICALLY AND SIMULTANEOUSLY, CF 1(2) WILL SHUTDOWN AND CF 2(1) WILL TURN ON. THE COMMODE FAULT LED WILL STAY LIT STEADILY (EVEN AFTER THE SECOND FAN COMES ON), CONTINUE NORMAL AUTO OPS (SEE RESET BELOW). A SECOND FAULT (E.G., THE SECOND FAN COMES ON BUT DOES NOT ATTAIN PROPER SPEED) CAUSES COMMODE FAULT LED TO BLINK, THE SECOND FAN WILL BE DISABLED. NO AUTO OPS WILL BE POSSIBLE- MANUAL MUST BE USED.

RESET FAULT INDICATIONS- CYCLE APPROPRIATE WCS PWR SEL SW OR WCS CNTLR CB. (E.G., IF WCS PWR SEL SW- AUTO 1, CYCLE FROM AUTO 1 TO OFF 1 TO AUTO 1. THEN GO TO MAN 1 FOR MANUAL OPS. OR, CYCLE ML86B4B (MAIN8) WCS CNTLR CB).

MANUAL:

MANUAL OPS IS ONLY USED FOR 2 DETECTED CF FAILURES, CONTROLLER FAILURE, OR CABIN CLEANUP APPLICATIONS.

NO FDA (FAULT LED'S OR MSID'S) SEEN IF EITHER WCS PWR SEL SW IS IN ITS RESPECTIVE MANUAL POSITION (MAN 1 OR MAN 2). HOWEVER, MANUAL CF OPS ARE POSSIBLE WHILE MAINTAINING FDA ANNUNCIATION IF FAN PWR SW IN FAN 1(2) WHILE WCS PWR SEL SW IN AUTO 1(2).

MANUAL CF USING WCS LOGIC AND FAN PWR SWITCH (AIR FLOW THROUGH AUX VET TRASH FOR CABIN CLEANUP)- LID IS DOWN. FAN PWR SW TO FAN 1(2)- CF 1(2) GOES ON (IF NO PREVIOUS FAULTS) AND FDA TD#15 SEC INITIATED. CF 1(2) ATTAINS PROPER SPEED, FDA ENABLED. TO TURN FAN OFF, FAN PWR SW TO AUTO- CF 1(2) WILL TURN OFF SINCE PI2 INDICATES LID IS CLOSED. IF PI2 FAILS TO INDICATE CLOSURE, CF CAN BE TURNED OFF BY PUTTING WCS PWR SEL SW TO OFF 1 (IF CF 1) OR OFF 2 (IF CF 2).

POWERED MANUAL COMMODE OPS (TWO DETECTED CF FAILURES OR CONTROLLER FAILURE)- WCS PWR SEL SW TO MAN 1(2); CF 1(2)- ON (NOTE: RESPECTIVE URINE FAN AND SEP ALSO POWERED OR DEPOWERED WHEN IN MAN 1 OR 2). COMMODE USE NOW POSSIBLE. WHEN OPS COMPLETE, WCS PWR SEL SW OFF 1(2), CF 1(2)- OFF.

COMPACTOR OPS

NOMINAL:

CS UP AND COMPACTOR ROTATED INTO POSITION. IF PROPER POSITION, PI3 AND PI4 WILL MAKE CONTACT (ACTIVATED BY MECHANICAL PIN-INTERLOCK MECHANISM)- GREEN READY TO COMPACT LED IS LIT. COMPACT BUTTON PUSHED (IF COMPACTOR NOT IN CORRECT POSITION, OR IF PI3 OR PI4 HAVE FAILED, PUSHING THIS BUTTON WILL HAVE NO EFFECT); COMPACTION CYCLE BEGINS. WHEN COMPACTOR COMPLETELY DOWN IN CANISTER, READY TO COMPACT LED GOES OFF. COMPACTOR REVERSES DIRECTION BACK UP AND TURNS OFF. THIS TRIPS PI1 ('COMPACTOR FULLY NESTED'), INDICATING THE COMPACTOR IS FULLY STOPPED AND IN THE CORRECT POSITION. READY TO COMPACT LED WILL LIGHT AGAIN. THE COMPACTOR IS ROTATED BACK TO ITS STORAGE POSITION. THE READY TO COMPACT LED IS EXTINGUISHED AUTOMATICALLY, AND THE CS IS CLOSED.

CANISTER ULLAGE INDICATED BY PI5 OR PI6 (30 USES PER CANISTER). IF ONLY ONE DAY ULLAGE ('7 USES') IS LEFT (PI5), YELLOW 'SERVICE CANISTER' LED ON THE USER PANEL WILL BE LIT AND STEADY. THE 'CANISTER- ONE DAY LEFT' MSID WILL BE DOWNLINKED (V62X0726E, 1 = ONE DAY LEFT). WHEN ONLY ONE USE LEFT (PI6), PI6 WILL BE TRIPPED- THE 'SERVICE CANISTER' LED WILL BLINK. CANISTER IS THEN GOOD FOR ONE MORE USE BEFORE CHANGEOUT. AFTER CHANGEOUT, RESET 'SERVICE CANISTER' LED USING SWITCH ON WCS FACADE (NOTE: THIS SWITCH IS ALSO THE 'PUSH-TO-TEST' SWITCH FOR USER PANEL FAULT LIGHTS).

OFF-NOMINAL:

IF COMPACTOR FAILURE IS DUE TO JAMMING (COMPACT OR RETRACT CYCLE), A 'FAULT CURRENT' WILL BE GENERATED ('FAULT CURRENT' IS EQUIVALENT TO COMPACTOR FORCE EXCEEDING 125 LBF). THE 'COMMODE FAULT INDICATION' (V62X0725E, 1 = FAULT) WILL BE DOWNLINKED, THE RED 'COMMODE FAULT' LED WILL BE LIT STEADILY. 'READY TO COMPACT' LED WILL GO OUT.

RESET FAULT INDICATIONS- CYCLE APPROPRIATE WCS PWR SEL SW OR WCS CNTLR CB. (E.G., IF WCS PWR SEL SW- AUTO 1, CYCLE FROM AUTO 1 TO OFF 1 TO AUTO 1. OR, CYCLE ML86B4B (MAIN8) WCS CNTLR CB1.

MANUAL:

MANUAL COMPACTOR OPS ONLY POSSIBLE THROUGH IFM PROCEDURES.

URINAL OPS

NOMINAL:

NORMAL CONFIG FOR URINAL SEL SW IS SEP 1 (PROCESS BELOW IS ESSENTIALLY IDENTICAL IF IN SEP 2 POSITION). WHEN URINAL HOSE (UH) UNSTOWED PI7, SIMULTANEOUSLY AND AUTOMATICALLY AN FDA TD OF 15 SEC IS INITATED AND POWER IS SENT TO TURN ON URINE SEPARATOR 1(2). FOUR TO FIVE SECONDS LATER, URINE FAN 1(2) IS TURNED ON. IF NO PROBLEM WITH EITHER UNIT BY T+15 SEC, GREEN URINAL READY LED WILL BE STEADILY LIT. URINAL OPS CAN COMMENCE. WHEN THE CREWPERSON IS DONE, UH IS STOWED (PI7), ACTIVATING TWO SEQUENTIAL TIME DELAYS. FIRST, AFTER 60 SEC, THE URINE FAN IS TURNED OFF. FORTY SECONDS AFTER THIS, THE URINE SEP GOES OFF (TD'S ALLOW FOR ADEQUATE CLEARING OF LIQUID FROM THE SYSTEM).

IF UH LIFTED BEFORE 60 SEC TO, URINE FAN AND SEP WILL CONTINUE RUNNING. URINAL READY LED ACTIVATES. IF UH LIFTED AFTER 60 SEC TO, SEP KEEPS RUNNING AND FAN STARTS AGAIN. URINAL READY LED ON AFTER FAN ATTAINS GOOD SPEED. IF UH LIFTED AFTER 100 SEC, URINAL USE CYCLE STARTS FROM BEGINNING.

OFF-NOMINAL:

IF PROPER RPM'S NOT REACHED ON EITHER OR BOTH OF THE FANS (MUST BE >10000# NOMINAL = 14250) OR SEPARATOR (MUST BE >2400# NOMINAL = 3830), RED 'URINE FAULT' LIGHT WILL BE LIT- STEADY FOR ONE FAULT, BLINKING FOR TWO OR MORE. ALSO, 'URINAL FAULT INDICATION' MSID (V62X0724E, 1 = FAULT) WILL BE DOWNLINKED. BOTH FAN AND SEPARATOR WILL SHUT OFF. LOGIC-CONTROLLED URINAL OPS CAN ONLY CONTINUE BY CONFIGURING TO THE ALTERNATE SYSTEM. TO RESET FAULT INDICATIONS-CYCLE APPROPRIATE WCS PWR SEL SW OR WCS CNTLR CB. (E.G., IF WCS PWR SEL SW- AUTO 1, CYCLE FROM AUTO 1 TO OFF 1 TO AUTO 1. THEN GO TO MAN 1 FOR MANUAL OPS. OR, CYCLE ML86B4B (MAIN8) WCS CNTLR CB).

MANUAL:

MANUAL ONLY USED FOR 2 DETECTED URINE FAN/SEP FAILURES OR A CONTROLLER FAILURE. MANUAL BYPASS WORKS WITHOUT UH 'STOWED' OR 'UNSTOWED' INDICATIONS (PI7).

NO FDA (FAULT LED'S OR MSID'S) SEEN IF EITHER WCS PWR SEL SW IS IN ITS RESPECTIVE MANUAL POSITION (MAN 1 OR MAN 2). FAULT LOGIC IS NOT IN EFFECT.

POWERED MANUAL URINAL OPS- WCS PWR SEL SW TO MAN 1(2) (URINAL SEL SW POSITION MAKES NO DIFFERENCE); URINE FAN 1(2)/SEP 1(2) ACTIVATE- URINAL OPS CAN COMMENCE. (NOTE: RESPECTIVE CF ALSO POWERED OR DEPOWERED WHEN IN MAN 1 OR 2). WHEN COMPLETE, WCS PWR SEL SW TO OFF 1(2); URINE FAN/SEP 1(2)- OFF, NOTE: TD'S WITHIN FAULT LOGIC NOT IN EFFECT WHEN FAN/SEP TURNED OFF IN MANUAL OPS.

3. NOMINAL COMPACTOR LOGIC SEQUENCE
   - A. COMPACTOR IS PUT IN POSITION (PI3 AND PI4 = 1 (RZ8)
   - B. COMPACTOR READY LIGHT FLASHES (EZ7)
   - C. THE COMPACTOR BUTTON IS DEPRESSED (OZ7): THIS CLOCKS THE THREE COMPACTOR MOTOR FLIP-FLOPS (OZ7). THESE SEND THE POWER (28V) AND DIRECTION (DOWN/UP) TO THE COMPACTOR MOTOR (OZ4). THIS CLOCK SIGNAL STOPS WHEN THE COMPACTOR BUTTON IS RELEASED
   - D. A 2 SECOND DELAY (PZ3) ALLOWS THE STARTUP CURRENT TO PASS AND NOT GENERATE A FAULT OR THE 100LB LOAD SIGNAL
   - E. THE COMPACTOR PROCEEDS DOWNWARD UNTIL THE CURRENT COMPARATOR (OZ3) DETECTS A LOAD > 100LB
   - F. WHEN THE COMPACTOR IS AT FULL EXTENSION (RECEIVING THE 100LB LOAD SIGNAL) IT REVERSES ITS DIRECTION. THIS IS ACCOMPLISHED BY THE CMPT_EXTEND (NZ6) SIGNAL RESETTING THE CMPT_ON FLIP-FLOP (OZ7) WHICH CONTROLS THE POWER TO THE COMPACTOR. ONCE THE POWER IS REMOVED THE 100LB LOAD SIGNAL CEASES
   - G. THE "Q OUPUT OF THE SAME FLIP-FLOP, RETRACT (NZ5), STARTS A 2 SEC TIME DELAY (OZ6) WHICH, AFTER TWO SECONDS CLOCKS THE FLIP-FLOP (PZ6) WHICH CLOCKS THE CMPT_ON FLIP-FLOP AND RESETS THE CMPT_DIRECTION FLIP-FLOP. THIS RESTORES POWER AND REVERSES THE DIRECTION OF THE COMPACTOR. THE SIGNAL FROM THE RETRACT FLIP-FLOP (PZ7) REMAINS HIGH TO END THE COMPACTOR SEQUENCE WHEN THE COMPACTOR RETURNS TO HOME POSITION
   - H. ONCE THE COMPACTOR RETURNS TO THE HOME POSITION ANOTHER 100LB LOAD SIGNAL IS GENERATED (RZ6) WHICH IN CONJUNCTION WITH THE OUTPUT OF THE RETRACT FLIP-FLOP CLOCKS THE RVRS_DETECT FLIP-FLOP (PZ6). THE RVRS DETECT SIGNAL (RZ5) RESETS THE THREE FLIP=FLOPS THAT CONTROL POWER AND DIRECTION (OZ7) THEREBY ENDING THE COMPACTOR SEQUENCE

     IF THE SECOND 100LB LOAD DETECT (RZ6) IS NOT ACCOMPANIED BY A CMPT CMPLT SIGNAL (RZ5), A COMMODE FAULT WILL BE GENERATED (EZ5)

2. COMPACTOR LIGHTS (ONE DAY, ONE USE LEFT)
   - A. WHEN THE COMPACTOR TRAVERSES DOWN THE TUBE, BEFORE THE CANNISTER HAS REACHED THE ONE DAY LEFT OR ONE USE LEFT CAPACITY, IT CLOSES PI's 5 AND 6 WHICH ARE ONE USE LEFT AND ONE DAY LEFT RESPECTIVELY (NZ2) WHICH CLOCK TWO RESPECTIVE FLIP-FLOPS (PZ2) BRINGING THE "Q OUTPUTS TO 0. THESE OUTPUTS INHIBIT THE SIGNAL THAT WOULD ILLUMINATE THE CANISTER SERVICE LIGHT (NZ2)
   - B. WHEN THE COMPACTOR HAS REACHED FULL COMPACTION (100LB LOAD,RZ5) THE CMPT_EXTEND (NZ6) IS GENERATED WHICH SENDS ITS INPUT (RZ1) INTO THE TWO AND GATES (PZ3) WHICH WILL CLOCK THE NEXT SET OF FLIP-FLOPS (PZ1) WHEN THE PI's REMAIN OPEN. UNTIL THE PI's REMAIN OPEN, HOWEVER, THE OTHER INPUTS TO THOSE AND GATES ARE 0 WHICH INHIBITS THE OUTPUT OF THE GATES
   - C. WHEN THE COMPACTOR IS SUFFICIENTLY FULL THAT THE FIRST PI5 IS NOT CONTACTED, IT DOES NOT GENERATE A SIGNAL, SO THE FIRST FLIP-FLOP (PZ3) IS NOT CLOCKED, THIS MEANS THAT THE "Q OUTPUT WILL REMAIN A ONE BECAUSE IT WAS PREVIOUSLY RESET WITH THE RVRS DETECT_SIGNAL (RZ1)

     THIS ALLOWS THE CMPT EXTEND (RZ1) SIGNAL TO PROPOGATE TO THE CLOCK INPUT OF THE ONE DAY LEFT FLIP-FLOP (OZ2)
   - D. WHEN THE ONE DAY LEFT FLIP-FLOP IS CLOCKED, ITS Q OUTPUT GOES THROUGH AN INVERTER WHICH ALLOWS THE CURRENT TO FLOW THROUGH THE LIGHT (NZ2) TO THE LOW SIGNAL
   - E. WHEN THE COMPACTOR FILLS ABOVE THE ONE USE LEFT LEVEL, PI6, A SIMILAR PROCESS TAKES PLACE WITH ONE EXCEPTION. THE OUTPUT OF THE ONE USE LEFT FLIP-FLOP (OZ2) GOES INTO A CLOCK WHICH PULSES THE INPUT TO THE INVERTER, THEREBY PRODUCING THE PULSING LIGHT

NOTES: 1. SR FLIP-FLOP WITH DATA TRUTH TABLE

S	R	C	D	Q	*Q
1	0	X	X	1	0
0	1	X	X	0	1
0	0	X	X	UNSTABLE	
0	0	1	0	0	1
0	0	1	1	1	0
0	0	0	*	LAST VALUE	
1	1	X	X	NOT ALLOWED	

* 13 EDO WMS 2

SIGNATURE		DATE	NATIONAL AERONAUTICS AND SPACE ADMINISTRATION LYNDON B. JOHNSON SPACE CENTER HOUSTON, TEXAS	
DSGN	CONNIE RILEY	10/26/93		
DR	S. EGAN-WYER	1/4/93		
ENGR	M. FITZPATRICK		EDO WASTE MANAGEMENT	
ENGR	M. S. Fitzpatrick	9/23/93		
APP	Linda Dunn	10/5/93		
APP			SPACE SHUTTLE	DWG NO 6.13
CADS	S. K. Kimbrell	10.8.93	OV 105	
LTR E	PCN 3		121 X 34	PAGE SHEET 2 OF 3

BASIC REV E-3

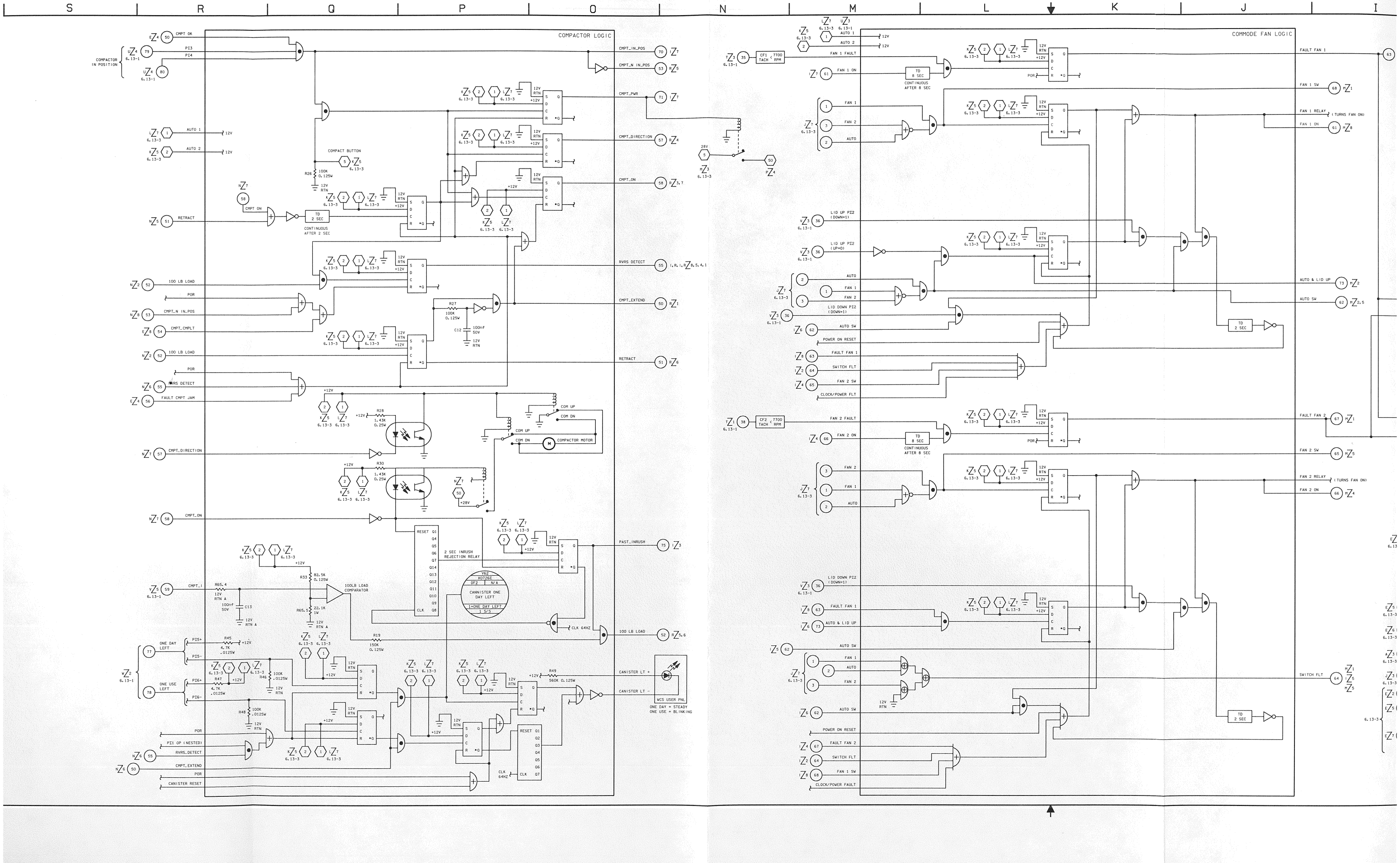
S
R
Q
P
O
N
M
L
K
J
I
COMPACTOR LOGIC
COMMODE FAN LOGIC
COMPACTOR IN POSITION
CMPT OK
PI3
PI4
AUTO 1
AUTO 2
COMPACT BUTTON
RETRACT
CMPT ON
TD 2 SEC
CONTINUOUS AFTER 2 SEC
100 LB LOAD
POR
CMPT_N IN_POS
CMPT_CMPLT
RVRS DETECT
FAULT CMPT JAM
CMPT_DIRECTION
CMPT_ON
CMPT_I
ONE DAY LEFT
ONE USE LEFT
PI1 OP (NESTED)
CMPT_EXTEND
CANISTER RESET
CMPT_IN_POS
CMPT_N IN_POS
CMPT_PWR
CMPT_DIRECTION
CMPT_ON
RVRS DETECT
CMPT_EXTEND
RETRACT
COM UP
COM DN
COMPACTOR MOTOR
2 SEC INRUSH REJECTION RELAY
100LB LOAD COMPARATOR
PAST_INRUSH
CLK 64HZ
100 LB LOAD
CANISTER LT +
CANISTER LT -
WCS USER PNL
ONE DAY = STEADY
ONE USE = BLINKING
CANNISTER ONE DAY LEFT
1=ONE DAY LEFT
1 S/S
FAN 1 FAULT
FAN 1 ON
FAN 1
FAN 2
AUTO
LID UP PI2 (DOWN=1)
LID UP PI2 (UP=0)
LID DOWN PI2 (DOWN=1)
AUTO SW
POWER ON RESET
FAULT FAN 1
SWITCH FLT
FAN 2 SW
CLOCK/POWER FLT
FAN 2 FAULT
FAN 2 ON
FAULT FAN 2
FAN 2 RELAY
(TURNS FAN ON)
FAN 1 SW
FAN 1 RELAY
AUTO & LID UP
CLOCK/POWER FAULT
CF1 TACH 7700 RPM
CF2 TACH 7700 RPM
TD 8 SEC
CONTINUOUS AFTER 8 SEC
TD 2 SEC
12V RTN
+12V
28V

DATE: 10/07/93	NAME: MDU	VERSION: INK: 2

EDO COMMODE FAN LOGIC SEQUENCE

1. IN NOMINAL AUTO OPS, WHEN THE COMMODE LID IS LIFTED, A POSITION INDICATOR, LID UP PI2 (MZ6), SENDS A SIGNAL TO AN AND GATE (LZ6). THIS SIGNAL IN CONJUNCTION WITH THE AUTO SIGNAL (MZ6) ALLOWS THE OUTPUT OF THE AND GATE TO CLOCK A FLIP-FLOP (KZ6).
2. WHEN THIS FLIP-FLOP (KZ6) IS CLOCKED, ITS OUTPUT Q GOES THROUGH AN OR GATE (KZ7) TO THE FAN RELAYS. THESE RELAYS POWER THE FAN ON, FAN 1 RELAY (JZ7). THE OUTPUT OF THE OR GATE ALSO SENDS A FAN 1 ON (JZ7) TO THE FAULT LOGIC.
3. THE FAN 1 ON SIGNAL (MZ8) ENTERS AN 8 SECOND TIME DELAY WHICH ALLOWS THE FAN TO SPIN UP TO THE PROPER RPM'S BEFORE TESTING FOR FAULTS.
4. DURING THIS TIME THE FAN TACHOMETER (6,13-1) IS SENDING A CONTINUOUS SIGNAL, FAN 1 FAULT (MZ8) ON THE OUTPUT OF THE FAN. THIS OUTPUT IS A DISCRETE WHICH DETERMINES WHETHER THE FAN RPM'S ARE WITHIN RANGE.
5. WHEN THE 8 SECOND TIME DELAY IS COMPLETE (MZ8), THE FAN 1 FAULT SIGNAL WILL BE SENT THROUGH AN AND GATE (LZ8) TO A FLIP-FLOP (KZ8). IF THE TACHOMETER IS WITHIN RANGE, THE FAN 1 FAULT SIGNAL SHOULD BE 0 WHICH WILL NOT CLOCK THE FLIP-FLOP. IF, HOWEVER, THE FAN SPEED IS NOT IN RANGE, THE FLIP-FLOP WILL BE CLOCKED AND THE FAULT FAN 1 (JZ8) WILL BE ISSUED.
6. THE FAULT FAN 1 SIGNAL WILL BE SENT IN TWO DIRECTIONS: ONE WILL ILLUMINATE THE COMMODE FAULT LT (EZ5) THE OTHER WILL TURN ON COMMODE FAN 2

ILLUMINATE COMMODE FAN LT

7. THE FAULT FAN 1 SIGNAL (MZ6) PROPAGATES THROUGH TWO OR GATES (FZ5) TO AN AND GATE. THIS AND GATE SIGNAL WILL PROPOGATE IF IT IS THE FIRST FAN FAULT BECAUSE THE OTHER INPUT, THE OUTPUT OF A NAND GATE (FZ4) WILL BE A 1 UNTIL THE SECOND FAN FAULT.
8. THE AND GATE SIGNAL (FZ5) PROPAGATES THROUGH AN OR GATE (EZ5) TO AN INVERTER (EZ5) WHICH ALLOWS THE 12V INPUT (FZ5) TO GO THROUGH THE LIGHT (THEREBY ILLUMINATING IT) TO THE LOW SIGNAL OUT OF THE INVERTER.

TURN ON COMMODE FAN 2

9. THE FAULT FAN 1 SIGNAL ALSO TURNS OFF FAN 1 AND STARTS FAN 2.
10. THE FAULT FAN 1 SIGNAL (MZ5) PROPAGATES THROUGH A 4-INPUT OR GATE (LZ5) TO THE RESET OF THE FLIP-FLOP (KZ6) THAT TURNED ON FAN 1. RESETTING THIS FLIP-FLOP REMOVES POWER FROM FAN 1 AND REMOVES THE FAN 1 ON SIGNAL (JZ7) THAT IS USED IN FAULT DETECTION.
11. FAULT FAN 1 (MZ2) IN CONJUNCTION WITH AUTO & LID UP (MZ2) CLOCKS THE FLIP-FLOP (KZ2) THAT TURNS ON THE RELAY THAT POWERS FAN 2.
12. THE SAME TYPE OF FAULT LOGIC (MZ4) APPLIES TO FAN 2 AS FOR FAN 1.
13. IF FAULT FAN 2 IS DETECTED, IT PROPAGATES TO A NAND GATE (FZ4) THAT INHIBITS THE FAN 1 FAULT AND GATE (FZ5) AND ALLOWS A CLOCK (FZ4) TO BEGIN COUNTING.
14. THE OUTPUT OF THIS CLOCK GOES THROUGH AN OR GATE TO THE SAME INVERTER (FZ5) THAT ILLUMINATED THE LIGHT ORIGINALLY. IN THIS CASE, HOWEVER, THE LIGHT ONLY ILLUMINATES WHEN THE CLOCK OUTPUT IS 1. THIS GIVES THE BLINKING EFFECT.

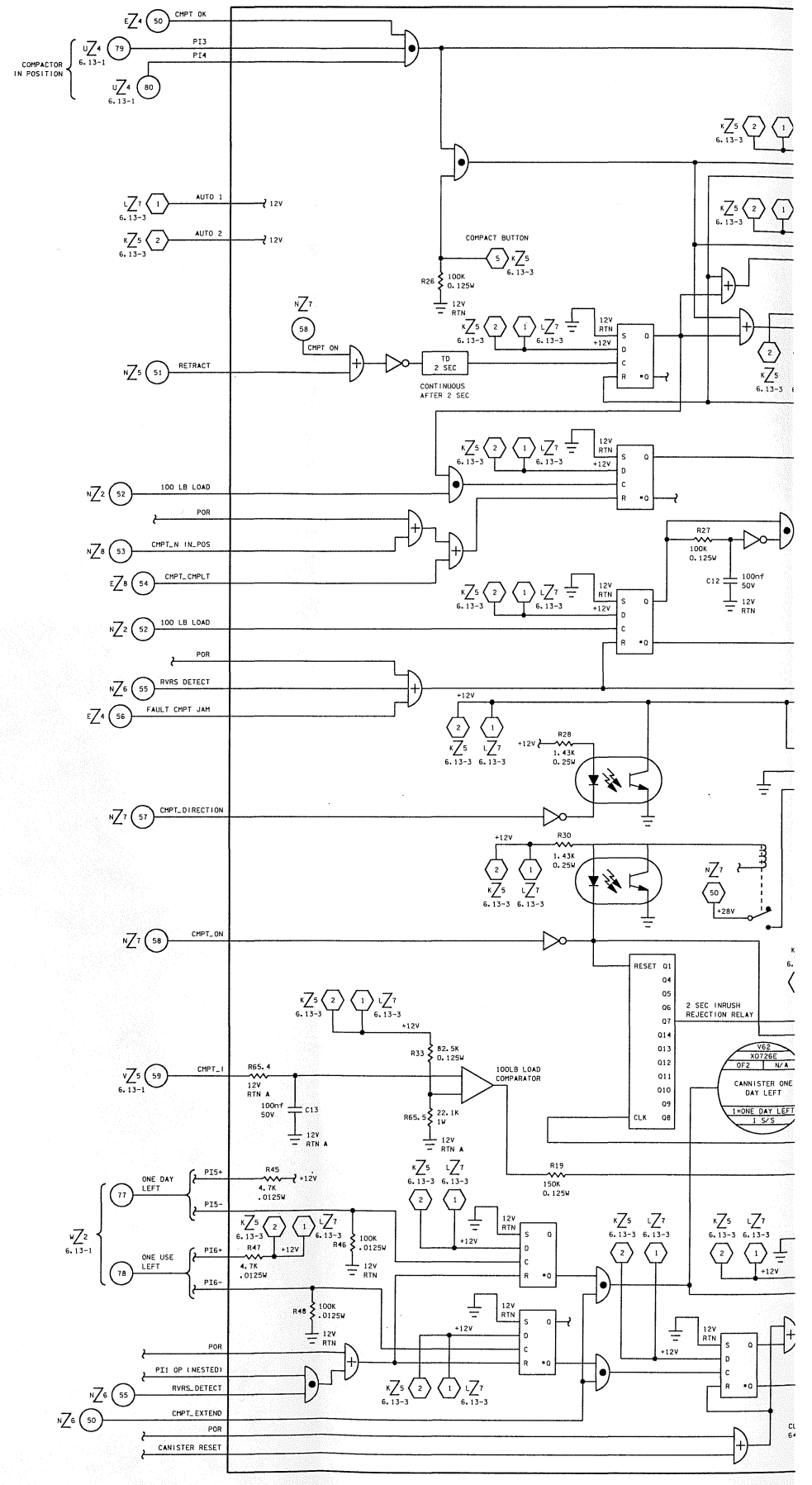

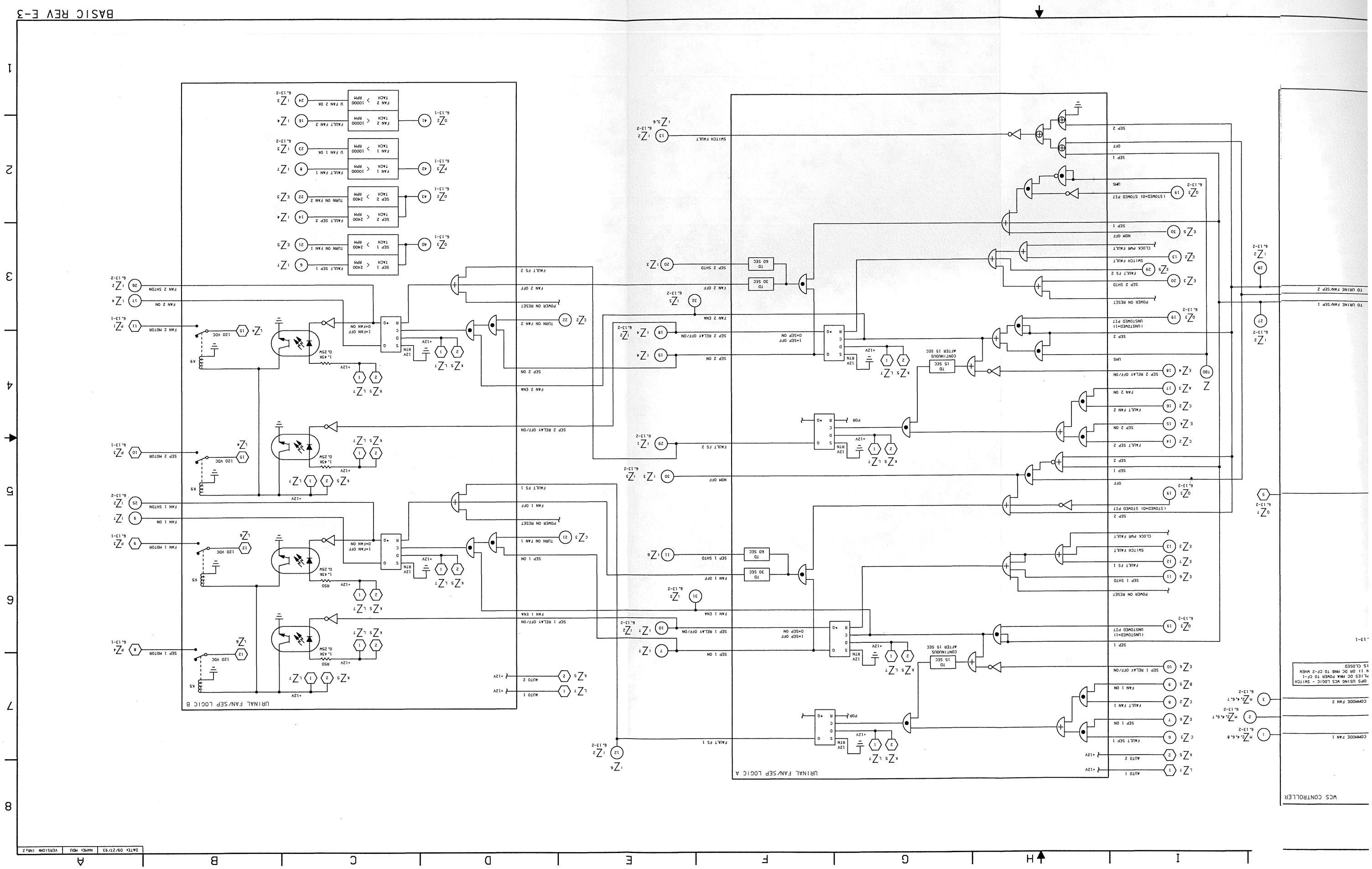
BASIC REV E-3
URINAL FAN/SEP LOGIC B
URINAL FAN/SEP LOGIC A
WCS CONTROLLER
TO URINE FAN/SEP 2
TO URINE FAN/SEP 1
COMMODE FAN 2
COMMODE FAN 1
SWITCH FAULT
FAN 2 SHTD
FAN 2 OFF
FAN 2 ENA
SEP 2 RELAY OFF/ON
SEP 2 ON
FAULT FS 2
NOM OFF
SEP 1 SHTD
FAN 1 OFF
FAN 1 ENA
SEP 1 RELAY OFF/ON
SEP 1 ON
FAULT FS 1
POWER ON RESET
TURN ON FAN 2
TURN ON FAN 1
FAULT FAN 2
FAULT SEP 2
FAULT FAN 1
FAULT SEP 1
U FAN 2 OK
U FAN 1 OK
FAN 2 SHTDN
FAN 2 ON
FAN 2 MOTOR
FAN 1 SHTDN
FAN 1 ON
FAN 1 MOTOR
SEP 2 MOTOR
SEP 1 MOTOR
120 VDC
AUTO 1
AUTO 2
+12V
12V RTN
POR
CLOCK PWR FAULT
UNSTOWED P17
(STOWED+D) STOWED P17
UMS
TO 60 SEC
TO 30 SEC
TO 15 SEC
CONTINUOUS AFTER 15 SEC
1=SEP OFF
0=SEP ON
1=FAN OFF
0=FAN ON
DATE: 09/27/93
NAME: MDU
VERSION: INK.2

DATE: 08/24/93	NAME: VSH	VERSION: BPT# 1
DATE: 09/07/93	NAME: VEM	VERSION: INR# 1
DATE: 09/27/93	NAME: MDU	VERSION: INR# 2

2. EDO WCS CONTROLLER URINAL LOGIC

A. THE URINAL SEL SWITCH IS EITHER SELECTED TO SEP 1 OR SEP 2. THE LOGIC FOR BOTH SEPARATORS IS IDENTICAL

B. WHEN THE URINAL HOSE IS UNSTOWED IT GENERATES THE SIGNAL, UNSTOWED PI? (IZ6)

C. THIS SIGNAL IN CONJUNCTION WITH THE SEP 1 (IZ6) SIGNAL FROM THE SWITCH GOES THROUGH AN AND GATE (HZ6) TO TWO LOCATIONS

D. ONE OUTPUT OF THE AND GATE GOES TO THE CLOCK INPUT OF A FLIP-FLOP (GZ6). THE *Q OUTPUT, SEP 1 RELAY OFF/ON, PROPAGATES THROUGH AN INVERTER (CZ6) TO AN OPTOCOUPLER (CZ6) THAT CLOSES THE RELAY THAT POWERS THE SEP MOTOR

E. THE SEP 1 RELAY OFF/ON SIGNAL ALSO FEEDS BACK (IZ7) TO THE FAULT DETECTION LOGIC. THIS SIGNAL PROPAGATES THROUGH AN INVERTER (HZ7) THROUGH AN OR GATE (HZ7) WHERE IT IS A REDUNDANT INPUT TO A TIME DELAY CIRCUIT (CZ7). THE OTHER INPUT IS THE SECOND PART OF THE OUTPUT OF THE SEP 1, UNSTOWED PI AND GATE (HZ6)

F. THE Q OUPUT OF THE FLIP-FLOP (GZ6), SEP 1 ON, ALSO GOES TWO PLACES. THE FIRST FEEDS BACK INTO THE FAULT LOGIC (IZ7) TO ALLOW THE FAULT SIGNAL FROM THE SEP 1 TACH (CZ3) TO PROPAGATE THROUGH AN OR GATE TO AN AND GATE (GZ7) WHERE IT WAITS FOR THE TIME DELAY CIRCUIT TO COMPLETE

G. IF EVERYTHING IS NOMINAL THE FAULT SEP 1 SIGNAL (IZ7) SHOULD DROP TO ZERO WELL BEFORE THE TIME DELAY CIRCUIT RUNS OUT

H. THE SECOND PLACE THE SEP 1 ON SIGNAL (FZ7) GOES IS TO AN AND GATE (DZ5) WHERE IT WAITS FOR THE SIGNAL FROM THE TACHOMETER THAT THE SEPARATOR HAS REACHED THE ACCEPTABLE SPEED

I. WHEN THE TACHOMETER DETECTS THAT THE SPEED IS WITHIN LIMITS IT DROPS THE FAULT SEP 1 SIGNAL TO ZERO AND SETS THE TURN ON FAN 1 SIGNAL (CZ3) TO 1

J. THE TURN ON FAN 1 SIGNAL IN CONJUNCTION WITH THE SEP 1 ON SIGNAL (DZ5) PROPAGATE THROUGH TWO AND GATES (DZ5) TO THE CLOCK INPUT OF A FLIP-FLOP (CZ5). THE *Q OUTPUT OF THIS FLIP-FLOP GOES THROUGH AN OPTOCOUPLER (CZ6) THAT CLOSES THE RELAY THAT TURNS THE FAN ON

K. THE FAN 1 ON SIGNAL FROM THE Q OUTPUT OF THE FLIP-FLOP (CZ6) FEEDS BACK TO THE FAULT LOGIC (IZ7) WHERE IT ALLOWS THE FAULT FAN 1 INPUT TO PROPAGATE THROUGH AN OR GATE TO AN AND GATE (GZ7) WHERE IT WAITS FOR THE TIME DELAY CIRCUIT TO RUN OUT. THE FAN SHOULD COME UP TO SPEED WELL BEFORE THE TIME DELAY EXPIRES

URINAL READY LIGHT

L. WHEN THE URINAL FAN IS UP TO SPEED AND THE TACHOMETER ISSUES THE U FAN 1 OK SIGNAL (CZ2), IT, AFTER PASSING THROUGH AN OR GATE (HZ3, 6.13-2), IN CONJUNCTION WITH THE FAN 1 ENA SIGNAL (FZ6), WHICH ALSO PASSES THROUGH AN OR GATE (HZ3, 6.13-2), CLOCKS A FLIP-FLOP (FZ3, 6.13-2)

M. THE Q OUTPUT OF THIS FLIP-FLOP PROPAGATES THROUGH AN OR GATE TO AN INVERTER WHICH LETS THE CURRENT FLOW FROM THE VOLTAGE SOURCE THROUGH THE READY LIGHT (EZ3, 6.13-2), THEREBY ILLUMINATING IT

N. THE READY LIGHT IS EXTINGUISHED WHEN THE FAN 1 SHTDN OR THE SEP 1 RELAY OFF/ON SIGNALS (HZ2, 6.13-2) IN CONJUNCTION WITH THE SEP 1 SIGNAL (HZ2, 6.13-2) RESET THE FLIP-FLOP (FZ3, 6.13-2) THAT FIRST CAUSED THE LIGHT TO ILLUMINATE

URINAL FAULT LIGHT

O. IF A FAULT DOES OCCUR, THE FAULT FS 1 SIGNAL (FZ7) WILL BE ISSUED

P. THIS SIGNAL WILL GO THROUGH AN OR GATE (HZ2, 6.13-2) TO AN AND GATE (FZ1, 6.13-2). THE OTHER INPUT TO THAT AND GATE IS THE OUTPUT OF A NAND GATE (HZ1, 6.13-2) THAT WILL OUTPUT A 1 UNLESS BOTH FAN SEP FAULTS HAVE OCCURRED

Q. THE OUTPUT OF THE AND GATE (FZ1, 6.13-2) GOES THROUGH AN INVERTER WHICH ALLOWS THE CURRENT FROM THE VOLTAGE SOURCE THROUGH THE LIGHT, THEREBY ILLUMINATING IT

R. WHEN A SECOND FAULT OCCURS THE OUTPUT OF THE NAND GATE (HZ1, 6.13-2) WILL DROP TO ZERO MOMENTARILY EXTINGUISHING THE LIGHT

S. WHEN THE OUTPUT OF THE NAND GATE (HZ1, 6.13-2) DROPS, A CLOCK IS ALLOWED TO RUN WHICH SENDS PULSES THROUGH AN OR GATE (FZ1, 6.13-2) THROUGH AN INVERTER, THEREBY PRODUCING THE BLINKING EFFECT

NOTES: 1. SR FLIP-FLOP WITH DATA TRUTH TABLE

S	R	C	D	Q	*Q
1	0	X	X	1	0
0	1	X	X	0	1
0	0	X	X	UNSTABLE	
0	0	1	0	0	1
0	0	1	1	1	0
0	0	0	*	LAST VALUE	
1	1	X	X	NOT ALLOWED	

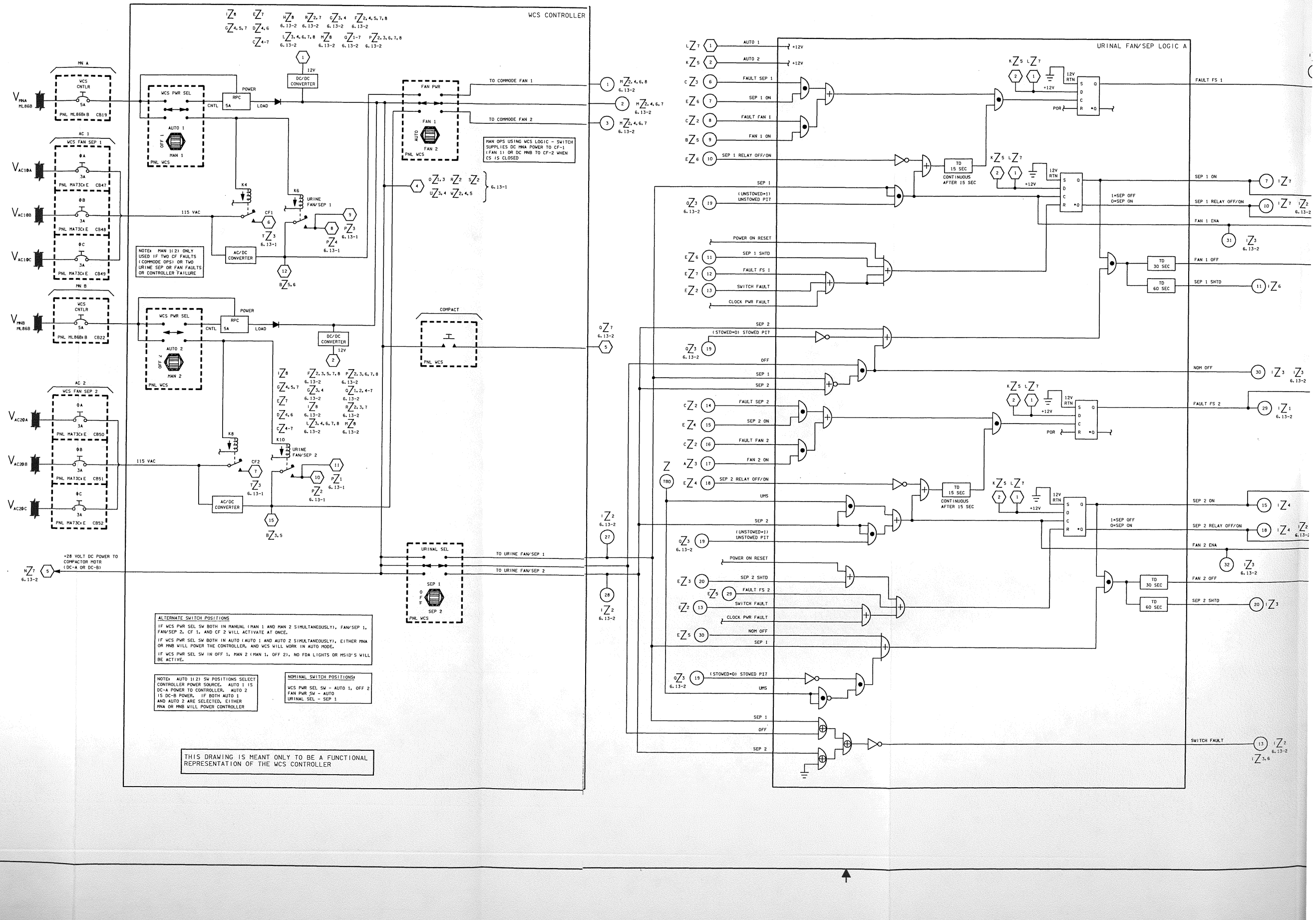

* 13 EDO WMS 3

NATIONAL AERONAUTICS AND SPACE ADMINISTRATION LYNDON B. JOHNSON SPACE CENTER HOUSTON, TEXAS		SIGNATURE	DATE
EDO WASTE MANAGEMENT		DSGN C. RILEY	10/26/93
		DR S. EGAN-MYER	1/04/93
		ENGR M. FITZPATRICK	
		ENGR	9/29/93
DWG NO 6.13	SPACE SHUTTLE	APP	10/5/93
	DV 10S	CADS S. K. Kimbrell	11-4-93
SHEET 3 OF 3 PAGE	82.5 X 34	LTR E IPCN 3	

BASIC REV E-3

DATE: 02/21/96	NAME: VSH	VERSION: BPT-5
DATE: 03/01/96	NAME: VSH	VERSION: BPT-6
DATE: 05/10/96	NAME: CAR	VERSION: INK-2

DSP
SYS PWR
SYS 2 MN B
ON
OFF
DS4

MID POWER CONTROLLER NO. 2 (MPC 2)
V_{MNB} AT
V_{MNB} MPC2
F30 10A
F31 10A
F38 10A
F39 10A
F36 10A
F37 10A
F32 10A
5.1K
PNL ATL
OFF ON
ON OFF
ATL(AGL) S2
$\sqrt{Z}$3 2.6-1

MID POWER CONTROLLER NO. 1 (MPC 1)
$\sqrt{Z}$7 2.6-1
V_{MNA} AT
V_{MNA} MPC1
F30 10A
F31 10A
F38 10A
F39 10A
F36 10A
F37 10A
F32 10A
5.1K
PNL ATL
OFF ON
S1

DEPRESS MAIN B
SYS 2
VENT ISOL
3A
PNL ATL(AGL) CB7

DEPRESS MAIN A
SYS 1
VENT ISOL
3A
PNL ATL(AGL) CB8

VESTIBULE DEPRESS VALVE
SYS 2
VENT ISOL
OP CL
OPEN
CLOSE
PNL ATL(AGL) S3
1.21K

VESTIBULE DEPRESS VALVE
SYS 2
VENT
OP CL
OPEN
CLOSE
PNL ATL(AGL) S8
1.21K

VESTIBULE DEPRESS VALVE
SYS 1
VENT ISOL
OP CL
OPEN
CLOSE
PNL ATL(AGL) S5
1.21K

VESTIBULE DEPRESS VALVE
SYS 1
VENT
OP CL
OPEN
CLOSE
PNL ATL(AGL) S6
1.21K

V64 X0145E OF3 VEST DEPRESS ISOL VLV 2 OPEN 1=OPEN 1 S/S
V64 X0146E OF3 VEST DEPRESS ISOL VLV 2 CLOSE 1=CLOSED 1 S/S
V64 X0147E OF4 VEST DEPRESS VLV 2 OPEN 1=OPEN 1 S/S
V64 X0148E OF4 VEST DEPRESS VLV 2 CLOSE 1=CLOSED 1 S/S
V64 X0141E OF2 VEST DEPRESS ISOL VLV 1 OPEN 1=OPEN 1 S/S
V64 X0142E OF2 VEST DEPRESS ISOL VLV 1 CLOSE 1=CLOSED 1 S/S
V64 X0143E OF2 VEST DEPRESS VLV 1 OPEN 1=OPEN 1 S/S
V64 X0144E OF2 VEST DEPRESS VLV 1 CLOSE 1=CLOSED 1 S/S

5.1K
1.21K
$\sqrt{Z}$5
$\sqrt{Z}$6
1320 LBM/HR @ ΔP = 14.7 PSID NON-PROPULSIVE (292.8 FT³/MIN, 8.8 M³/MIN)
VESTIBULE DEPRESS VALVE PACKAGE (LOCATED EXTERNAL TO VESTIBULE - SEE $\sqrt{Z}$5)

ODS VESTIBULE OVERBOARD

EQUALIZATION VALVE
- FLOWS 357.2 LBM/HR (79.2 FT³/MIN, 2.2 M³/MIN) AT ΔP = 14.7 PSID
PRESSURE PORT VALVE
CONTINGENCY HATCH EQUALIZATION PLUG
- FLOW 65.5 LBM/HR @ ΔP = 14.7 PSID (14.1 FT³/MIN, 0.39 M³/MIN)
- PLUG IS REMOVABLE ONLY FROM SHUTTLE SIDE OF HATCH
DM HATCH (APAS-2)
(HATCH OPENS INTO VESTIBULE)

DOCKING MODULE (DM)
SHUTTLE/VESTIBULE

V64 T0133A OF2 OF2 VESTIBULE TEMP 1 -75 TO +175°F 1 S/S
V64 T0134A OF3 OF2 VESTIBULE TEMP 2 -75 TO +175°F 1 S/S
VESTIBULE DEPRESS VALVE PACKAGE (SEE $\sqrt{Z}$6)
ODS HATCH
$\sqrt{Z}$5
V64 P0127A OF2 OF2 EXT AL/ VESTIBULE DELTA P -20 TO +20 PSIA 1 S/S
B-HATCH (OPENS INTO EXTERNAL AIRLOCK)
NEGATIVE PRESSURE RELIEF VALVES (2)* ONE ON EACH SIDE OF EXTERNAL A/L (SAME DESIGN AS THOSE ON SPACELAB TUNNEL)
V64 P0126A OF4 EXT AIRLOCK PRESS 0 TO 20 PSIA 1 S/S
MPCA 2 (DC MMB)
V64 T0132A OF2 OF2 EXT AIRLOCK TEMP 25 TO 130°F 1 S/S
D-HATCH (OPENS INTO EXTERNAL AIRLOCK)
SPACEHAB HATCH
EXTERNAL AIRLOCK

CABIN PAYLOAD BAY
$\sqrt{Z}$7 6.5
$\sqrt{Z}$6 6.13-1
X_0 = 576
FROM WCS VACUUM VENT
AIRLOCK DEPRESS VALVE
TO OVERBOARD VACUUM VENT
REMOVABLE FROST SCREEN
6 MESH
V64 P0102A OF1 OF1 AL DIFF PRESS 2 -20 TO +20 PSID 1 S/S
A-HATCH (OPENS INTO CREW COMPARTMENT)
INNER AIRLOCK HATCH
V64 T0131A OF1 OF1 AL WALL TEMP-PLD 25 TO 130°F 1 S/S
V64 T0130A OF1 OF1 AL WALL TEMP-TA 25 TO 130°F 1 S/S
V64 P0101A OF3 OF3 AL DIFF PRESS 1 -20 TO +20 PSID 1 S/S
INTERNAL AIRLOCK

EVA HATCH
C-HATCH (OPENS INTO TUNNEL ADAPTER)
D-HATCH (OPENS INTO TUNNEL ADAPTER)
TUNNEL ADAPTER HATCH
TUNNEL ADAPTER

TUNNEL EXTENSION

$\sqrt{Z}$2 SCREEN ADAPTER ASSY
TAPED OVER
AFT
ELBOW ASSY
$\sqrt{Z}$2 ADAPTER ASSY
CLAMP

△1 TUNNEL SEGMENTS ARE SPACELAB HARDWARE
△2 MIR EXTENSION DUCT IS ATTACHED AT THIS POINT, TO FLEX DUCT JUST BELOW HALO HARD-ATTACH POINT. THERE IS NO AIRFLOW TO HALO WHEN IN THIS CONFIG
△3 FLEX SECTION IS PRESENT ONLY IF MODULE (HAB OR LAB) IS FLOWN
△4 RESERVED
△5 PANEL LOCATION FOR ARLK/TNL FAN SW IS FLIGHT-CONFIG DEPENDENT. WHEN RMS IS FLOWN, PANEL NOMENCLATURE WILL BE A6L, WITHOUT RMS, PANEL WILL BE ATL
△10 ODS FLOOR FEATURES AIR HOLES AROUND THE PERIMETER, TO ALLOW AIR OUT FROM ODS ELECTRONICS. FIRE PORTS EXIST IN FLOOR THROUGH WHICH A HAND-HELD FIRE EXTINGUISHER MAY BE DISCHARGED
△D DETAILS ON THIS VALVE SHOW A MANUAL OVERRIDE CAPABILITY WITH THE MOTOR. THE MANUAL OVERRIDE PROTECTS AGAINST AN INADVERTENT OPENING OF THE MOTOR DRIVEN SECTION
△D ALL NEGATIVE PRESSURE RELIEF VALVES ARE OF SAME DESIGN
△D RESERVED
△G BOOSTER FANS ARE THE SAME TYPE AS ORBITER AV BAY FANS
△G FILTER MAY BE ACCESSED FOR CLEANING BY REMOVAL OF 20 BOLTS AND COVER
△G BOOSTER FANS A AND B MAY BE SWAPPED BETWEEN POSITIONS HOWEVER, THE BOOSTER FAN ASSEMBLY COVERING MUST BE REMOVED, REQUIRING THE REMOVAL OF 61 SCREWS
△G RESERVED
△W WARMER, DRYER MID-DECK AIR IS MIXED WITH COOLER, MORE MOIST AIR CABIN HX. A SPECIAL FITTING, ATTCHED TO THE MID-DECK A/T OUTLET, ALLOWS THIS TO OCCUR. SEE ALSO DWG 6.3-1 (AIRLOCK/ECLSS INTERFACES)

NOTES: △1 VESTIBULE DEPRESS VALVES ARE FUNCTIONALLY IDENTICAL TO ORBITER CABIN DEPRESS VALVES

14 EXT AIRLK ECLSS

SIGNATURE	DATE	NATIONAL AERONAUTICS AND SPACE ADMINISTRATION LYNDON B. JOHNSON SPACE CENTER HOUSTON, TEXAS
DSGN J. BLANCHARD	10/17/94	
DR		
ENGR S. TRIPODI		EXTERNAL AIRLOCK ECLSS
ENGR		
APP		
APP		SPACE SHUTTLE / DWG NO 6.14
CADS S.K. Kimbrell	6-17-96	ALL
LTR E PCN 6		126.5 X 34 PAGE SHEET 1 OF 1

BASIC REV E-6

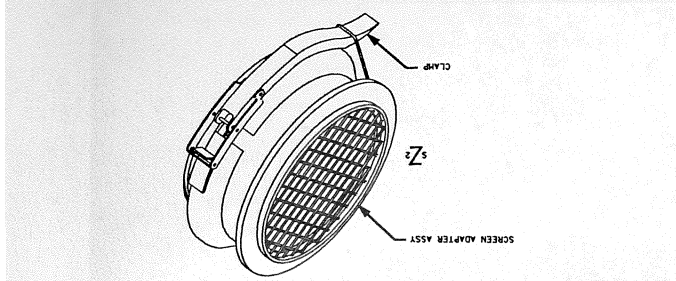

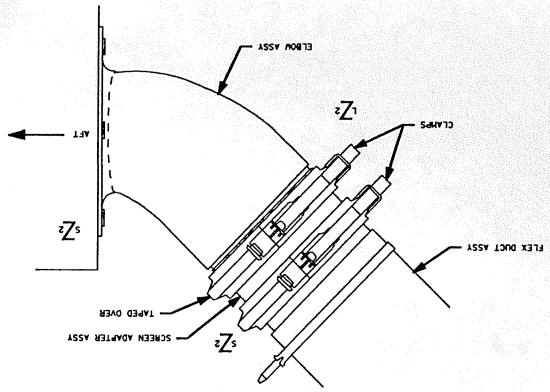

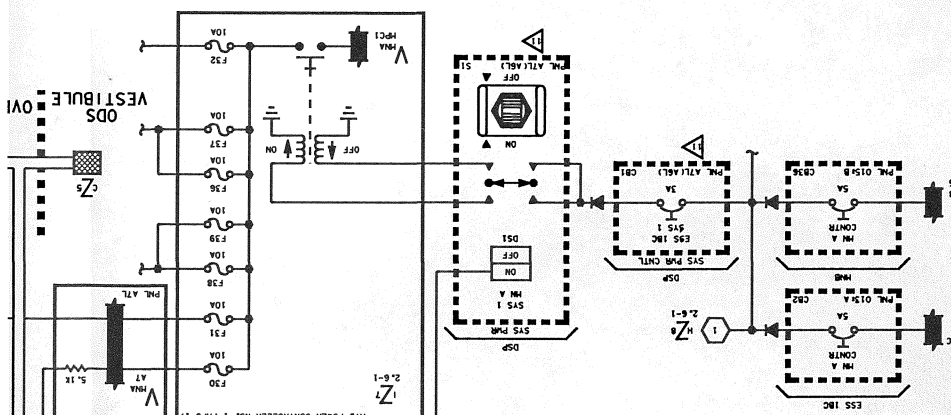

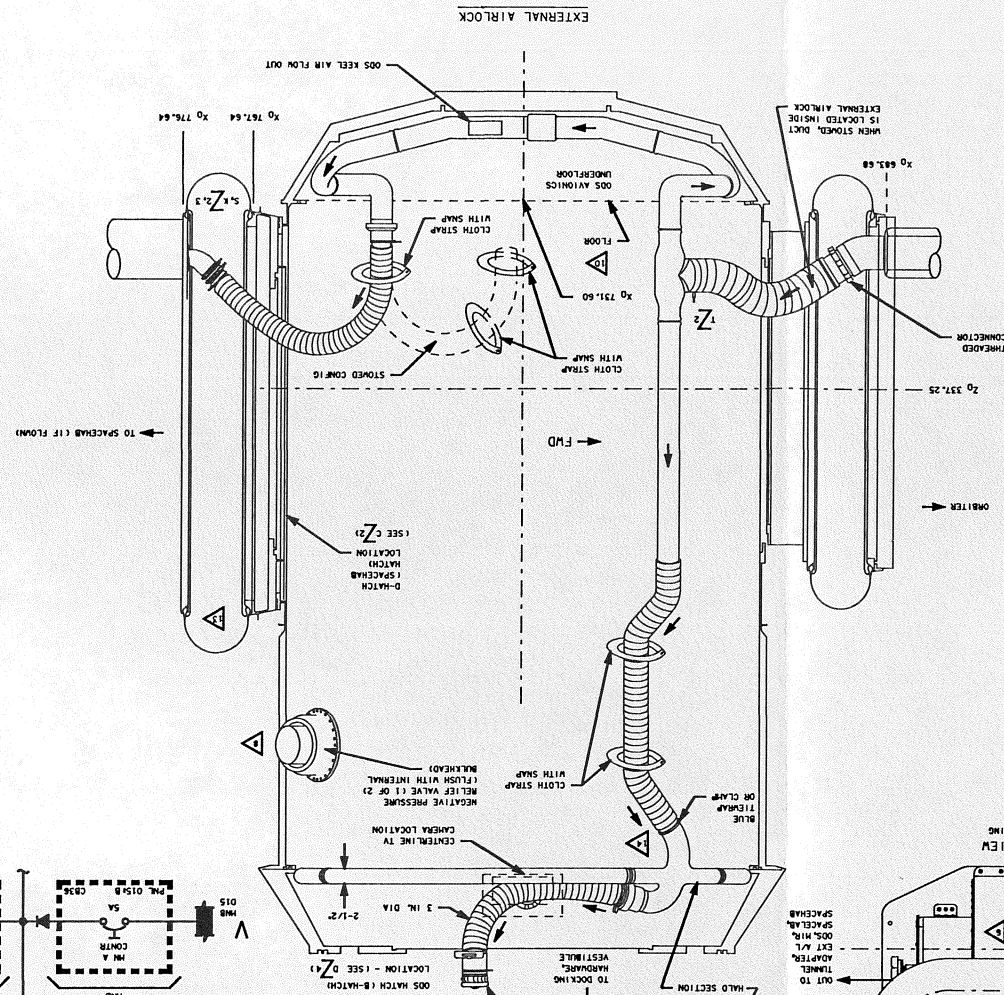

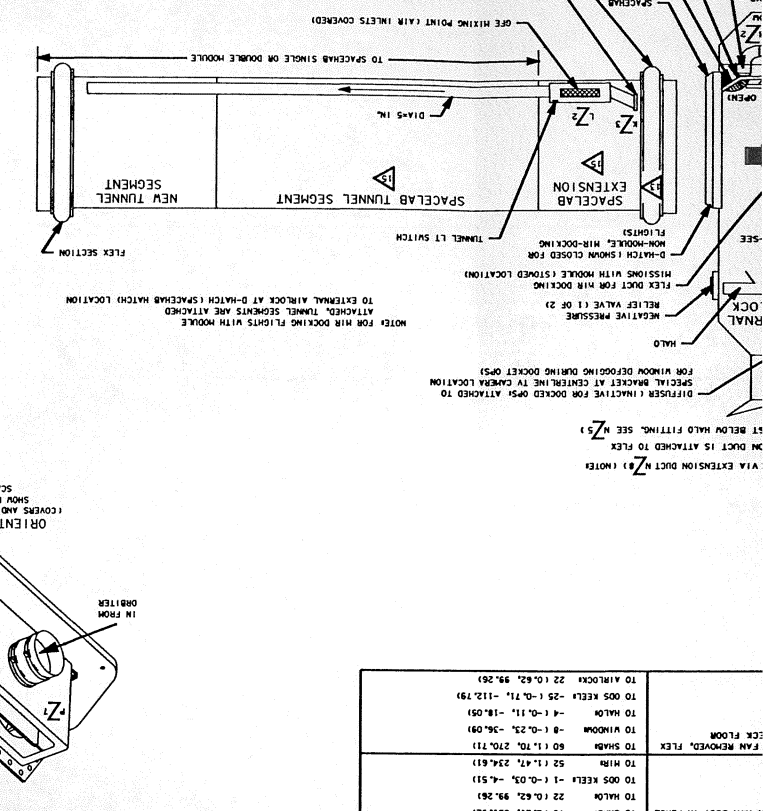

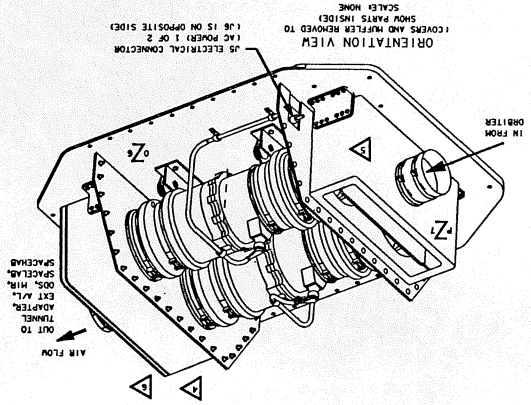

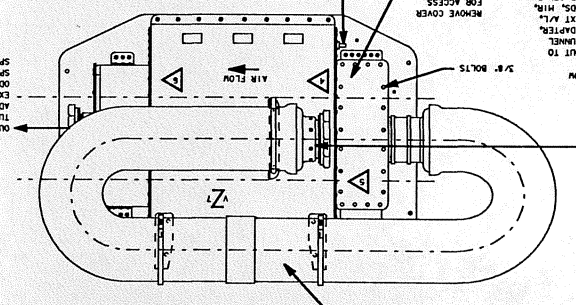

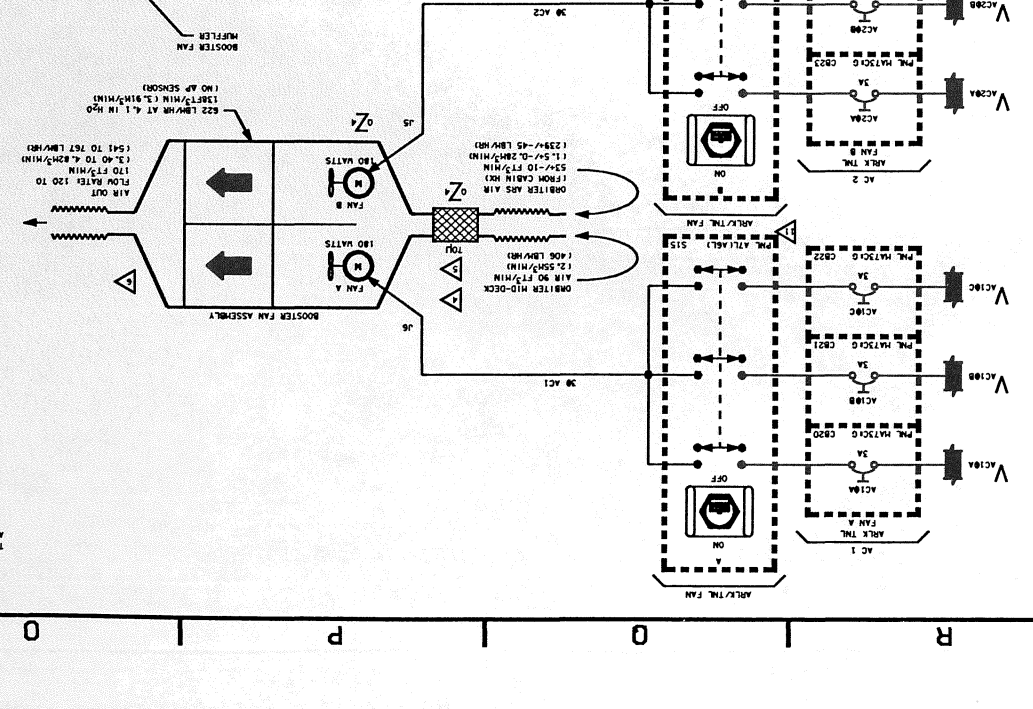

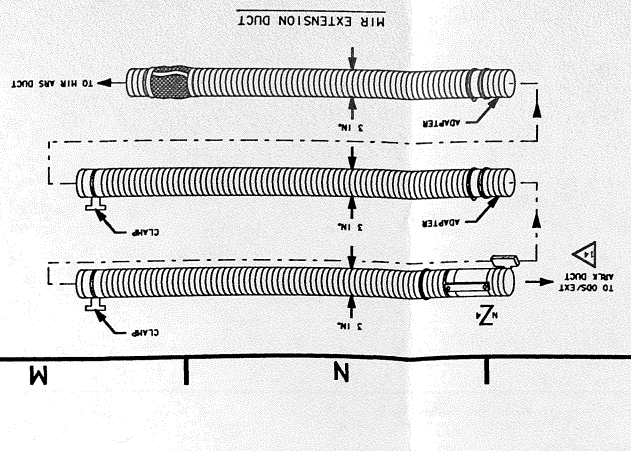

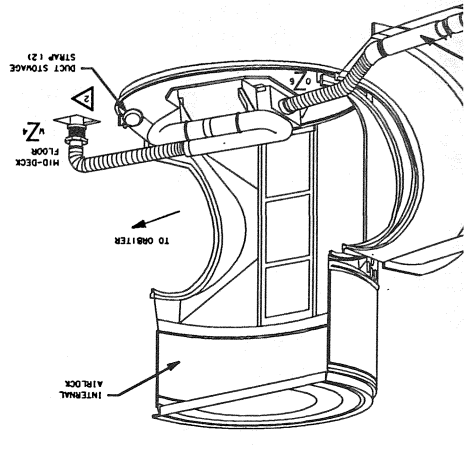

		AIRFLOW F?/MIN (M?/MIN, LBM/HR)	
DM FITTING		LOW/CONFINED AIR (FROM MID-DECK) 90 (2.55, 406)	
		CONFINED AIR (FROM CABIN-SIDE) 53 ± 10 (1.50 ± 0.28, 238 ± 45)	
LOOR FITTING		10 WINDOW 49 (1.39, 221.08)	
S HATCH NOT OPEN		10 HALO 30 (0.85, 135.35)	
		10 SIDE KEEL 57 (1.62, 257.17)	
LOOR FITTING		10 HALO 74 (2.10, 333.87)	
OOS HATCH NOT OPEN		10 SIDE KEEL 60 (1.70, 270.21)	
		10 SHARK 78 (2.21, 351.92)	
JT OPEN, WINDOW		10 WINDOW 0 (0, 0)	
		10 HALO 66 (1.87, 297.78)	
		10 SIDE KEEL 3 (0.09, 13.54)	*
		10 HALO 22 (0.62, 99.36)	
		10 SIDE KEEL -1 (-0.03, -4.51)	
		10 HIRM 52 (1.47, 234.61)	
		10 HALO -4 (-0.11, -18.05)	
		10 WINDOW -8 (-0.23, -36.09)	
FAN REMOVED, FLEX		10 SHARK 60 (1.70, 270.21)	
		10 HALO 22 (0.62, 99.36)	
		10 SIDE KEEL -25 (-0.71, -112.78)	
		10 AIRLOCK 22 (0.62, 99.36)	

VS DUCT AND HATCH CONFIGURATION

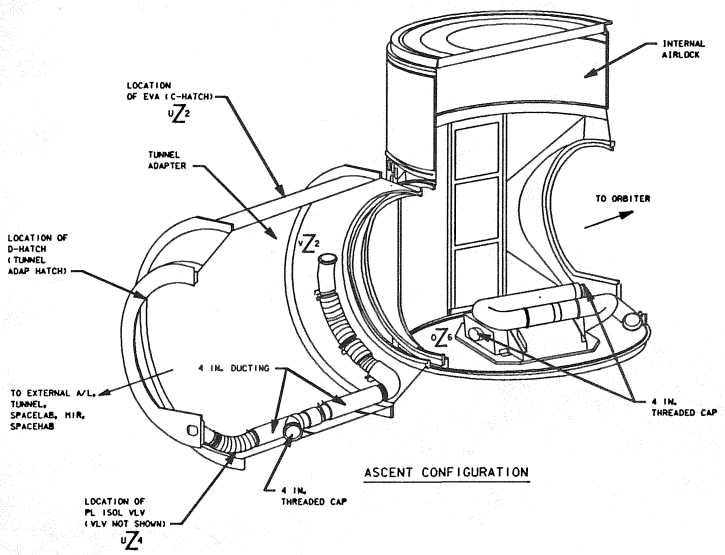

ASCENT CONFIGURATION

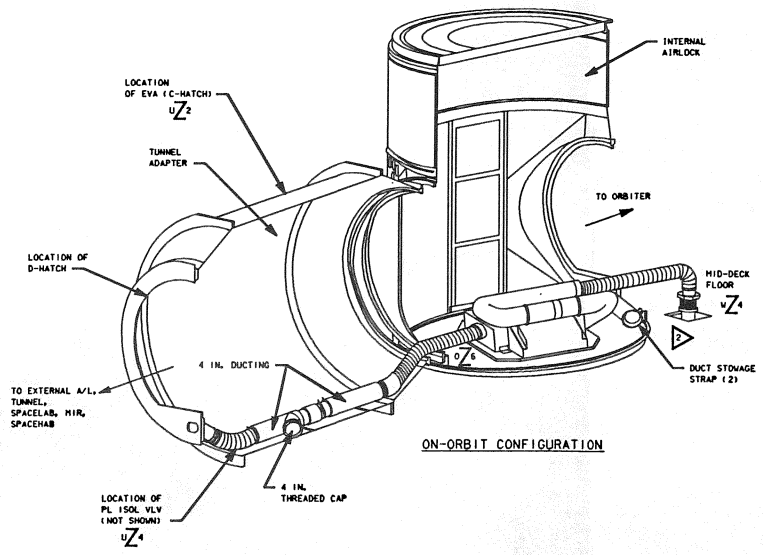

ON-ORBIT CONFIGURATION

AIRFLOW VS DUCT AND HATCH CONFIGURATION

DUCT AND HATCH CONFIGURATION	AIRFLOW FT³/MIN (M³/MIN, LBS/HR)
1. AIRFLOW THROUGH MID-DECK FLOOR FITTING	UNCONDITIONED AIR (FROM MID-DECK): 90 (2.55, 406)
	CONDITIONED AIR (FROM CABIN HX): 53 ± 10 (1.50 ± 0.28, 239 ± 45)
2. SHAB HATCH CLOSED, EXT A/L FLOOR FITTING CAPPED, WINDOW DUCT OPEN, ODS HATCH NOT OPEN	TO WINDOW: 49 (1.39, 221.08)
	TO HALO: 30 (0.85, 135.35)
	TO ODS KEEL: 57 (1.62, 257.17)
3. SHAB HATCH CLOSED, EXT A/L FLOOR FITTING CAPPED, WINDOW DUCT CLOSED, ODS HATCH NOT OPEN	TO HALO: 74 (2.10, 333.87)
	TO ODS KEEL: 60 (1.70, 270.71)
4. SHAB HATCH OPEN, ODS HATCH NOT OPEN, WINDOW SUPPLY BLOCKED	TO SHAB: 78 (2.21, 351.92)
	TO WINDOW: 0 (0, 0)
	TO HALO: 66 (1.87, 297.78)
	TO ODS KEEL: 3 (0.09, 13.54)
5. ALL HATCHES OPEN, SHUTTLE/MIR AIR DUCT IN PLACE	TO SHAB: 78 (2.21, 351.92)
	TO HALO: 22 (0.62, 99.26)
	TO ODS KEEL: -1 (-0.03, -4.51)
	TO MIR: 52 (1.47, 234.61)
6. EVA/10.2 ATM CONFIG: BOOSTER FAN REMOVED, FLEX DUCT STILL ATTACHED TO MID-DECK FLOOR (PROVIDING AIR TO AIRLOCK)	TO SHAB: 60 (1.70, 270.71)
	TO WINDOW: -8 (-0.23, -36.09)
	TO HALO: -4 (-0.11, -18.05)
	TO ODS KEEL: -25 (-0.71, -112.79)
	TO AIRLOCK: 22 (0.62, 99.26)

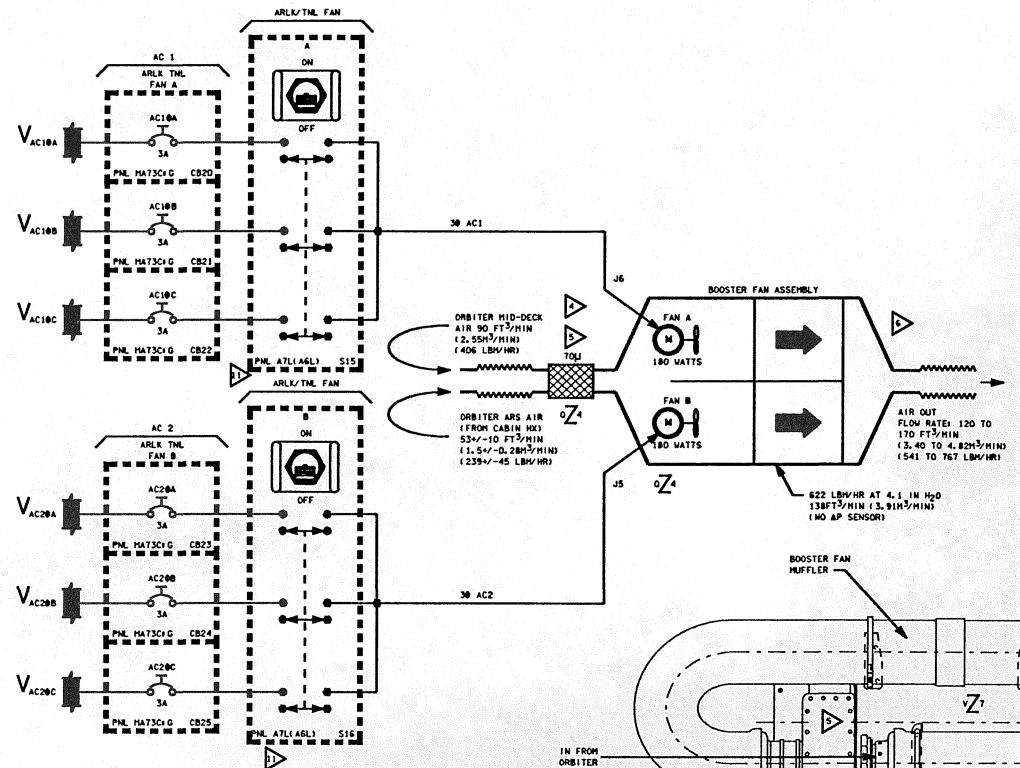

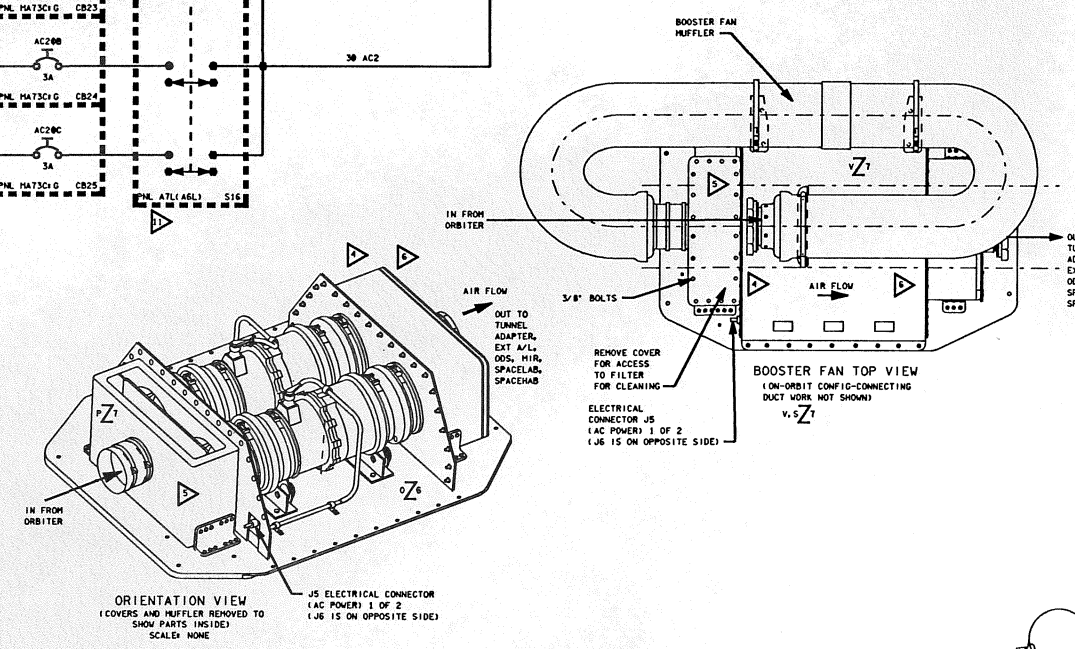

BOOSTER FAN TOP VIEW
(ON-ORBIT CONFIG-CONNECTING DUCT WORK NOT SHOWN)
V, S vZ1

ORIENTATION VIEW
(COVERS AND MUFFLER REMOVED TO SHOW PARTS INSIDE)
SCALE: NONE

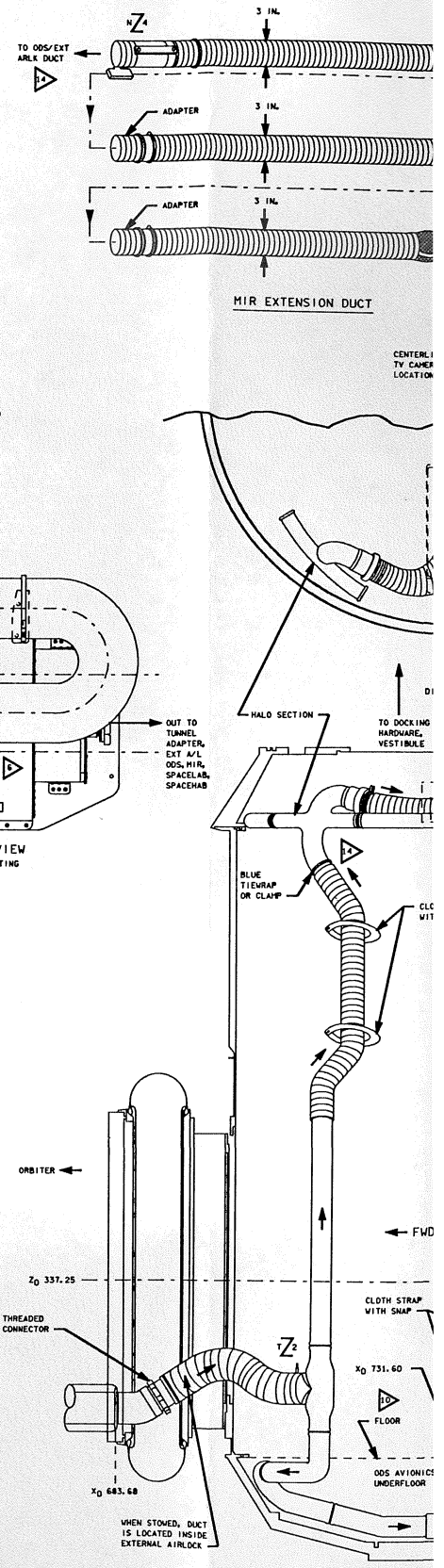

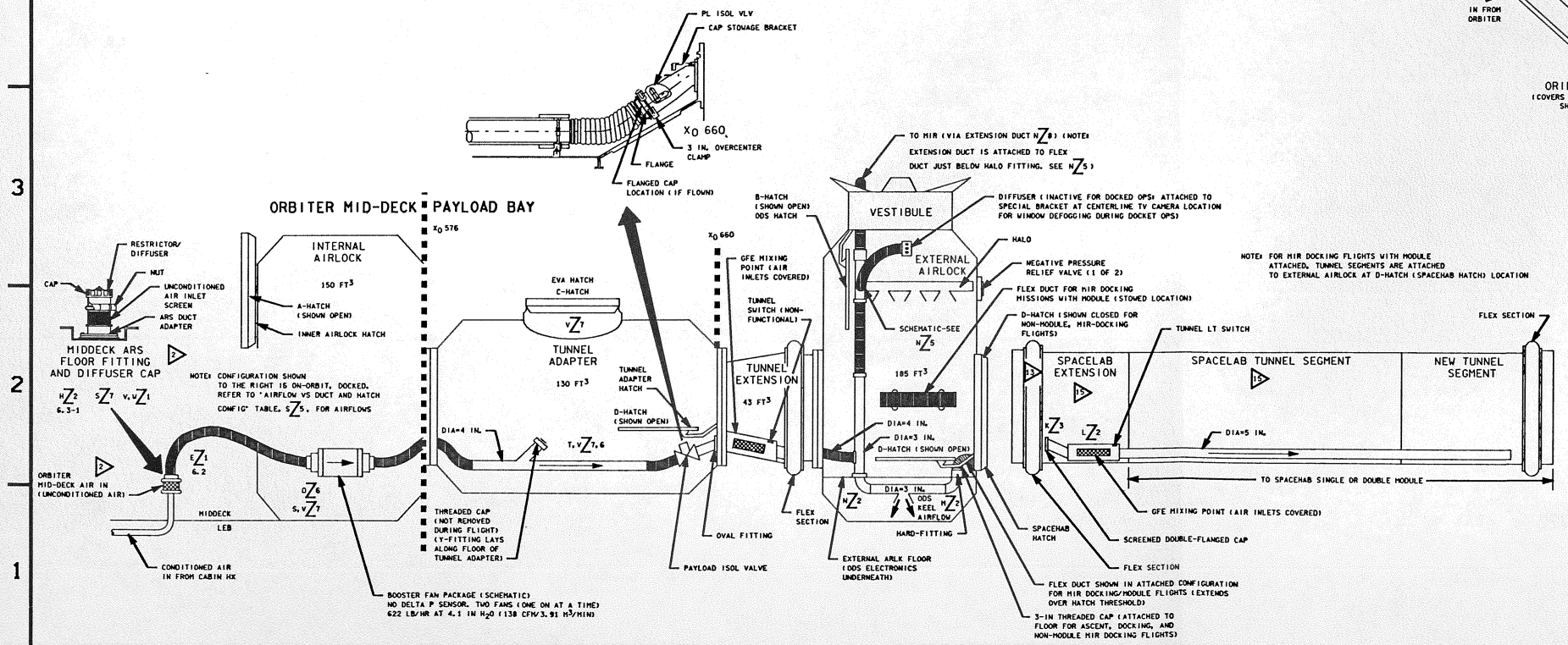

FOR DETAILED COMPONENT AND LOGIC INFORMATION REFER TO:

SSSH DWG NO.	SSSH DWG TITLE	VENDOR NAME	VENDOR DWG NO.	VENDOR SHEET NO.	REV	DATE	VENDOR DRAWING TITLE
6.1 (SHEETS 1 & 2)	PRESSURE CONTROL SYSTEM 1, 2	R. I.	VS70-960099	60BA	E	9/19/87	ARPCS - OXYGEN SUPPLY AND CABIN PRESSURE CONTROL
		R. I.	VS70-960099	60BB	E	9/19/87	ARPCS - NITROGEN SUPPLY
		R. I.	VS70-960099	60BC	E	9/19/87	ARPCS - OXYGEN PARTIAL PRESSURE CONTROL
		R. I.	V270-960099	60BE	E	9/19/87	ARPCS - OXYGEN SYSTEM INSTRUMENTATION
		R. I.	VS70-960099	B0BF	E	9/19/87	ARPCS - NITROGEN SYSTEM 1, 2, INSTR
		R. I.	VS70-960099	60BG	E	9/19/87	ARPCS - CABIN PRESSURE CONTROL INSTR
		R. I.	VS70-960099	60BH	E	9/19/87	MMU - FSS PORT
		R. I.	VS70-960099	60BJ	E	9/19/87	MMU - FSS STARBOARD
		R. I.	VS70-960099	60DA	E	9/19/87	AECS - AIRLOCK ENVIRONMENTAL CONTROL
		R. I.	VS70-960099	60DB	E	9/19/87	AECS - AIRLOCK ENVIRONMENTAL CONTROL 1
		R. I.	VS70-960099	60DC	E	9/19/87	AECS - AIRLOCK ENVIRONMENTAL CONTROL 2
		R. I.	VS70-960099	60DE	E	9/19/87	AECS - 0_2 EMERGENCY BREATHING
		R. I.	VS70-960102	60BA	E	3/8/85	ARPCS - OXYGEN SUPPLY & CABIN PRESSURE CONTROL
		R. I.	VS70-960102	60BB	E	3/8/85	ARPCS - NITROGEN SUPPLY
		R. I.	VS70-960102	60BC	E	3/8/85	ARPCS - OXYGEN PARTIAL PRESSURE CONTROL
		R. I.	VS70-960102	60BE	E	3/8/85	ARPCS - OXYGEN SYSTEM INSTRUMENTATION
		R. I.	VS70-960102	60BF	E	3/8/85	ARPCS - NITROGEN SYSTEM 1 & 2 INSTRUMENTATION
		R. I.	VS70-960102	60BG	E	3/8/85	ARPCS - CABIN PRESSURE CONTROL INSTRUMENTATION
		R. I.	VS70-960102	60DA	E	3/8/85	AECS - AIRLOCK ENVIRONMENTAL CONTROL SUBSYSTEM
		R. I.	VS70-960102	60DB	E	3/8/85	AECS - AIRLOCK ENVIRONMENTAL CONTROL SUBSYSTEM, PART 1
		R. I.	VS70-960102	60DC	E	3/8/85	AECS - AIRLOCK ENVIRONMENTAL CONTROL SUBSYSTEM, PART 2
		R. I.	VS70-960102	60DE	E	3/8/85	AECS - 02 EMERGENCY BREATHING
		R. I.	V070-613602		-	10/18/83	COVER - SENSOR, PP02, ASSY OF
		R. I.	V070-613130		G	4/18/82	ATMOSPHERIC REVITALIZATION PRESSURE CONTROL SYSTEM, CREW MODULE, INSTALLATION
		R. I.	V070-613156		D	5/6/83	PANEL ASSEMBLY - EMER BREATHING SYSTEM, MIDDECK
		R. I.	ME273-0126		F	6/20/85	UNION, FEMALE TO BRAZE/WELD, 17-4PH
		R. I.	V070-613103		A	9/22/77	PANEL - 02 TEST PORT
		R. I.	V594-613101		A	2/9/83	RESTRICTOR ASSY - EMERGENCY OXYGEN FLOW, CREW
		R. I.	ME251-0011		B	1/30/84	RESTRICTOR, OXYGEN, FLOW
		R. I.	V594-613102		A	2/10/83	TUBE ASSY. - RESTRICTOR, OXYGEN FLOW
		R. I.	V594-613103		A	2/10/83	TUBE - RESTRICTOR, OXYGEN FLOW
		R. I.	MD273-0025		B	3/15/84	UNION, BRAZED, CRES TUBE
		R. I.	MD273-0026		C	10/3/83	PREFORM, BRAZING ALLOY GOLD BASE
		R. I.	VS70-610106		-	3/28/88	SCHEMATIC DIAGRAM - ATMOSPHERIC REVITALIZATION SUBSYSTEM (OV-105 ONLY)
		R. I.	M072-643300		C	9/23/86	AIRLOCK IN ECLSS PROVISIONS TECH ORDER INSTL
		R. I.	VS70-613205			2/25/85	ATMOSPHERIC REVITALIZATION PRESSURE CONTROL SUBSYSTEM
		R. I.	VS70-613203		A	12/7/82	ATMOSPHERIC REVITALIZATION PRESSURE CONTROL SUBSYSTEM
		R. I.	V070-634465		G	2/5/87	MID-FUS SUBSYSTEM, ECLSS INSTL - FRAME X_a693 THRU X_a807
		R. I.	VS70-610209		E	5/2/84	SCHEMATIC DIAGRAM - ATMOSPHERE REVITALIZATION & PRESSURE CONTROL SYSTEM
		R. I.	V070-614100		B	6/26/84	OXYGEN RESTRICTOR, MID FUSELAGE, ASSEMBLY OF
6.2	ARS AIR	R. I.	VS70610109	ALL	E	3/23/88	SCHEMATIC DIAGRAM - ATMOSPHERE REVITALIZATION SUBSYSTEM
		R.I.	VS70-610102	ALL	J	3/8/88	SCHEMATIC DIAGRAM- ATMOSPHERE REVITALIZATION SUBSYSTEM
		R.I.	V070-613525	ALL	NONE	07/16/82	MUFFLER - SOUND ATTENUATION. INERTIAL MEASUREMENT UNIT INSTALLATION. ECLSS
		R.I.	V070-613552	ALL	B	4/7/88	FAM, MT EXCHR AND DUCTING INSTALLATION - IMU COOLING, ECLSS
		R.I.	V070-613400	ALL	D	5/18/88	DUCTING INSTALLATION - AVIONICS BAY'S I, II, & III, ECLSS
		R.I.	V070-613780	ALL	D	7/21/88	DUCTING INSTALLATION - AIR RETURN, FLIGHT DECK, ECLSS
		R.I.	V070-613760	ALL	D	5/24/85	DUCTING INSTALLATION AIR SUPPLY, FLIGHT DECK, ECLSS
		R.I.	V070-613650	ALL	B	07/31/85	DUCTING INSTALLATION - RETURN AIR, ECLSS BAY & MIDDECK
		R.I.	V070-613724	ALL	E	05/23/80	DUCTING INSTALLATION - SUPPLY AIR, ECLSS BAY & MIDDECK
		R.I.	V070-613170	ALL	A	10/29/84	DUCTING INSTALLATION - SLEEP STATION, ECLSS, AIR COOL ING DUCT AND DIFFUSER, MIDDECK

DWG	SIGNATURE		DATE
6.1	ENGR	M. FITZPATRICK	
	ENGR		10/1/90
6.2	ENGR	N. PAPALA	
	ENGR		10/1/90
	APP		10/3/90
	APP		
	LTR E	PCN	

NATIONAL AERONAUTICS AND SPACE ADMINISTRATION
LYNDON B. JOHNSON SPACE CENTER HOUSTON, TEXAS

VENDOR DRAWING REFERENCES

SPACE SHUTTLE
ALL

TBL NO 6-I

BASIC REV E

FOR DETAILED COMPONENT AND LOGIC INFORMATION REFER TO:

SSSH DWG NO.	SSSH DWG TITLE	VENDOR NAME	VENDOR DWG NO.	VENDOR SHEET NO.	REV	DATE	VENDOR DRAWING TITLE
6.3	AIRLOCK/ECLSS INTERFACES	R.I.	V075-64300				ECLSS A/L PANEL
		R.I.	V075-643021				PANEL-CLOSEOUT, A/L, ECLSS
		R.I.	V075-643022				PANEL-02 AND LCG, A/L, ECLSS, ASSY OF
		R.I.	V075-643024				PANEL ASSY-02 AND LCG, A/L, ECLSS
		R.I.	V075-643025				PANEL ASSY-H20, A/L, ECLSS
		R.I.	V075-730010				PANEL INSTALLATION-A/L, DISPLAYS AND CONTROLS
		R.I.	V075-730150				PANEL ASSY-AW18D, A/L, DISPLAYS AND CONTROLS
		R.I.	V075-730151				PANEL ASSY-AW18H, A/L, DISPLAYS AND CONTROLS
		R.I.	V075-730152				PANEL ASSY-AW18A, A/L, DISPLAYS AND CONTROLS
		R.I.	V075-730153				PANEL ASSY-AW82D, A/L, DISPLAYS AND CONTROLS
		R.I.	V075-740002				CABLE INSTL-COAX, ANTENNA UHF, EVA A/L
		R.I.	V075-750001				INSTR INSTL-DFI, A/L
		R.I.	M072-643300				AIRLOCK/ECLSS PROVISIONS
		R.I.	M072-643501				AIR SUPPLY DUCTING, AIRLOCK/TUNNEL ADAPTER, TECH ORDER INSTL. SPACEHAB
		R.I.	V075-750001				INSTRUMENTATION INSTL OF1, AIRLOCK
		R.I.	V519-634110				DUCT - AIRLOCK, AIR SUPPLY TUNNEL ADAPTER ASSY
		R.I.	M072-643500				ECLSS, ASSY, TUNNEL ADAPTER MV0519A TECH ORDER INSTALLATION
		IMPQUA	SV767709			2/7/85	BACTERIA FILTER
		HS	SV771717				CONDENSATE WATER REGULATOR
		HS	SV772190				WATER SUPPLY PRESSURE REGULATOR
		HS	SV778504				OXYGEN FILTER AND ORIFICE
		HS	SV784967				BACTERIA CARTRIDGE
		HS	SV784959				POTABLE WATER FILTER
		HS	SV771763				POTABLE WATER FILTER

DWG	SIGNATURE	DATE
6.3	ENGR S. DOERING	
	ENGR [signature]	10/13/95
	ENGR	
	ENGR	
	APP	
	APP	
	LTR E	PCN 3

NATIONAL AERONAUTICS AND SPACE ADMINISTRATION
LYNDON B. JOHNSON SPACE CENTER HOUSTON, TEXAS

VENDOR DRAWING REFERENCES

SPACE SHUTTLE | TBL NO 6-I
ALL

BASIC REV E-3

FOR DETAILED COMPONENT AND LOGIC INFORMATION REFER TO:

SSSH DWG NO.	SSSH DWG TITLE	VENDOR NAME	VENDOR DWG NO.	VENDOR SHEET NO.	REV	DATE	VENDOR DRAWING TITLE
6.4	SUPPLY WATER STORAGE	R. I.	VS70-623103	ALL	B	8/6/79	SCHEMATIC - ECLSS WATER MANAGEMENT SYSTEM
		R .I.	VS70-620309	ALL	E	3/7/89	SCHEMATIC DIAGRAM-WATER MANAGEMENT SUBSYSTEM
		R. I.	VS70-620302	ALL	J	12/6/83	SCHEMATIC DIAGRAM-WATER MANAGEMENT SUBSYSTEM
		R. I.	VS70-640109	ALL	B	6/2/83	SCHEMATIC DIAGRAM-AIRLOCK ENVIRONMENT CONT SUBSYSTEM
		R. I.	VS70-640102	ALL	E	8/16/80	SCHEMATIC-ACTIVE THERMAL CONTROL SUBSYSTEM
		R. I.	VO70 454936	ALL	F	11/2/87	FUEL CELL WATER RELIEF ALTERNATE PATH
		R. I.	VO70623300	ALL	C	8/4/87	INSTALLATION-ON2 PRESSURE/VENT PANEL, MIDDECK WATER MANAGEMENT SYSTEM
		R. I.	VS70-623201	ALL	C	8/8/79	HYDROGEN SEPARATOR AND TANK INSTL-POTABLE WATER, EXLSS EQUIP BAY
		R. I.	VO70-634460	ALL	H	6/15/88	MID-FUS SYBSYSTEM ECLSS INSTL-FRAME $X_0$582 THRU $X_0$693
		R. I.	VO70-623200	ALL	L	3/30/93	SYSTEM INSTALLATION - WATER MANAGEMENT, ECLSS EQUIPMENT BAY
6.5	WMS	R. I.	VS70-620202	ALL	L	11/20/89	SCHEMATIC DIAGRAM - WASTE MANAGEMENT SUBSYSTEM
		R. I.	VS70-620209	ALL	G	11/21/89	SCHEMATIC DIAGRAM - WASTE MANAGEMENT SUBSYSTEM
		R. I.	VO70-623200	ALL	J	3/10/88	SYSTEM INSTALLATION - WATER MANAGEMENT, ECLSS EQUIPMENT BAY
		R. I.	VO70-623300	ALL	C	3/4/87	INSTALLATION - GN2 PRESSURE/VENT PANEL, MIDDECK WATER MANAGEMENT SUSTEM
		R. I.	VS70-634460	ALL	H	6/15/88	MID-FUS SUBSYSTEM ECLSS INSTL-FRAME X_0 582 THRU X_0 693
		R. I.	VO70-623201	ALL	A	5/27/88	HYDROGEN SEPARATOR AND TANK INSTL-POTABLE WATER, ECLSS EQUIP BAY
		GE	630717539	ALL	A	06/21/85	WASTE COLLECTOR SUBSYSTEM SCHEMATIC

DWG	SIGNATURE	DATE	DWG	SIGNATURE	DATE
6.4	ENGR J. SOLOMON			ENGR	
	ENGR	9/26/94		ENGR	
6.5	ENGR S. TRIPODI			ENGR	
	ENGR	9/22/94		ENGR	
	ENGR			APP	
	ENGR			APP	
	ENGR			APP	
	ENGR			LTR E	PCN 4

NATIONAL AERONAUTICS AND SPACE ADMINISTRATION
LYNDON B. JOHNSON SPACE CENTER HOUSTON, TEXAS

VENDOR DRAWING REFERENCES

SPACE SHUTTLE	TBL NO 6-I
ALL	
	PAGE 6.I-3 SHEET 3 OF 9

BASIC REV E-4

FOR DETAILED COMPONENT AND LOGIC INFORMATION REFER TO:

SSSH DWG NO.	SSSH DWG TITLE	VENDOR NAME	VENDOR DWG NO.	VENDOR SHEET NO.	REV	DATE	VENDOR DRAWING TITLE
6.6	REPACKAGED GALLEY	NASA	SED39121058			9/24/90	SHUTTLE ORBITER REPACKAGED GALLEY
		NASA	SED39121045			9/19/90	INTERCONNECTION DIAGRAM, ORBITER GALLEY
		NASA	SED39120917		A	9/14/90	SCHEMATIC DIAGRAM, OVEN ASSEMBLY (A5) ORBITER GALLEY
		NASA	SED39121032			7/18/90	SCHEMATIC DIAGRAM, POWER ASSEMBLY (A6) ORBITER GALLEY
		NASA	SED39120899		B	7/6/90	WATER TANK ASSY - HOT WATER SYSTEM, GALLEY
		NASA	SED39121035		E	7/26/90	PLUMBING INSTL - GALLEY
		NASA	SED39121038			7/18/90	SCHEMATIC DIAGRAM, WATER HEATER ASSY (A7) ORBITER GALLEY

DWG	SIGNATURE	DATE	DWG	SIGNATURE	DATE
6.6	ENGR S. TRIPODI			ENGR	
	ENGR [signature]	9/24/94		ENGR	
	ENGR			ENGR	
	ENGR			ENGR	
	ENGR			APP [signature]	9/26/94
	ENGR			APP	
	ENGR			APP	
	ENGR			LTR E	PCN 4

NATIONAL AERONAUTICS AND SPACE ADMINISTRATION
LYNDON B. JOHNSON SPACE CENTER HOUSTON, TEXAS

VENDOR DRAWING REFERENCES

SPACE SHUTTLE | TBL NO 6-I
ALL

BASIC REV E-4

FOR DETAILED COMPONENT AND LOGIC INFORMATION REFER TO:

SSSH DWG NO.	SSSH DWG TITLE	VENDOR NAME	VENDOR DWG NO.	VENDOR SHEET NO.	REV	DATE	VENDOR DRAWING TITLE
6.8	ECLSS INSTRUMENTATION	R. I.	VS70-630109		H01	7/15/88	SCHEMATIC DIAGRAM- ACTIVE THERMAL CONTROL SUBSYSTEM
		R. I.	VS70-630102		V01	7/21/87	SCHEMATIC DIAGRAM- ACTIVE THERMAL CONTROL SUBSYSTEM
		R. I.	VS70-610109		E01	4/23/88	SCHEMATIC DIAGRAM- ATMOSPHERIC REVITALIZATION SUBSYSTEM
		R. I.	VS70-610102		J01	4/15/88	SCHEMATIC DIAGRAM- ATMOSPHERIC REVITALIZATION SUBSYSTEM
		R. I.	VS70-750209		H01	3/11/88	SCHEMATIC DIAGRAM- OI POWER AND CONTROL
		R. I.	VS70-750202		K01	3/10/88	SCHEMATIC DIAGRAM- OI POWER AND CONTROL
		R. I.	VS70-960099	60FY	A12	12/28/88	ATC FREON COOLANT LOOP 1 INSTRUMENTATION PART 1
		R. I.	VS70-960099	60FX	A12	12/28/88	ATC FREON COOLANT LOOP 2 INSTRUMENTATION PART 1
		R. I.	VS70-960099	60CJ	A12	12/28/88	ARS AVIONICS BAY 1 FAN CONTROL AND INSTRUMENTATION
		R. I.	VS70-960099	60CK	A12	12/28/88	ARS AVIONICS BAY 2 FAN CONTROL AND INSTRUMENTATION
		R. I.	VS70-960099	60CL	A12	12/28/88	ARS AVIONICS BAY 3 FAN CONTROL AND INSTRUMENTATION
		R. I.	VS70-960099	60CS	F03	9/19/87	ARS WATER COOLANT LOOP 1 INSTRUMENTATION PART II
		R. I.	VS70-960099	60CT	F03	9/19/87	ARS WATER COOLANT LOOP 2 INSTRUMENTATION PART II
		R. I.	VS70-960099	60CC	F03	9/19/87	ARS HUMIDITY CONDENSATE WATER SEPARATOR
		R. I.	VS70-960099	60CM	F03	9/19/87	ARS CABIN AIR CIRCULATION INSTRUMENTATION
		R. I.	VS70-960099	60CH	F03	9/19/87	ARS IMU COOLING
		R. I.	VS70-960102	60FV	F03	10/18/85	ATC FREON COOLANT LOOP 1 INSTRUMENTATION PART 1
		R. I.	VS70-960102	60FX	F03	10/18/85	ATC FREON COOLANT LOOP 2 INSTRUMENTATION PART 1
		R. I.	VS70-960102	60CJ	F04	8/31/89	ARS AVIONICS BAY 1 FAN CONTROL AND INSTRUMENTATION
		R. I.	VS70-960102	60CK	F04	9/8/89	ARS AVIONICS BAY 2 FAN CONTROL AND INSTRUMENTATION
		R. I.	VS70-960102	60CL	F04	9/12/89	ARS AVIONICS BAY 3 FAN CONTROL AND INSTRUMENTATION
		R. I.	VS70-960102	60CS	F03	10/18/85	ARS WATER COOLANT LOOP 1 INSTRUMENTATION PART II
		R. I.	VS70-960102	60CT	F03	10/18/85	ARS WATER COOLANT LOOP 2 INSTRUMENTATION PART II
		R. I.	VS70-960102	60CC	F03	10/18/85	ARS HUMIDITY CONDENSATE WATER SEPARATOR
		R. I.	VS70-960102	60CM	F04	9/14/89	ARS CABIN AIR CIRCULATION INSTRUMENTATION
		R. I.	VS70-960102	60CH	F03	10/18/85	ARS IMU COOLING

DWG	SIGNATURE	DATE
6.8	ENGR P. LAMCZYK	
	ENGR Philip C. Lamczyk	10/1/90
	ENGR	
	ENGR	
	APP Mark J. Ferring	10/26/90
	APP	
	OMNIPLAN	
	LTR E	PCN

NATIONAL AERONAUTICS AND SPACE ADMINISTRATION
LYNDON B. JOHNSON SPACE CENTER HOUSTON, TEXAS

VENDOR DRAWING REFERENCES

SPACE SHUTTLE | TBL NO 6-I
ALL

BASIC REV E

FOR DETAILED COMPONENT AND LOGIC INFORMATION REFER TO:

SSSH DWG NO.	SSSH DWG TITLE	VENDOR NAME	VENDOR DWG NO.	VENDOR SHEET NO.	REV	DATE	VENDOR DRAWING TITLE
6.9, 6.10	EMU INTEGRATED SYSTEM SCHEMATIC, EMU ELECTRICAL SCHEMATIC	HS	SV789200		A	10/27/88	PRIMARY LIFE SUPPORT SUBSYSTEM
		BRUNSWICK/ ARDE	SV778895/ SV784099				PRIMARY OXYGEN BOTTLE
		CONRAC/ GULTON	SV778528				PRIMARY OXYGEN PRESSURE SENSOR
		CARELTON CONTROLS	SV778873				PRIMARY PRESSURE CONTROL MODULE CHECK VLV FLOW RESTRICTOR SHUTOFF VLV SUIT PRESSURE REGULATOR WATER TANK PRESSURE REGULATOR
		CONRAC/ GULTON	SV767788				SUIT PRESSURE SENSOR (psid)
		HS	SV778540				SHEAR PLATE ASSY
		MICROSWITCH	SV789111				EVA POSITION SWITCH
		HS	SV785844				DUAL MODE RELIEF VLV BLEED ORIFICE DUAL MODE RELIEF VLV FEEDWATER CHECK VLV
		HS	SV771836				FLOW RESTRICTOR UNIT
		SENSORMEDICS	SV767798				VENT FLOW SENSOR
		HS	SV787994				CARBON DIOXIDE SENSOR FAN/PUMP/WATER SEPARATOR ASSY FAN ROTARY WATER SEPARATOR WATER PUMP BRUSHLESS MOTOR
		HS/MAG TECH	SV785900				PITOT ACTUATED VLV
		HS	SV769480				CO2 TRANSDUCER FILTER AND ORIFICE
		HS	SV772158				CHECK VLV
		HS	SV784996				PUMP INLET FILTER
		HS	SV778543				CHECK VLV AND HOUSING
		HS	SV767699				PRIMARY WATER TANK #1
		HS	SV769592				FEEDWATER SUPPLY PRESSURE SENSOR
		CONRAC/ GULTON	SV767793-5,-7				OXYGEN SIDE WATER SIDE
		HS	SV769403				CONDENSATE WATER RELIEF VLV
		HS	SV769404				FEEDWATER RELIEF VLV
		HS	SV792528				FEEDWATER PRESSURE REGULATOR
		ECKEL	SV767660-5,-4				FEEDWATER SHUTOFF VLV
		CONRAC/ GULTON	SV767793-6,-8				FEEDWATER PRESSURE SENSOR
		HS	SV792500				SUBLIMATOR AND HARNESS
		RDF	SV792503				TEMPERATURE SENSOR HARNESS
		HS	SV783850				SUBLIMATOR
		HS	SV784943				GAS TRAP
		HS	SV769405				WATER RELIEF VLV
		HS	SV769406				WATER CHECK VLV
		HS	SV785860				RELIEF VLV AND ORIFICE
		AIR-LOCK	SV787036				POSITIVE PRESSURE RELIEF VLV
		AIR-LOCK	SV785927				NEGATIVE PRESSURE RELIEF VLV
		HS	SV769592				RESERVE WATER TANK
		HS	SV785970				CAUTION AND WARNING
		HS	SV789151				ELECTRICAL POWER HARNESS
		HS	SV789152				ELECTRICAL SIGNAL HARNESS
		HS	SV789153				CAUTION AND WARNING HARNESS
		HS	SV777266				FIBER OPTIC CONVERTER AND CONNECTOR
		HS	SV789134				REAL -TIME DATA SYSTEM HARNESS
		ILC	SV772168				PLSS/SOP THERMAL COVER
		HS	SV769592				PRIMARY WATER TANK #2
		HUGHES/ TRIETLER/HS	SV785890				MUFFLER
		HS	SV784998				COOLANT ISOLATION VLV ASSY
		ECKEL	SV784982				WATER SHUTOFF VLV
		HS	SV784985				COOLANT RELIEF VLV
		HS	SV791230				SIGNAL CONDITIONER (RTDS)
		ILC	0101-10001		N	11-21-85	COMMUNICATIONS CARRIER ASSY (CCA)
		ILC	0102-10002		BL	2-6-88	HARD UPPER TORSO (HUT)
		ILC					HARD TORSO SHELL
		ILC	SV772325				EXTRA SMALL
		ILC	SV772335				SMALL
		ILC	SV772345				MEDIUM
		ILC	SV772375				LARGE
		ILC	SV772385				EXTRA LARGE

DWG	SIGNATURE	DATE	NATIONAL AERONAUTICS AND SPACE ADMINISTRATION LYNDON B. JOHNSON SPACE CENTER HOUSTON, TEXAS
6.9	ENGR S. BLEISATH		
	ENGR Scott A Bleisath	11-1-90	
6.10	ENGR C. LOWERY		**VENDOR DRAWING REFERENCES**
	ENGR C. Lowery	11-2-90	
	APP	6 Nov 90	
	APP RT Neal	11/6/90	SPACE SHUTTLE / TBL NO 6-I
	OMNIPLAN		ALL
	LTR E / PCN		PAGE 6.I-6 / SHEET 6 OF 9

BASIC REV E

FOR DETAILED COMPONENT AND LOGIC INFORMATION REFER TO:

SSSH DWG NO.	SSSH DWG TITLE	VENDOR NAME	VENDOR DWG NO.	VENDOR SHEET NO.	REV	DATE	VENDOR DRAWING TITLE
6.9, 6.10 (CONT'D)		ILC	0103-10003		AW	3-26-87	ARMS
		ILC	0103-84025				UPPER ARM ASSY
		ILC	0103-84026				LOWER ARM ASSY
		ILC	0104-10004		CE	10-19-87	LOWER TORSO ASSY
		ILC	0104-82347				WAIST RESTRAINT/BLADDER ASSY
		ILC	0104-84402				WAIST RESTRAINT/BLADDER ASSY
		ILC	0104-84811				WAIST RESTRAINT AND BLADDER
		ILC	0104-82692				WAIST TMG
		ILC	0104-84386				WAIST TMG
		ILC	0104-84905				WAIST TMG
		ILC	0104-84027				TROUSER
		ILC	0104-84028				BOOT ASSY
		ILC	0104-82664				BOOT SIZING INSERT
		ILC	9785, 9787				BODY SEAL CLOSURE
			9789,9791				
		ILC	9698,9699, 9714				WAIST BEARING
		ILC	0105-10005		T	10-19-87	HELMET
		ILC	0106-10006/		BJ	12-8-87	GLOVES
			1600		K	10-19-87	
		ILC	0107-10007		AU	2-19-85	LIQUID COOLING AND VENT GARMENT (LCVG)
		ILC	0107-81057				BOOT LEG VENT DUCT
		ILC	0107-84029				GARMENT ASSY
		ILC	0108-10008		W	09-24-86	EXTRAVEHICULAR VISOR ASSY
		ILC	0110-10010		AF	10-19-87	IN SUIT DRINK BAG
		HS	SV767710		E	10-4-88	SECONDARY OXYGEN PACK
		FANSTEEL	SV778880				SECONDARY OXYGEN BOTTLE
		CARELTON CONTROLS	SV778475				SOP PRESSURE CONTROL MODULE
		KULITE	SV778473				SOP PRESSURE TRANSDUCER
		HS	SV792294		A	10-4-88	DISPLAYS AND CONTROLS MODULE
		KRATOS	SV767706				SUIT PRESSURE GAUGE
		AIR-LOCK	SV787027				PURGE VLV
		HS	SV789693				TEMP CONTROL VLV
		AIR-LOCK	SV778872-10				COMMON MULTIPLE CONNECTOR
		HS	SV792294				ELECTRONIC ASSY
		LITTON	SV767784				VOLUME CONTROL
		LITTON	SV767785				DISPLAY INTENSITY CONTROL
		ARMTEC	SV767786				EVC MODE SELECTION SWITCH
		HEWLETT PACKARD	SV789695				BITE INDICATOR
		HS	SV792293				INTERNAL WIRING ASSY
		HS	SV774161				EXTERNAL WIRING ASSY
		HAYDON	SV778596				POWER MODE SELECTION SWITCH
		ARMTEC	SV767794				PUSH TO TALK SWITCH
		ARMTEC	SV771887-2				FAN SWITCH
		ARMTEC	SV767795-2				FEEDWATER VALVE SWITCH
		ARMTEC	SV767792				CAUTION AND WARNING SYSTEM SWITCH
		HEWLETT	SV791145				ALPHANUMERIC DISPLAY (LCD)
		HS	SV779301				OXYGEN, WATER MANIFOLD ASSY
		ILC	SV771987-11				DCM THERMAL COVER
		HS	SV767730			2-7-85	SERVICE AND COOLING UMBILICAL
		AIR-LOCK	SV778872-11				COMMON MULTIPLE CONNECTOR
		TITEFLEX	SV778865				O2 HIGH PRESSURE LINE
		TITEFLEX	SV771722				WATER LINE
		TITEFLEX					POTABLE WATER LINE
		TITEFLEX					COOLING WATER LINE
		TITEFLEX					COOLING WATER OUT-LINE
		IMPQUA	SV767709				BACTERIA FILTER
		HS	SV771717				CONDENSATE WATER REGULATOR
		HS	SV772190				WATER SUPPLY PRESSURE REGULATOR
		HS	SV778504				OXYGEN FILTER AND ORIFICE
		HS	SV784967				BACTERIA CARTRIDGE
		HS	SV784959				POTABLE WATER FILTER
		HS	SV771763				SCU ELECTRICAL HARNESS
		DEUTSCH	SV764255				VEHICLE ELECTRICAL CONNECTOR
		GLENAIR	SV787944				CONNECTOR BACKSHELL
		AIRCLOCK	SV785003				SCU ELECTRICAL CONNECTOR
		GFP	SV771749				SHEATH ASSY
		GFP	SV729617				SHEATH HOOK
		GFP	SV772134				TETHER SHACKLE
		HS	SV767690				EMU ELECTRICAL HARNESS (EEH)
		HS	SV767680				AIRLOCK ADAPTER
		HS	SV792600		J	11-30-87	CONTAMINANT CONTROL CARTRIDGE (CCC)

DWG	SIGNATURE		DATE
6.9	ENGR	S. BLEISATH	
	ENGR	Scott A Bleisath	11-1-90
6.10	ENGR	C. LOWERY	
	ENGR	C. Lowery	11-2-90
	APP	[illegible]	6 Nov 90
	APP	RT Neal	11/6/90
	OMNIPLAN		
	LTR E	PCN	

NATIONAL AERONAUTICS AND SPACE ADMINISTRATION
LYNDON B. JOHNSON SPACE CENTER HOUSTON, TEXAS

VENDOR DRAWING REFERENCES

SPACE SHUTTLE	TBL NO 6-I
ALL	

BASIC REV E

FOR DETAILED COMPONENT AND LOGIC INFORMATION REFER TO:

SSSH DWG NO.	SSSH DWG TITLE	VENDOR NAME	VENDOR DWG NO.	VENDOR SHEET NO.	REV	DATE	VENDOR DRAWING TITLE
6.9, 6.10 (CONC'D)		YARDNEY	SV767789 SVSK94600		F	10-21-86	BATTERY DCM: ELECTRICAL SCHEMATIC DRAWING (BLUE PRINT)
		HS	SV792740 SV792695 SV792696		G	8-31-88	BENDS TREATMENT ADAPTER PRESSURE GAUGE PRESSURE RELIEF VALVE
6.11	MMU/FSS PROPULSION	MARTIN MARIETTA (M.M.)	ML2050				THERMAL HEATER, TEMP SENSOR ASSY.
		M. M.	MP0030				LINE ASSEMBLY
		M. M.	MP0035				LINE ASSEMBLY
		M. M.	MP0080				RH GAGE LINE ASSEMBLY
		M. M.	MP0085				LH GAGE LINE ASSEMBLY
		M. M.	MP0130				RH FWD TRIAD LINE ASSEMBLY
		M. M.	MP0135				LH FWD TRIAD LINE ASSEMBLY
		M. M.	MP0140				RH AFT TRIAD LINE ASSEMBLY
		M. M.	MP0145				LH AFT TRIAD LINE ASSEMBLY
		M. M.	MP0160				RH TOGGLE/GAGE TO TANK LINE ASSEMBLY
		M. M.	MP0165				LH TOGGLE/GAGE TO TANK LINE ASSEMBLY
		M. M.	MP0445				QUICK DISCONNECT ASSEMBLY
		M. M.	MP0170				FILTER/VALE ASSEMBLY
		M. M.	MP0175				PRESSURE TRANSDUCER ASSY
		M. M.	MP0260				RH TANK TO ISO VALVE LINE ASSY
		M. M.	MP0265				LH TANK TO ISO VALVE LINE ASSY
		M. M.	MP0270				TANK OUTLET ADAPTER ASSY
		M. M.	MP0280				RH MANIFOLD ASSEMBLY
		M. M.	MP0285				LH MANIFOLD ASSEMBLY
		M. M.	MP0368				GAGE DETAILS
		M. M.	MP0443				BRACKET
		M. M.	MT0131				SUPPORT BRACKET DETAILS
		M. M.	MT0150				UPPER SUPPORT BRACKET ASSY
		M. M.	ME2000				PRESSURE GAGE ILLUMINATION ASSY
		M. M.	MP0000				PROPULSION INSTALLATION
		M. M.	FP0000				FSS PROPULSION INSTALLATION
		M. M.	PD4800209				QUICK DISCONNECT
		M. M.	FP0034				TUBE ASSEMBLY
		M. M.	FP0092				TUBE
		M. M.	FP0099				FILTER THERMO SPACER
		M. M.	FP0110				TUBE ASSEMBLY

DWG	SIGNATURE	DATE	DWG	SIGNATURE	DATE
6.9	ENGR S. BLEISATH			ENGR	
	ENGR Scott A Bleisath	11-8-90		ENGR	
6.10	ENGR C. LOWERY			ENGR	
	ENGR C Lowery			ENGR	
6.11	ENGR S. BLEISATH			APP	15 Nov 90
	ENGR Scott A Bleisath	11-8-90		APP R T Neal	11/16/90
	ENGR			OMNIPLAN	
	ENGR			LTR E PCN	

NATIONAL AERONAUTICS AND SPACE ADMINISTRATION
LYNDON B. JOHNSON SPACE CENTER HOUSTON, TEXAS

VENDOR DRAWING REFERENCES

SPACE SHUTTLE ALL

TBL NO 6-1

PAGE 6.1-8 SHEET 8 OF 9

BASIC REV E

FOR DETAILED COMPONENT AND LOGIC INFORMATION REFER TO:

SSSH DWG NO.	SSSH DWG TITLE	VENDOR NAME	VENDOR DWG NO.	VENDOR SHEET NO.	REV	DATE	VENDOR DRAWING TITLE
6.12	RCRS	HS	-	-	-	3/15/91	HS CDR
		RI	VO70-730384	-	-	11/8/90	PANEL ASSEMBLY - M051F
		RI	VO70-733882	-	-	2/13/90	SCHEMATIC DIAGRAM D&C PANEL M051F
		RI	VS70-610302	-	-	2/3/90	SCHEMATIC DIAGRAM
6.13 (SHEETS 1 - 3)	WASTE MANAGEMENT SYSTEM	HS	SV805199	1	B	7/20/90	DRIVE, COMMODE COMPACTOR
			SV805318	1	B	8/16/90	COVER, CANISTER FILTER
			SV805319	1	B	7/18/89	FILTER, BACTERIA, PLENUM
			SV805321	1	C	1/23/90	MOTOR, URINE SEPARATOR
			SV805324	1	B	8/24/90	FILTER, ODOR/BACTERIA, URINAL
			SV805333	1	A	4/19/90	VALVE, CHECK, CAS
			SV805334	1	B	1/30/90	CHECK VALVE, DUAL
			SV805340	1	A	12/1/89	RETAINING RING, PLENUM
			SV805342	1	B	1/13/90	RING, NUT, CANISTER
			SV805357	1	-	12/21/89	SWITCH, LIMIT SENSITIVE
			SV805378	1	C	1/18/90	MOTOR ASSY, FAN
			SV805380	1	A	1/31/90	MOTOR ASSY, SEPARATOR
			SV805396	1	A	8/24/90	FILTER, ODOR/BACTERIA, COMMODE
			SV807455	1 - 3 OF 4	-	3/29/90	TUBE ASSEMBLY, TRANSPORT
			SV807470	1	-	6/20/90	RUNNER, PISTON
			SV807583	1	-	7/23/90	YOKE, SLIDE
			SV809710	1	-	-	TUBE, TRANSPORT
			SVL16993	1 - 4 OF 4	A	9/15/89	SEPARATOR, URINE
			SVL16995	3 - 5 OF 5	B	10/20/89	TRANSPORT TUBE ASS'Y
			SVL16995	1 - 6 OF 6	-	10/21/89	COMMODE INLET, BAG, SEAT RETENTION
			SVL17094	1	-	-	COMPACTOR ASS'Y, WCS
			SVL17094	2 - 3 OF 3	-	-	COMPACTOR DETAILS
			SVL17145	1 - 2 OF 2	D	2/15/90	STATIONARY TRANSPORT TUBE ASS'Y, WCS
			SVL17230	-	-	3/23/90	PISTON, COMPACTOR SUBASS'Y
			SVL17230	1	A	3/26/90	PISTON, COMPACTOR SUBASS'Y
			SVL17282	1 OF 1	B	-	URINE SEP GSE TUBING
			SVL17297	1	-	7/31/90	SEAT & LID ASS'Y WCS
			SVL17363	1	-	-	PLUMBING, URINAL INLET & OUTLET
			SVL17366	1	A	-	ODOR/BACTERIA FILTERS, URINE AND COMMODE - WASTE COLLECTION SUBSYSTEM
			SVL17367	-	-	-	COMMODE TUBES

DWG	SIGNATURE		DATE
6.12	ENGR P. LAMCZYK		
	ENGR		2/17/93
6.13	ENGR S. TRIPODI		
	ENGR		2/17/93
	APP		2/19/93
	APP		
	OMNIPLAN		
	LTR E	PCN 2	

NATIONAL AERONAUTICS AND SPACE ADMINISTRATION
LYNDON B. JOHNSON SPACE CENTER HOUSTON, TEXAS

VENDOR DRAWING REFERENCES

SPACE SHUTTLE | TBL NO 6-I

ALL

PAGE 6.I-9 | SHEET 9 OF 9

BASIC REV E-2

DATE: 05/04/91	NAME: VSH	VERSION: BPT, 11
DATE: 05/17/91	NAME: MAG	VERSION: INK, 8
DATE: 10/21/91	NAME: JDF	VERSION: INK, 9

FLASH EVAP SUBSYSTEM
SEE DRAWING NO. 7.3

V63 T1207A (V63T1407A) (0A3) 0A2 0A2 (0A3)
FCL 1 EVAP OUT TEMP
25 TO 130° F
1 S/S
C&W

0.718" ID

CONDITIONED O_2 REQUIREMENTS
TEMP 0 TO 70° F
FLOW 0 TO 23.9 LB/HR

OXYGEN RESTRICTOR

OXYGEN SYSTEM 1 (FCL 2 HAS TWO-12.5 LB/HR O_2 RESTRICTORS, BOTH CONDITION OXYGEN SYSTEM 2)

O_2 INLET CONDITIONS
TEMP -280 TO 220° F

FLOW RATE ≈ 88% OF TOTAL FLOW

FLOW RATE ORIFICE-0.24" ID ≈ 12% OF TOTAL FLOW

V63 R1105A (V63R1305A) (0A3) 0A1 N/A
FCL 1 (2) COLD PLATE NETWORK FLOW RATE
100 TO 500 LB/HR
1 S/S
F

V_{MNC} APC6

$V_{CNTLCA1}$ RPC 5A 1A FCL 2

N/G 17.1

OV-102, 105 FCL 1 RPC 5A POWERED BY: MNB APCS AND CNTLBC2

AFT AVIONICS BAY 6 COLDPLATES

BAY 6 COLDPLATES: (MAX LD 665 W, 2270 BTU/HR)
ULLAGE PRESS S/C NO. 3
ΔP S/C REAR
ASA NO. 3
DSC OA3
OA-3 MDM
FA-3 MDM
ATVC NO. 3
LA MDM
APU CONT NO. 3
ATVC NO. 4
MCA NO. 3
EIU NO. 3
LCA NO. 3
PCA NO. 6
PCA NO. 3
RJDA 2
ASA NO. 4
FA-4 MDM
RGA NO. 3, 4

AFT AVIONICS BAY 5 COLDPLATES

BAY 5 COLDPLATES: (MAX LD 604 W, 2061 BTU/HR)
ULLAGE PRESS S/C NO. 2
DSC OA2
ASA NO. 2
PT SENS
DBIA NO. 2
OA-2 MDM
MEC NO. 2
FA-2 MDM
APU CONT NO. 2 LCA NO. 2
ATVC NO. 2 PCA NO. 5
MCA NO. 2 PCA NO. 2
EIU NO. 2 RGA NO. 2

AFT AVIONICS BAY 4 COLDPLATES

BAY 4 COLDPLATES: (MAX LD 662 W, 2260 BTU/HR)
ULLAGE PRESS S/C NO. 1
DBIA NO. 1
RJDA 1
ASA NO. 1
DSC OA1
FA-1 MDM
MEC NO. 1
OA-1 MDM
APU CONT NO. 1
ATVC NO. 1
MCA NO. 1
EIU NO. 1
LCA NO. 1
PCA NO. 4
PCA NO. 1
RGA NO. 1

V63 T1206A (V63T1406A) 0A3 0A3
FCL 1 AFT AVIONICS BAY 4 OUT TEMP
25 TO 130°F
1 S/S

V63 T1406A (V63T1206A) 0A2 0A2
FCL 2 AFT AVIONICS BAY 4 OUT TEMP
25 TO 130°F
1 S/S

FLOW RATE= 6% OF TOTAL FLOW

RGA 4 COLDPLATES 25 WATTS
RGA 3 COLDPLATES 25 WATTS
RGA 2 COLDPLATES 25 WATTS
RGA 1 COLDPLATES 25 WATTS

FCL 2

AC1 (AC3)
FREON LOOP 1 (2)
PUMP A ΦA
PUMP A ΦB
PUMP A ΦC
$V_{AC1ØA}$ (AC3ØA)
$V_{AC1ØB}$ (AC3ØB)
$V_{AC1ØC}$ (AC3ØC)
PNL L4 M (CB25) (CB26) (CB27)

V63K1314N
V63K1114N LF 1
GSE
$V_{PRE-FLT\ TEST\ BUS\ 1A\ (PRE-FLT\ TEST\ BUS\ 2)}$

V63S1311E (OF2) V63 S1111E OF1 OF1 (OF2)
FCL 1 (2) PMP A ON
1=ON
1 S/S
7.5K ΦA

FREON PUMP
LOOP 1 (2)
A OFF B
PNL L1A2 S23 (S24)

STARBOARD SIDE ≈ 6% TOTAL FLOW

V63S1321E (OF3) V63 S1121E OF2 OF2 (OF3)
FCL 1 (2) PMP B ON
1=ON
1 S/S
7.5K ΦA

AC2 (AC1)
FREON LOOP 1 (2)
PUMP B ΦA
PUMP B ΦB
PUMP B ΦC
$V_{AC2ØA}$ (AC1ØA)
$V_{AC2ØB}$ (AC1ØB)
$V_{AC2ØC}$ (AC1ØC)
PNL L4 (M)N (CB22) (CB23) (CB24) (CB39) (CB40) (CB41)

$V_{MNB\ FLC2}$ (MNA FLC1)
V63K1324N (PL 1)
GSE V63K1124N LF 1
GPC V63K1324Y V63K1124Y PL 2
DSM 9112 (9114)

FLOW RATE RAD BYPASS ≈ 3.9 MINUTES FOR LOOP CIRCULATION
RAD FLOW ≈ 12.4 MINUTES FOR LOOP CIRCULATION

FCL 1 PUMP/ ACCUMULATOR PACKAGE

V63P1308A (V63P1108A) OF1 (OF2)
FCL 1 (2) PUMP INLET PRESS
0 TO 500 PSIA
1 S/S

V63Q1330A (V63Q1130A) OF2 (OF1)
FCL 1 (2) ACCUMULATOR QUANTITY
0 TO 100 PCT
1 S/S
F

ECLSS SC1A(1B)

6μ ABSOLUTE FILTER A 380W MAX
61μ FILTER
BALL CHECK VLV
6μ ABSOLUTE FILTER B 380W MAX
61μ FILTER
0.718" ID
25μ ABSOLUTE FILTER
GROUND ADJUSTABLE ORIFICE
ECLSS SC1A(1B)

FLOW RATE = 2600-2900 LB/HR, 65-80 PSID (Δ OF 23%)
2000-2227 LB/HR, 50-46 PSID

FREON
FLOW
EVAP OUT TEMP
PPH
PNL D1 M2

FREON FLOW/EVAP OUT TEMP
LOOP 1
LOOP 2
PNL D1 S4

YELLOW
FREON LOOP
PNL FTA2
32 ≥ T ≥ 65° F
F ≤ 1200 LB/HR

FCL 2 TEMP
FCL 2 FLOW RATE

C&W ELECTRONICS
FCL 1 TEMP
FCL 2 TEMP
FCL 2 FLOW RATE
FCL 1 FLOW RATE

AC2 ΦA
FREON FLOW PROP 1(2)
3A
PNL L4xN CB42 (CB45)
$V_{AC2ØA}$ (AC3ØA)

FLOW PROP VALVE LOOP 1(2)
ICH PL
INTCHGR
PAYLOAD HX
PNL L1A2 S21 (S22)

V63 X1230E (V63X1430E) OF4 N/A
FCL 1(2) FLOW PROP VALVE POSN INTCHGR
1=INTCHGR
1 S/S

V63 X1231E (V63X1431E) OF4 N/A
FCL 1(2) FLOW PROP VALVE POSN P/L
1=P/L
1 S/S

FPV FILTERS 40μ NOMINAL 100μ ABSOLUTE

FLOW PROP VALVE
1.2K $V_{CNTLAB3}$ (CNTLCA3)
M

0.718" ID

ECLSS SC1A(1B)

V63 R1103A (V63R1303A) (OF2) OF1
FCL 1 (2) PAYLOAD HX FLOW RATE
0 TO 1300 LB/HR
1 S/S
F

PAYLOAD HEAT EXCHANGER
FCL 2

ECLSS SC1A

V63 T1155A OF1
FCL 1 INTERCHANGER INLET TEMP
32 TO 68° F
1 S/S

ECLSS SC1B(1A)

V63 R1100A (V63R1300A) OF2 OF2 (OF3) (OF3)
FCL 1 (2) INTERCHANGER FLOW RATE
0 TO 2600 LB/HR
1 S/S
C&W

ARS INTERCHANGER HEAT EXCHANGER
H_2O LOOP 1
H_2O LOOP 2
48,300 BTU/HR MAX LOAD
FCL 2

16. REFER TO TABLE 7-1 FOR DRAWING REFERENCES

15. HYD FLOW THRU HX DURING CIRC PUMP OPS WHEN HYD TEMP <105° F, BYPASS HX AT 115° F. HYDRAULIC RESERVOIR PRESSURE IS 60-65 PSIA

14. RADIATORS ARE CONSTRUCTED OF ALUMINUM (6061-T6) HONEYCOMB. THE SURFACE IS SILVER-TEFLON COATED

13. NOMINAL PRESS LOOP 1 - 105 ± 5 PSIA
LOOP 2 - 90 ± 5 PSIA
LOOP VOLUME FOR FCL 1 (2) (W/RADIATORS, W/O ACCUM) = 5150 IN^3
ACCUM AT 100% = 1659 IN^3
ACCUM AT QX = 0 IN^3
RADIATOR (4 PANELS & HOSES) = 1445 IN^3

12. FES PERFORMANCE

PRI A OR PRI B CONDITION	DESIGN BTU/HR	DEV TEST BTU/HR MAX CAPABILITY
BOTH EVAPS/BOTH LOOPS	131 K	148.0 K
LOOP 1	67.5 K	92.8 K
LOOP 2	67.5 K	127.0 K
TOPPING/BOTH LOOPS	30 K	39.0 K
LOOP 1	N/A	24.6 K
LOOP 2	N/A	37.6 K

CONTINGENCY - SEC CONTROLLER

CONDITION	DESIGN BTU/HR	DEV TEST BTU/HR MAX CAPABILITY
HI LOAD/BOTH LOOPS	67.5 K	113 K
TOPPING/BOTH LOOPS	67.5 K	76.8 K

11. ALL ATCS PLUMBING CONSTRUCTED OF STAINLESS STEEL (CRES 21-6-9) WITH .016 INCH WALLS. LINE INSULATED WITH .25 INCH TQ15000 AND STAINLESS STEEL FOIL EXCEPT LINES IN AFT BAYS 4, 5, 6, AND FLEX HOSES. HEAT EXCHANGERS ARE CONSTRUCTED OF STAINLESS STEEL. COLD PLATES ARE CONSTRUCTED OF ALUMINUM. FLEX HOSES ARE 0.75 INCH ID METAL BELOWS

10. OSL OF CAL CURVE
V63R1100A (1300A) 732.0
V63R1103A (1303A) 159.5
V63R1105A (1305A) -4.5
V63Q1130A (1330A) -11.3
VALUES MAY DIFFER FROM VEHICLE TO VEHICLE

9. OV-102, 105 ONLY. OTHER VEHICLES WILL BE UPDATED DURING MAJOR MOD PERIODS

8. SPARE

7.

LEG \ V_{FLV} / V_{BYP}	RAD FLOW PL 29K	RAD FLOW PL 21.5K	RAD FLOW ICH 29K	RAD BYPASS PL 29K	RAD BYPASS PL 21.5K	RAD BYPASS ICH 29K
PL	40%	22.4%	9.0%	40%	22%	8.9%
ICH	53%	69.5%	80.8%	53%	69%	81.3%

FLOW PROP VALVE SET AT 29K BTU OR 21.5K BTU PRELAUNCH. NOMINALLY IT IS SET IN 29K BTU POSITION (8 RAD PANEL). FPV IS A 2 POSITION SPOOL VLV

6. FCA CONTROLS TO 38 ± 2° F IN NORM, 57 ± 2° F IN HI

5. THE TURN ON SEQUENCE FOR THE FCA CONTAINS THE FOLLOWING STEPS:
T=0 A. BYPASS VALVE IS DRIVEN TO FULL BYPASS (OPEN POSITION) VIA A 5 SECOND OPEN COMMAND
FLOW CONTROL VALVE IS COMMANDED FOR 2304 PULSES ~ 82.6 SECONDS TO THE FULL HOT POSITION
T=90 SEC B. BYPASS VALVE RECEIVES A SECOND CLOSE COMMAND WHICH DRIVES IT TO THE RAD FLOW POSITION. FLOW CONTROL VALVE IS NOW CONTROLLING THE OUTLET TEMP

4. THE AMMONIA BOILER CAN REJECT A MAXIMUM OF 113,200 BTU/HR. THE PRI/GPC CONTROL POINT IS 35 ± 3°F. THE SEC/ON CONTROL POINT IS 34 ± 3°F

3. SPARE

2. DRIVER IS ACTUALLY FOUR DRIVERS - ONE FOR EACH OF THE FOUR STEPPING MOTOR COILS. MOTOR IS DRIVEN BY SEQUENTIALLY POWERING THE COILS. DIRECTION CONTROL IS OBTAINED BY VARYING THE SEQUENCE OF POWER APPLICATION TO THE INDIVIDUAL COILS

NOTES: 1. THE FCL INTERCHANGER FLOW RATE TRANSDUCER GOES THROUGH 2 SIGNAL CONDITIONERS. LOSS OF EITHER ONE WILL RESULT IN THE LOSS OF BOTH THE CRT AND THE METER BUT LOSS OF THE MDM WILL RESULT IN THE LOSS OF THE CRT ONLY

*1 ATCS 1

SIGNATURE		DATE	NATIONAL AERONAUTICS AND SPACE ADMINISTRATION LYNDON B. JOHNSON SPACE CENTER HOUSTON, TEXAS
DSGN LINDA DUMIS		10/31/78	
DR VIC. ORTIZ		10/24/79	ACTIVE THERMAL CONTROL SYSTEM- FREON COOLANT LOOP 1, 2
ENGR Margaret A. Lapp		11/21/91	
ENGR			
APP Mark J. Franz		10/2/91	
APP			SPACE SHUTTLE
OMNIPLAN S.K. Kimbrough		(10-21-91)	ALL
LTR E	PCN 1		121 X 34

DWG NO 7.1
PAGE SHEET 1 of 2

BASIC REV E-1

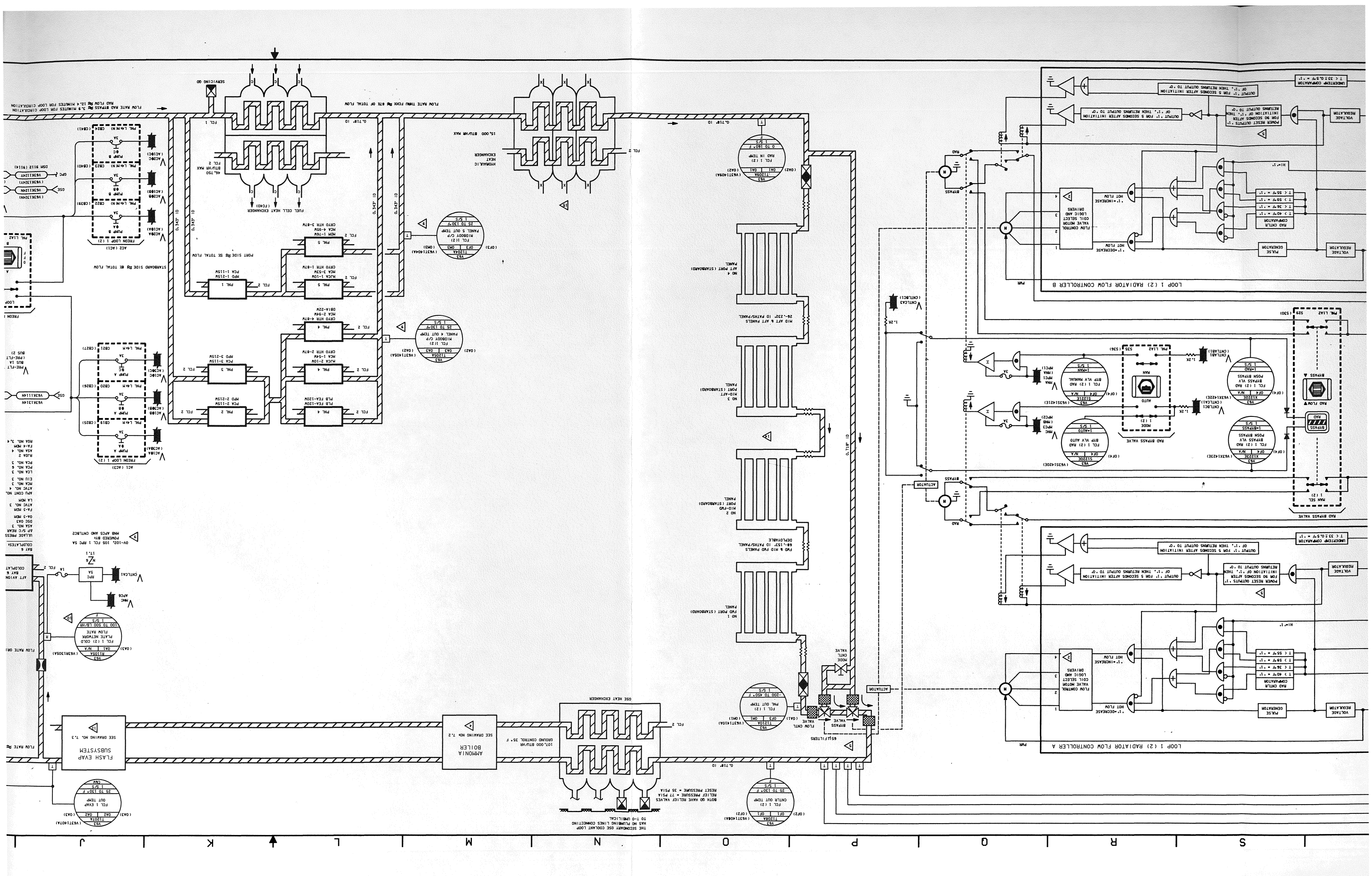
LOOP 1 (2) RADIATOR FLOW CONTROLLER A
LOOP 1 (2) RADIATOR FLOW CONTROLLER B
FLASH EVAP SUBSYSTEM
SEE DRAWING NO. 7.3
AMMONIA BOILER
SEE DRAWING NO. 7.2
GROUND CONTROL 35° F
107,000 BTU/HR
OSE HEAT EXCHANGER
-200 TO 450° F
25 TO 130° F
0 TO 160° F
-20 TO 500 LB/HR
HYDRAULIC HEAT EXCHANGER
15,000 BTU/HR MAX
FUEL CELL HEAT EXCHANGER (FCHX1)
64,750 BTU/HR MAX
FREON LOOP 1 (2)
FREON LOOP 1 (AC3)
STARBOARD SIDE ≈ 8% TOTAL FLOW
PORT SIDE ≈ 5% TOTAL FLOW
FLOW RATE THRU FCHX ≈ 8% OF TOTAL FLOW
FLOW RATE RAD BYPASS ≈ 3.9 MINUTES FOR LOOP CIRCULATION
RAD FLOW ≈ 12.4 MINUTES FOR LOOP CIRCULATION
SERVICING QD
MID ART & AFT PANELS
26-.22ft² ID PANELS/PANEL
NO 4 AFT PANEL (STARBOARD)
NO 3 MID-AFT PORT (STARBOARD) PANEL
NO 2 MID-FWD PORT (STARBOARD) PANEL
NO 1 FWD PORT (STARBOARD) PANEL
FWD & MID FWD PANELS 68-.153ft² ID PANELS/PANEL DEPLOYABLE
0.718ft² ID
0.345ft² ID
0.718ft² ID
0.718ft² ID
RAD BYPASS VALVE
MAN SEL
BYPASS VALVE
FLOW CNTL VALVE
MODE CNTL VALVE
ACTUATOR
RAD
BYPASS
PUMP A
PUMP B
PUMP 4
PUMP 3
PUMP 2
PUMP 1
PRESS GENERATION
RAD CNTLR COMPARATOR
FLOW CONTROL VALVE MOTOR COIL SELECT LOGIC AND DRIVERS
HOT FLOW
INCREASE
DECREASE
POWER RESET OUTPUTS
OUTPUT 'T' FOR 5 SECONDS AFTER INITIATION
UNDERTEMP COMPARATOR
OUTPUT 'T' FOR 5 SECONDS AFTER INITIATION OF 'T', THEN RETURNS OUTPUT TO 0°
T < 33 ± 0.5°F = 'T'
T < 36°F = 'T'
T > 40°F = 'T'
T > 55°F = 'T'
T > 59°F = 'T'
PWR
RAD
SEE DRAWING NO. 7.2
SEE DRAWING NO. 7.3
THE SECONDARY OSE COOLANT LOOP HAS NO PLUMBING LINES CONNECTING TO T-0 UMBILICAL
BOTH GO HAVE RELIEF VALVES RELIEF PRESSURE = 77 PSIA RESET PRESSURE = 35 PSIA
ATVC NO. 4
ATVC NO. 3
RCA NO. 3
PCA NO. 3
ECA NO. 3
EIU NO. 3
PCA NO. 6
ASA NO. 4
PCA NO. 3
RCA NO. 3,4
FA-4 ROM
FA-3 ROM
ATVC NO. 3
LA ROM
APU CONT NO.
RCA NO. 4
ATVC NO. 4
ASA NO. 3
DSC OA3
OA-3 ROM
AP S/C REAR
ULLAGE PRESS
COOLPLATE
BAY 6
AFT AVION
BAY 6
COOLPLATE
FLOW RATE OR
FLOW RATE RR
LOOP
FREON
PUMP A
PUMP B
PUMP 4
PUMP 3
PUMP 2
PUMP 1
PRE-FLT BUS 1A
PRE-FLT BUS 2
OSE
GPC
DSM 9112 (9114)
OV-102, 105 FCL 1 RPC 5A
POWERED BY
MNB APCS AND CNTL&C2
FCL 1
FCL 2
PNL L4H N
PNL L4H M
PNL L4H A
PNL L4H B
PNL L4H C
PNL L4H D
PNL L4H E
PNL L4H F
PNL L4H G
PNL L4H H
PNL L4H J
PNL L4H K
PNL L4H L
PNL L4H P
PNL L4H Q
PNL L4H R
PNL L4H S
PNL L4H T
PNL L4H U
PNL L4H V
PNL L4H W
PNL L4H X
PNL L4H Y
PNL L4H Z
PNL L4A2
PNL 1
PNL 2
PNL 3
PNL 4
PNL 5
MOM 1-76W
MCA 4-95W
CRYO HTR 3-8TW
MCA 1-15W
MCA 3-53W
CRYO HTR 1-8TW
MCA 2-94W
DBIA-22W
CRYO HTR 4-8TW
MCA 2-10W
MCA 1-54W
CRYO HTR 2-8TW
PLB FEA-12DW
MPD 1-215W
PCA 1-115W
MPD 2-215W
PCA 2-115W
MPD 3-215W
PCA 3-115W
CNTLC1
CNTLC2
CNTLC3
CNTLB1
CNTLA1
CNTLA2
CNTLB2
CNTLC4
CNTLB3
CNTLA3
CNTLB4
1.2K
1.5K
3K
5K
1A
3A
RPC 5A
RPC 3A
RPC 1A
RPC 4
RPC 2
RPC 6
RPC 7
RPC 8
RPC 9
RPC 10
RPC 11
RPC 12
RPC 13
RPC 14
RPC 15
RPC 16
RPC 17
RPC 18
RPC 19
RPC 20
RPC 21
RPC 22
RPC 23
RPC 24
RPC 25
RPC

DATE= 10/21/91 | NAME= JDF | VERSION= INK=9

LOOP 1 (2) RADIATOR FLOW CONTROLLER A

LOOP 1 (2) RADIATOR FLOW CONTROLLER B

VOLTAGE REGULATOR

PULSE GENERATOR

RAD CNTLR COMPARATOR
T > 40°F = '1'
T < 36°F = '1'
T > 59°F = '1'
T < 55°F = '1'

'1'=DECREASE HOT FLOW

'1'=INCREASE HOT FLOW

FLOW CONTROL VALVE MOTOR COIL SELECT LOGIC AND DRIVERS

HI='1'

PWR

POWER RESET OUTPUTS '1' FOR 90 SECONDS AFTER INITIATION OF '1', THEN RETURNS OUTPUT TO '0'

OUTPUT '1' FOR 5 SECONDS AFTER INITIATION OF '1', THEN RETURNS OUTPUT TO '0'

UNDERTEMP COMPARATOR
T < 33±0.5°F = '1'

RAD CONTROLLER
LOOP 1 (2)
OUT TEMP

MN B FREON
RAD CNTLR 1 (2)
3A
PNL 015H D CB14 (CB15)
$V_{MNB\ 015}$ (MNB 015)

AC2 (AC3) ØB
RAD CNTLR 1A (2A)
3A
PNL L4H P CB129 (CB47)
$V_{AC2ØB}$ (AC3ØB)

AC1 ØA (ØØ)
RAD CNTLR 1B (2B)
3A
PNL L4H P CB128 (CB44)
$V_{AC1ØA}$ (AC1ØØ)

MN A FREON
RAD CNTLR 1 (2)
3A
PNL 014H D CB14 (CB15)
$V_{MNA\ 014}$ (MNA 014)

V63 S1211E (V63S1411E)
(OF4) | OF4 | N/A
FCL 1 (2) RAD TEMP CNTLR AUTO A
1=AUTO A
1 S/S

V63 S1212E (V63S1412E)
(OF4) | OF4 | N/A
FCL 1 (2) RAD TEMP CNTLR AUTO B
1=AUTO B
1 S/S

AUTO A / OFF / AUTO B

HI / NORM

RAD BYPASS VALVE
MAN SEL 1 (2)

BYPASS / RAD

RAD FLOW

V63 X1223E (V63X1423E)
(OF4) | OF4 | N/A
FCL 1 (2) RAD BYPASS VLV POSN BYPASS
1=BYPASS
1 S/S

V63 X1222E (V63X1422E)
(OF4) | OF4 | N/A
FCL 1 (2) RAD BYPASS VLV POSN BYPASS
1=RAD
1 S/S

RAD BYPASS VALVE
MODE 1 (2)
AUTO / MAN
PNL L1A2 S35 (S36) S29 (S30)

V63 S1220E (V63S1420E)
(OF4) | OF4 | N/A
FCL 1 (2) RAD BYP VLV AUTO
1=AUTO
1 S/S

V63 S1221E (V63S1421E)
(OF4) | OF4 | N/A
FCL 1 (2) RAD BYP VLV MANUAL
1=MAN
1 S/S

$V_{CNTLBC1}$ (CNTLCA1) (V63X1422E) 1.2K
$V_{CNTLAB1}$ (CNTLAB1) 1.2K
$V_{CNTLCA3}$ (CNTLBC1) 1.2K
$V_{MNC\ MPC3}$ (MNB MPC3)
$V_{MNA\ MPC1}$ (MNA MPC1)
3A

RAD / BYPASS / ACTUATOR

PNL L1A2 S25 S26 (S27)

LOOP 2 CONTROLLER A
LOOP 2 CONTROLLER B

THE SECONDARY GSE COOLANT LOOP HAS NO PLUMBING LINES CONNECTING TO T-0 UMBILICAL

BOTH QD HAVE RELIEF VALVES
RELIEF PRESSURE = 77 PSIA
RESET PRESSURE = 35 PSIA

V63 T1208A (V63T1408A)
(OF2) | OF1 | OF1 | (OF2)
FCL 1 (2) CNTLR OUT TEMP
25 TO 130° F
1 S/S

0.718" ID

65µ FILTERS

BYPASS VALVE

FLOW CNTL VALVE (OA1)

V63 T1210A (V63T1410A)
OF3 | OM1 (OM1)
FCL 1 (2) PNL OUT TEMP
-200 TO 450° F
1 S/S

ACTUATOR

MODE CNTL VALVE

GSE HEAT EXCHANGER

FCL 2

NO 1 FWD PORT (STARBOARD) PANEL

FWD & MID FWD PANELS 68-.153" ID PATHS/PANEL DEPLOYABLE

NO 2 MID-FWD PORT (STARBOARD) PANEL

NO 3 MID-AFT PORT (STARBOARD) PANEL

MID AFT & AFT PANELS 26-.232" ID PATHS/PANEL

NO 4 AFT PORT (STARBOARD) PANEL

V63 T1209A (V63T1409A)
(OA2) | OA1 | OA1 (OA2)
FCL 1 (2) RAD IN TEMP
0 TO 160° F
1 S/S

FCL 2

BASIC REV E-1

DATE: 9/05/90	NAME: LAM	VERSION: INK, 3
DATE: 09/03/91	NAME: VSH	VERSION: BPT, 1
DATE: 09/17/91	NAME: MAG	VERSION: INK, 4

PLUMBING LENGTHS	LOOP 1	LOOP 2
PUMP PACKAGE TO TEE OFF MID C/P BAY 2/3/4	0′, 1"	0′, 1"
TEE OFF MID C/P BAY 2/3/4 TO TEE OFF MID C/P BAY 1/5	4′, 11"	6′, 0"
TEE OFF MID C/P BAY 1/5 TO FC HX	22′, 6"	22′, 2"
FC HX TO TEE IN MID C/P BAY 2/3/4	27′, 2"	18′, 2"
TEE IN MID C/P BAY 2/3/4 TO TEE IN C/P BAY 1/5	0′, 6"	2′, 8"
TEE OFF MID C/P BAY 2/3/4 TO TEE OFF MID C/P BAY 2/3	8′, 5"	9′, 6"
TEE OFF MID C/P BAY 2/3 TO MID C/P 2	4′, 11"	4′, 10"
TEE OFF MID C/P BAY 2/3 TO MID C/P 3	2′, 3"	2′, 8"
MID C/P 2 TO TEE IN MID C/P BAY 2/3	5′, 5"	5′, 5"
MID C/P 3 TO TEE IN MID C/P BAY 2/3	1′, 1"	1′, 0"
TEE IN MID C/P BAY 2/3 TO MID C/P BAY 4	15′, 0"	16′, 2"
MID C/P BAY 4 TO TEE IN MID C/P BAY 2/3/4	14′, 3"	4′, 4"
TEE OFF MID C/P BAY 1/5 TO MID C/P BAY 1	2′, 4"	1′, 11"
MID C/P BAY 1 TO MID C/P BAY 5	17′, 4"	18′, 1"
MID C/P BAY 5 TO TEE IN MID C/P BAY 1/5	4′, 3"	15′, 6"
TEE IN MID C/P BAY 1/5 TO HYDR HX	74′, 11"	91′, 0"
HYDR HX TO TEE OFF RADS	40′, 9"	49′, 6"
TEE OFF RADS TO RAD CNTLR (BYPASS/HOT LEG)	1′, 2"	0′, 7"
TEE OFF RADS TO AFT PNL CONNECTION	11′, 8"	12′, 10"
FRWD PNL CONNECTION TO RAD CNTLR (COLD LEG)	53′, 11"	51′, 3"
RAD CNTLR TO GSE	34′, 10"	50′, 9"
GSE HX TO ABS	19′, 10"	18′, 1"
ABS TO FES	34′, 7"	33′, 9"
FES TO TEE OFF AFT C/P	3′, 4"	5′, 8"
TEE OFF AFT C/P TO FPV	74′, 6"	90′, 3"
FPV TO INTCHGR	14′, 0"	12′, 2"
INTCHGR TO TEE IN INTCHGR/PL	5′, 9"	4′, 2"
FPV TO PL HX	3′, 6"	4′, 0"
PL HX TO TEE IN INTCHGR/PL	8′, 1"	7′, 2"
TEE IN INTCHGR/PL TO TEE IN CP/INTCHGR/PL	1′, 8"	1′, 11"
TEE OFF AFT C/P TO AFT C/P BAY 6	7′, 8"	6′, 2"
AFT C/P BAY 6 TO AFT C/P BAY 5	15′, 5"	15′, 8"
AFT C/P BAY 5 TO AFT C/P BAY 4	8′, 2"	8′, 3"
AFT C/P BAY 4 TO TEE IN CP/INTCHGR/PL	88′, 10"	105′, 5"
TEE IN CP/INTCHGR/PL TO PUMP PACKAGE	0′, 4"	0′, 3"

* 1 ATCS 2

SIGNATURE		DATE
DSGN VIC ORTIZ		5/11/87
DR		
ENGR M. LANGLEY		
ENGR	Mary M. Langley	10/7/91
APP	Mack F. Tevis	10/7/91
APP		
OMNIPLAN	S. K. Kimbrell	10-21-91
LTR E	PCN 1	

NATIONAL AERONAUTICS AND SPACE ADMINISTRATION
LYNDON B. JOHNSON SPACE CENTER HOUSTON, TEXAS

ACTIVE THERMAL CONTROL SYSTEM-
FREON COOLANT LOOP 1, 2
(PLUMBING LENGTHS)

SPACE SHUTTLE	DWG NO 7.1	
ALL		
22 x 17	PAGE	SHEET 2 OF 2

BASIC REV E DCN-1

DATE: 09/03/91	NAME: VSH	VERSION# BPT: 1
DATE: 09/19/91	NAME: MAG	VERSION# INK: 1
DATE: 11/26/91	NAME: PSD	VERSION# INK: 2

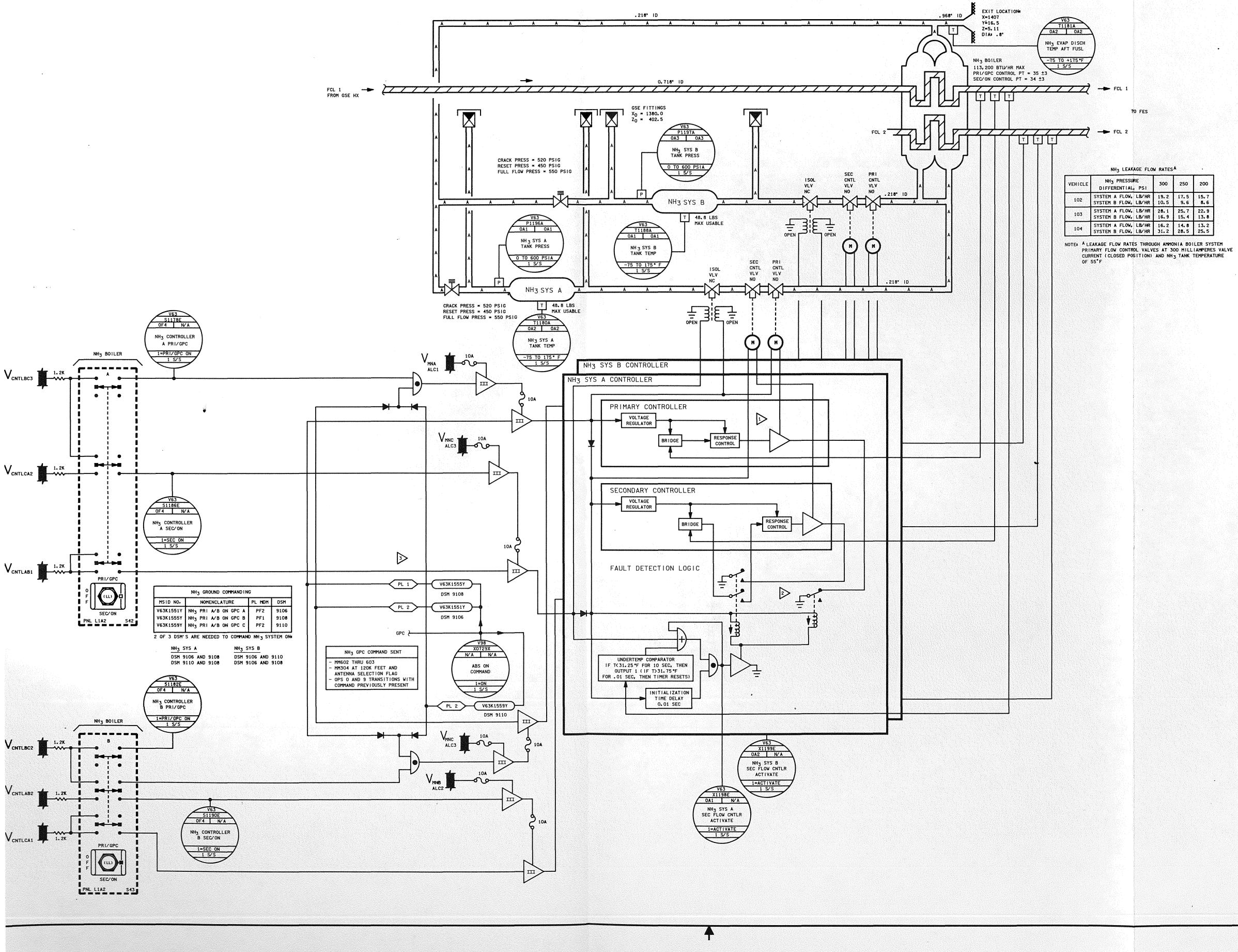

NH3 LEAKAGE FLOW RATES[A]

VEHICLE	NH3 PRESSURE DIFFERENTIAL, PSI	300	250	200
102	SYSTEM A FLOW, LB/HR	19.2	17.5	15.7
	SYSTEM B FLOW, LB/HR	10.5	9.6	8.6
103	SYSTEM A FLOW, LB/HR	28.1	25.7	22.9
	SYSTEM B FLOW, LB/HR	16.9	15.4	13.8
104	SYSTEM A FLOW, LB/HR	16.2	14.8	13.2
	SYSTEM B FLOW, LB/HR	31.2	28.5	25.5

NOTE: [A] LEAKAGE FLOW RATES THROUGH AMMONIA BOILER SYSTEM PRIMARY FLOW CONTROL VALVES AT 300 MILLIAMPERES VALVE CURRENT (CLOSED POSITION) AND NH3 TANK TEMPERATURE OF 55°F

[3]

PAYLOAD MDM LOSS	
MDM LOST	NH3 SYSTEM LOST
PL1	NH3 SYSTEM A PRI/GPC
PL2	NH3 SYSTEM A PRI/GPC; NH3 SYSTEM B PRI/GPC

[2] IF THE AMMONIA BOILER OUT TEMP DROPS BELOW 31.25° F, A 10 SECOND TIMER IS BEGUN. AT THE END OF 10 SECONDS EITHER THE TIMER WILL BE RESET OR SWITCHOVER FROM PRIMARY TO SECONDARY CONTROLLER WILL OCCUR DEPENDING ON THE FOLLOWING:

- IF THE TEMP REMAINS BELOW 31.25° F CONTINUOUSLY FOR 10 SEC, SWITCHOVER WILL OCCUR AND THE SECONDARY CONTROLLER AND VALVE WILL BE SELECTED WITH THE PRIMARY VALVE THEN GOING FULL OPEN
- IF DURING THE 10 SEC THE TEMP RISES ABOVE 31.75° F FOR AS LONG AS 10 MILLISECONDS, THE TIMER IS RESET AND OPERATION CONTINUES ON THE PRIMARY CONTROLLER AND VALVE
- IF DURING THE 10 SEC THE TEMP RISES ABOVE 31.25° F BUT NOT ABOVE 31.75° F, THEN EITHER RESET OR SWITCHOVER MAY OCCUR AT THE OPTION OF THE CONTROLLER

– AUTO SWITCHOVER CAN ONLY OCCUR FROM PRIMARY TO SECONDARY

– TO SWITCH FROM SECONDARY TO PRIMARY (TO RESET THE MALFUNCTION LOGIC) POWER MUST BE REMOVED FROM UNIT AND REAPPLIED

NOTES: [1] UPON INITIAL APPLICATION OF POWER, CONTROLLER DRIVES PRIMARY CONTROL VALVE TO MOST CLOSED POSITION (VALVE IS OPEN WHEN UNPOWERED). CONTROLLER THEN ADJUSTS VALVE TO ESTABLISH AND MAINTAIN THE AMMONIA BOILER FROM OUTLET TEMPERATURE AT 35(34) ±3°F. AS BOILER OUT TEMP INCREASES, CURRENT TO VALVE DECREASES ALLOWING VALVE TO OPEN MORE. AT ZERO CURRENT VALVE IS FULL OPEN. AT 300 TO 315 MILLIAMPS VALVE IS AT MAX CLOSED POSITION (FOR OV102 5-10 PERCENT OF TOTAL FLOW AREA IS STILL OPEN FOR FLOW AT MAX CLOSED POSITION). SPEC MAX FLOW IN CLOSE POSITION IS 45 LBS/HR

*2 ABS 1

SIGNATURE		DATE	NATIONAL AERONAUTICS AND SPACE ADMINISTRATION LYNDON B. JOHNSON SPACE CENTER HOUSTON, TEXAS
DSGN	LINDA DUMIS	10/31/78	
DR	VIC. ORTIZ	06/06/79	
ENGR	M. LANGLEY		AMMONIA BOILER SYSTEM
ENGR	Margaret A. Langley	10/31/91	
APP	Mark D. Ramsey	10/31/91	
APP			SPACE SHUTTLE / DWG NO 7.2
OMNIPLAN	S.K. Kinbrae	10-31-91	ALL
LTR E	PCN 1		126.5 X 34 / PAGE / SHEET 1 OF 1

BASIC REV E-1

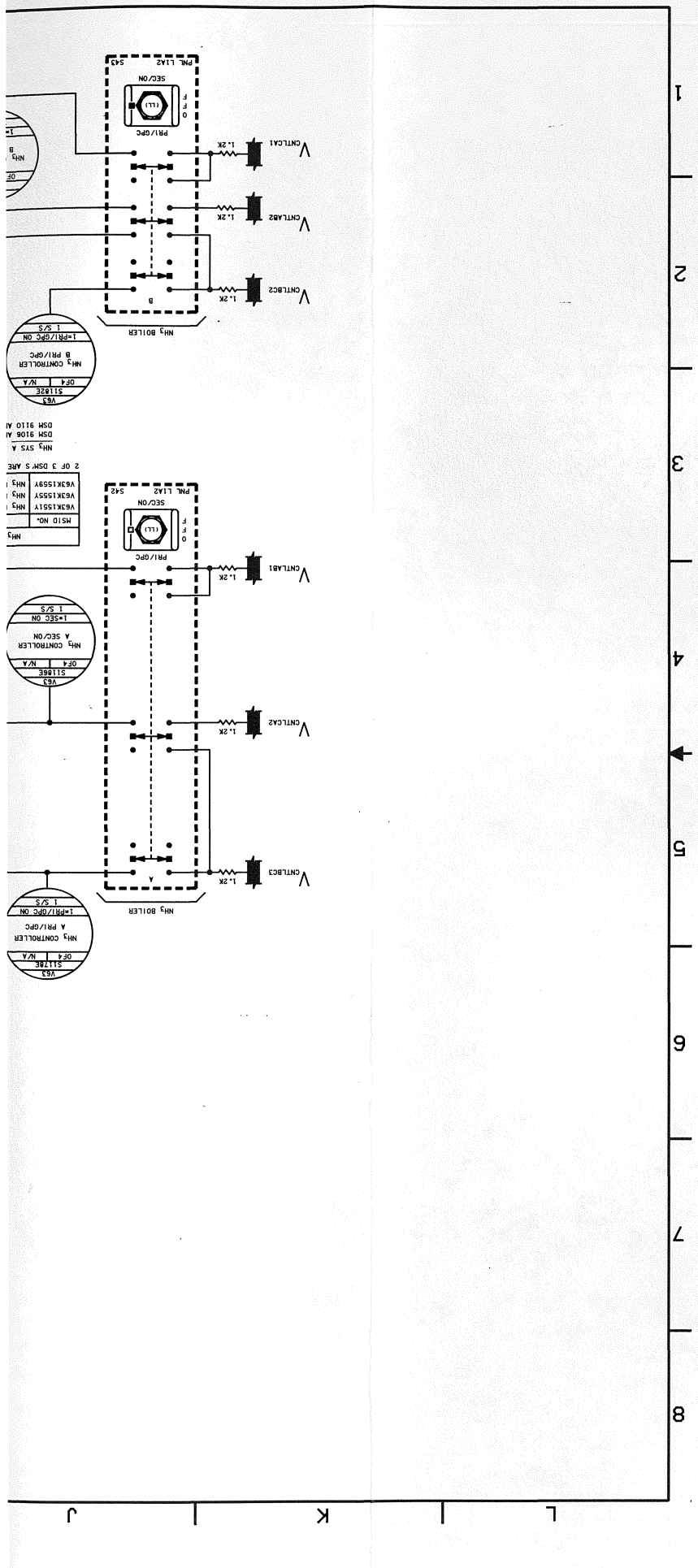

PRI/GPC
SEC/ON
PNL L1A2
S42
S43
NH3 BOILER
CNTLA1
CNTLA2
CNTLB1
CNTLB2
CNTLBC2
CNTLBC3
1.2K

DATE: 10/10/91	NAME: JDF	VERSION: BPT: 24
DATE: 10-19-91	NAME: SKK	VERSION: INK: 5
DATE: 11/04/91	NAME: BJT	VERSION: INK: 6

J I H G F E D C B A

8 7 6 5 4 3 2 1

NOZZLE EXIT: X_O = 1390.3, Y_O = -113.6, Z_O = 326.8, DIA= 4.5"

OVBD

ITLR S TO 330° F

V63 T1890A — OA3 | OA3 — HI LOAD DUCT NOZ T — 0 TO 400° F — 1 S/S — F

ZONE C HEATERS (NOZ)

HTR A, B, C

ZONE B HEATERS (OUTBOARD)

AD DUCT HTR A

71W

B

C

BOTH THERMOSTATS: CLOSE 255 ± 5° F, OPEN 265 ± 5° F, MIN ΔT = 4° F

V63 T1821A — OF4 | OM2 — HI LOAD DUCT T Y-91 (OUTBD) — 0 TO 400° F — 1 S/S — F

FCL 1 TO TOPPING

FCL 2

TOPPING EVAPORATOR HEATER

DUCT

$V_{CNTLAB2}$ 1A

$V_{CNTLAB3}$ 1A

$V_{CNTLAB1}$ 1A

$V_{CNTLBC1}$ 1A

$V_{CNTLBC3}$ 1A

$V_{CNTLBC2}$ 1A

$V_{CNTLCA1}$ 1A

$V_{CNTLCA2}$ 1A

$V_{CNTLCA3}$ 1A

V63 S2621E — OF4 | N/A — TOPPING DUCT HTR B ON — 1=B ON — 1 S/S

V63 S2611E — OF4 | N/A — TOPPING DUCT HTR A/B ON — 1=A/B ON — 1 S/S

V63 S2601E — OF4 | N/A — TOPPING DUCT HTR A ON — 1=A ON — 1 S/S

V63 S2631E — OF4 | N/A — TOPPING DUCT HTR C ON — 1=C ON — 1 S/S

A/B: C, B, A, OFF

PNL L1A2 S39

V_{MNA} MPC1 — RPC 15A — TOPPING DUCT FWD HTR A 257W AT 24VDC

V_{MNA} MPC1 — RPC 20A — TOPPING DUCT AFT HTR A 321W AT 24VDC

V_{MNA} ALC1 — OVERTEMP THERMOSTAT OPEN 285-295° F — TOPPING DUCT RIGHT HTR A 42.7W AT 24VDC

V_{MNA} ALC1 — OVERTEMP THERMOSTAT OPEN 285-295° F — TOPPING DUCT LEFT HTR A 42.7W AT 24VDC

CLOSE 154 ± 3° F, OPEN 162 ± 4° F, MIN ΔT = 2° F

V_{MNB} MPC2 — RPC 15A — TOPPING DUCT FWD HTR B 257W AT 24VDC

V_{MNB} MPC2 — RPC 20A — TOPPING DUCT AFT HTR B 321W AT 24VDC

V_{MNB} ALC2 — OVERTEMP THERMOSTAT OPEN 285-295° F — TOPPING DUCT RIGHT HTR B 42.7W AT 24VDC

V_{MNB} ALC2 — OVERTEMP THERMOSTAT OPEN 285-295° F — TOPPING DUCT LEFT HTR B 42.7W AT 24VDC

V_{MNC} MPC3 — RPC 15A — TOPPING DUCT FWD HTR C 257W AT 24VDC

V_{MNC} MPC3 — RPC 20A — TOPPING DUCT AFT HTR C 321W AT 24VDC

TOPPING EVAPORATOR HEATER

L-NOZZLE

$V_{CNTLBC1}$ 1.2K

$V_{CNTLAB2}$ 1.2K

A AUTO — OFF — B AUTO

PNL L1A2 S37

V63 S1880E — OA1 | N/A — L TOP NOZ HTR A ON — 1=ON — 1 S/S

V63 S1881E — OA2 | N/A — L TOP NOZ HTR B ON — 1=ON — 1 S/S

V_{MNA} ALC1 — TEMP CNTLR — BRIDGE — LEFT TOPPING DUCT NOZ HTR A 18.4W AT 24VDC — TEMP CNTLR CONTROLS TO 55 ± 15° F

V_{MNB} ALC2 — TEMP CNTLR — BRIDGE — LEFT TOPPING DUCT NOZ HTR B 18.4W AT 24VDC — TEMP CNTLR CONTROLS TO 55 ± 15° F

TOPPING EVAPORATOR HEATER

R-NOZZLE

$V_{CNTLBC3}$ 1.2K

$V_{CNTLCA1}$ 1.2K

A AUTO — OFF — B AUTO

PNL L1A2 S38

V63 S1885E — OA2 | N/A — R TOP NOZ HTR A ON — 1=ON — 1 S/S

V63 S1886E — OA3 | N/A — R TOP NOZ HTR B ON — 1=ON — 1 S/S

V_{MNB} ALC2 — TEMP CNTLR — BRIDGE — RIGHT TOPPING DUCT NOZ HTR A 18.4W AT 24VDC — TEMP CNTLR CONTROLS TO 55 ± 15° F

V_{MNC} ALC3 — TEMP CNTLR — BRIDGE — RIGHT TOPPING DUCT NOZ HTR B 18.4W AT 24VDC — TEMP CNTLR CONTROLS TO 55 ± 15° F

NOZZLE EXIT: X_O = 1505.7, Y_O = -127.1, Z_O = 304.8, DIA= 2.09"

OVBD

V63 T1878A — OA3 | OA3 — L TOP NOZZLE T (L NOZ) — 0 TO 250° F — 1 S/S — F

CONTROLS TO 55 ± 15° F

ZONE I HEATERS (HEATERS A, B)

TOPPING DUCT LEFT NOZZLE HTR A

B

CONTROL THERMOSTATS: CLOSE 154 ± 3° F, OPEN 162 ± 4° F, MIN ΔT = 2° F

OVERTEMP THERMOSTATS: CLOSE 285° F, OPEN 295° F

ZONE H HEATERS (HEATERS A, B)

TOPPING DUCT LEFT HTR A

B

V63 T1800A — OA3 | OA3 — L TOP DUCT T Y-89 (L) — 0 TO 250° F — 1 S/S — F

TOPPING DUCT AFT HTR C

B

A

BOTH THERMOSTATS: CLOSE 255 ± 5° F, OPEN 265 ± 5° F, MIN ΔT = 4° F

BOTH THERMOSTATS: CLOSE 255 ± 5° F, OPEN 265 ± 5° F, MIN ΔT = 4° F

TOPPING DUCT FWD HTR A

B

C

V63 T1801A — OF4 | OM2 — TOP DUCT T X1390 (FWD) — 0 TO 400° F — 1 S/S — F

ZONE D HEATERS (HEATERS A, B, C)

V63 T1802A — OF4 | OM2 — TOP DUCT T X1464 (AFT) — 0 TO 400° F — 1 S/S — F

ZONE E HEATERS (HEATERS A, B, C)

V63 T1810A — OA2 | OA2 — R TOP DUCT T Y+89 (R) — 0 TO 250° F — 1 S/S — F

CONTROL THERMOSTATS: CLOSE 154 ± 3° F, OPEN 162 ± 4° F, MIN ΔT = 2° F

OVERTEMP THERMOSTATS: CLOSE 285° F, OPEN 295° F

ZONE F HEATERS (HEATERS A, B)

TOPPING DUCT RIGHT HTR A

B

CONTROLS TO 55 ± 15° F

ZONE G HEATERS (HEATERS A, B)

V63 T1879A — OA2 | OA2 — R TOP NOZZLE T (R NOZ) — 0 TO 250° F — 1 S/S — F

TOPPING DUCT RIGHT NOZZLE HTR A

B

OVBD

NOZZLE EXIT: X_O = 1505.7, Y_O = -127.1, Z_O = 304.8, DIA= 2.09"

FCL 2

FCL 1

~50% OF TOTAL FLOW

~50% OF TOTAL FLOW

ACOD

FCL 2

FCL 1

SPRAY NOZ B

SPRAY NOZ A

~12% OF TOTAL FLOW

~12% OF TOTAL FLOW

TOPPING EVAPORATOR

12. REFER TO TABLE 7-1 DRAWING REFERENCES

11. TYPE I

POWER

A1

B1

A2

N

3A

OUTPUT

GROUND

B1 - 5V SOURCE
A1 - 28V SOURCE

TYPE III

POWER

A1

A2

A3

5A

OUTPUT

GROUND

10 FES HI LOAD FDLN HTR AND ACCUM FDLN HTR OPERATE ON SAME THERMOSTAT

9 OK SIGNAL LOST WHEN N_2 CHARGE LOST (BELLOWS AT 100℧). MECHANICAL CONTACT SWITCH

8 TOPPING DUCT "C" HTR POSITION POWERS THE DUCT "B" LEFT AND RIGHT HTRS

7 THERMOSTAT SET POINTS: CLOSE TO ± 5°F, OPEN 80 ± 5°F, EXCEPT ACCUMULATOR THERMOSTAT (55 TO 75°F)

6 FEEDWATER LINES ARE 3/8" AND =100 FT LONG. THEY ARE CONSTRUCTED OF SS, INSULATED WITH 0.5" TG15000 AND COVERED WITH SS FOIL

5 90 INCH LONG DUCT WITH 6" DIA

4 82 INCH LONG DUCT WITH 6" DIA WHICH BRANCHES INTO TWO 170 INCH LONG DUCTS WITH 4" DIA

3 USEABLE, H_2O VOLUME 10 IN^3, INSULATED WITH 0.5" TG15000

2. ALL DUCTS ARE ALUMINUM, INSULATED WITH 1 INCH TG15000 AND COVERED WITH ALUMINIZED TAPE. NOZZLE ASSEMBLIES: HI LOAD CONSTRUCTED OF NICKEL. TOPPING CONSTRUCTED OF COLUMBIUM

NOTES: 1 WATER SUPPLY IS 15-17.5 PSI ABOVE CABIN PRESSURE AT 60-110° F

*3 FES 1

SIGNATURE		DATE	NATIONAL AERONAUTICS AND SPACE ADMINISTRATION LYNDON B. JOHNSON SPACE CENTER HOUSTON, TEXAS
DSGN LINDA DUMIS		3/3/80	
DR			FLASH EVAPORATOR SUBSYSTEM
ENGR K. MESSERSMITH			
ENGR K. M.		10/29/91	
APP Edmund L. Gee 10/29/91			
APP		SPACE SHUTTLE	DWG NO 7.3
OMNIPLAN S.K. Kimbro	11-4	ALL	
LTR E	PCN 1	126.5 X 34	PAGE SHEET 1 OF 2

BASIC REV E-1

T S R Q P O N M L K J

FES FDLN A FWD HTR 1 18.8W AT 26.5VDC
FES ACCUM A HTR 1 14.6W AT 26.5VDC
FES TOPPING HLN A HTR 1 14.6W AT 26.5VDC
FES FDLN A MID 2 HTR 1 46W AT 26.5VDC
FES FDLN A FWD HTR 2 18.8W AT 26.5VDC
FES ACCUM A HTR 2 14.6W AT 26.5VDC
FES TOPPING HLN A HTR 2 14.6W AT 26.5VDC
FES FDLN A MID 2 HTR 2 46W AT 26.5VDC

$V_{CNTLAB1}$ 1A
$V_{CNTLCA1}$ 1A
1.2K
FLASH EVAP FEEDLINE HTR
B SUPPLY
PNL L2A1 S24
V63 S1865E 0F4 N/A FES FDLN B HTR 1 ON 1=ON 1 S/S
V63 S1866E 0F4 N/A FES FDLN B HTR 2 ON 1=ON 1 S/S

V_{MNC} ALC3
V_{MNC} MPC3 5A
V_{MNA} ALC1
V_{MNA} MPC1 5A
III

FES FDLN B FWD HTR 1 18.8W AT 26.5VDC
FES FDLN B AFT HTR 1 21.0W AT 26.5VDC
FES FDLN B MID 1 HTR 1 18.8W AT 26.5VDC
FES HI LOAD FDLN B HTR 1 7.5W AT 26.5VDC
FES ACCUM B HTR 1 14.6W AT 26.5VDC
FES ACCUM FDLN B HTR 1 3.3W AT 26.5VDC
FES TOPPING FDLN B HTR 1 14.6W AT 26.5VDC
FES FDLN B MID 2 HTR 1 46W AT 26.5VDC
FES FDLN B FWD HTR 2 18.8W AT 26.5VDC
FES FDLN B AFT HTR 2 21.0W AT 26.5VDC
FES FDLN B MID 1 HTR 2 18.8W AT 26.5VDC
FES HI LOAD FDLN B HTR 2 7.5W AT 26.5VDC
FES ACCUM B HTR 2 14.6W AT 26.5VDC
FES ACCUM FDLN B HTR 2 3.3W AT 26.5VDC
FES TOPPING FDLN B HTR 2 14.6W AT 26.5VDC
FES FDLN B MID 2 HTR 2 46W AT 26.5VDC

V63 T1896A 0A2 0A2 FES FDLN B HI LOAD LINE T 0 TO 250° F 1 S/S F
V63 T1895A 0A1 0M1 FES FDLN A HI LOAD LINE T 0 TO 250° F 1 S/S F

X1307 X1380 FES FDLN B AFT HTRS 1 AND 2 43" I.D.
ISOL VLV B PULSER VLV B 40µ FILTER P, Q, R, S, T, 3-2 ISOL VLV A PULSER VLV A
HI LOAD EVAPORATOR
TOPPING EVAPORATOR
FES ACCUM FDLN B HTRS 1 AND 2
FES HI LOAD FDLN B HTRS 1 AND 2
FES ACCUM A HTRS 1 AND 2
FES ACCUM B HTRS 1 AND 2
FES HI LOAD FDLN A HTRS 1 AND 2
FES ACCUM FDLN A HTRS 1 AND 2
FES TOPPING FDLN B HTRS 1 AND 2
FES TOPPING FDLN A HTRS 1 AND 2
FES FDLN A AFT HTRS 1 AND 2
X1390

V63 T1877A 0F3 0M2 FES FDLN B TEMP X1360 (AFT) 0 TO 160° F 1 S/S F
V63 T1894A 0A2 0M2 FES FDLN B ACCUM LINE T 0 TO 160° F 1 S/S
V63 T1760A 0A3 0A3 FES FDLN B ACCUM T 25 TO 130° F 1 S/S
V63 X1761E 0A3 N/A FES FDLN B ACCUM P OK 1=ON/OK 1 S/S
V63 T1892A 0A2 0M2 FES FDLN A ACCUM LINE T 0 TO 160° F 1 S/S
V63 X1751E 0A1 N/A FES FDLN A ACCUM P OK 1=ON/OK 1 S/S
V63 T1750A 0A2 0A2 FES FDLN A ACCUM T 25 TO 130° F 1 S/S
V63 T1876A 0F1 0M1 FES FDLN A TEMP X1360 (AFT) 0 TO 160° F 1 S/S F
V63 T1893A 0A2 0M2 FES TOPPING FDLN B T 0 TO 160° F 1 S/S F
V63 T1891A 0A2 0M2 FES TOPPING FDLN A T 0 TO 160° F 1 S/S F

MID FUSELAGE | AFT FUSELAGE

HI LOAD DUCT HTR
$V_{CNTLAB1}$ 1A
$V_{CNTLAB3}$ 1A
$V_{CNTLAB2}$ 1A
$V_{CNTLBC1}$ 1A
$V_{CNTLBC2}$ 1A
$V_{CNTLBC3}$ 1A
$V_{CNTLCA2}$ 1A
$V_{CNTLCA3}$ 1A
$V_{CNTLCA1}$ 1A
V63 S2531E 0F4 N/A HI LOAD DUCT HTR C ON 1=C ON 1 S/S
V63 S2521E 0F4 N/A HI LOAD DUCT HTR B ON 1=B ON 1 S/S
V63 S2501E 0F4 N/A HI LOAD DUCT HTR A ON 1=A ON 1 S/S
V63 S2511E 0F4 N/A HI LOAD DUCT HTR A/B ON 1=A/B ON 1 S/S
A/B/C OFF
PNL L1A2 S41

V_{MNA} ALC1
V_{MNA} MPC1
V_{MNB} ALC2
V_{MNB} MPC2
V_{MNC} ALC3
V_{MNC} MPC3
TEMP CNTLR
BRIDGE
RPC 15A
RPC 20A
III
BOTH THERMOSTATS* CLOSE 255 ± 5° F OPEN 265 ± 5° F MIN ΔT = 4° F
TEMP CNTLR CONTROLS TO 300 TO 330° F

HI LOAD DUCT NOZ HTR A 85W AT 24VDC
HI LOAD DUCT OUTBD HTR A 171W AT 24VDC
HI LOAD DUCT INBD HTR A 368W AT 24VDC
HI LOAD DUCT NOZ HTR B 85W AT 24VDC
HI LOAD DUCT OUTBD HTR B 171W AT 24VDC
HI LOAD DUCT INBD HTR B 368W AT 24VDC
HI LOAD DUCT NOZ HTR C 85W AT 24VDC
HI LOAD DUCT OUTBD HTR C 171W AT 24VDC
HI LOAD DUCT INBD HTR C 368W AT 24VDC

NOZZLE EXIT* X_Q = 1390.3 Y_Q = -113.6 Z_Q = 326.8 DIA* 4.5"
OVBD
V63 T1890A 0A3 0A3 HI LOAD DUCT NOZ T 0 TO 400° F 1 S/S F
TEMP CNTLR CONTROLS TO 300 TO 330° F
ZONE C HEATERS (NOZ)
HI LOAD NOZ HTR A
ZONE B HEATERS (OUTBOARD)
HI LOAD DUCT OUTBD HTR A 171W
HI LOAD DUCT INBD HTR A 368W
$V_{CNTLAB2}$ 1A
$V_{CNTLAB3}$ 1A
$V_{CNTLAB1}$ 1A
$V_{CNTLBC1}$ 1A
$V_{CNTLBC3}$ 1A
BOTH THERMOSTATS* CLOSE 255 ± 5° F OPEN 265 ± 5° F MIN ΔT = 4° F
$V_{CNTLBC2}$ 1A
$V_{CNTLCA1}$ 1A
$V_{CNTLCA2}$ 1A
$V_{CNTLCA3}$ 1A
$V_{CNTLBC1}$
$V_{CNTLAB2}$
V63 T1821A 0F4 0M2 HI LOAD DUCT T Y-91 (OUTBD) 0 TO 400° F 1 S/S F
V63 T1820A 0A1 0A1 HI LOAD DUCT T Y-89 (INBD) 0 TO 400° F 1 S/S F
HI LOAD DUCT INBD HTR A 368W
ZONE A HEATERS (INBOARD)
FCL 1
FCL 2
~50% OF TOTAL FLOW
ACCD
SPRAY NOZ B
SPRAY NOZ A
~12% OF TOTAL FLOW
TO TOPPING
HI LOAD EVAPORATOR

DATE: 11/04/91 | NAME: BJT | VERSION: INK 6

W V U T S R Q P O N

8 7 6 5 4 3 2 1

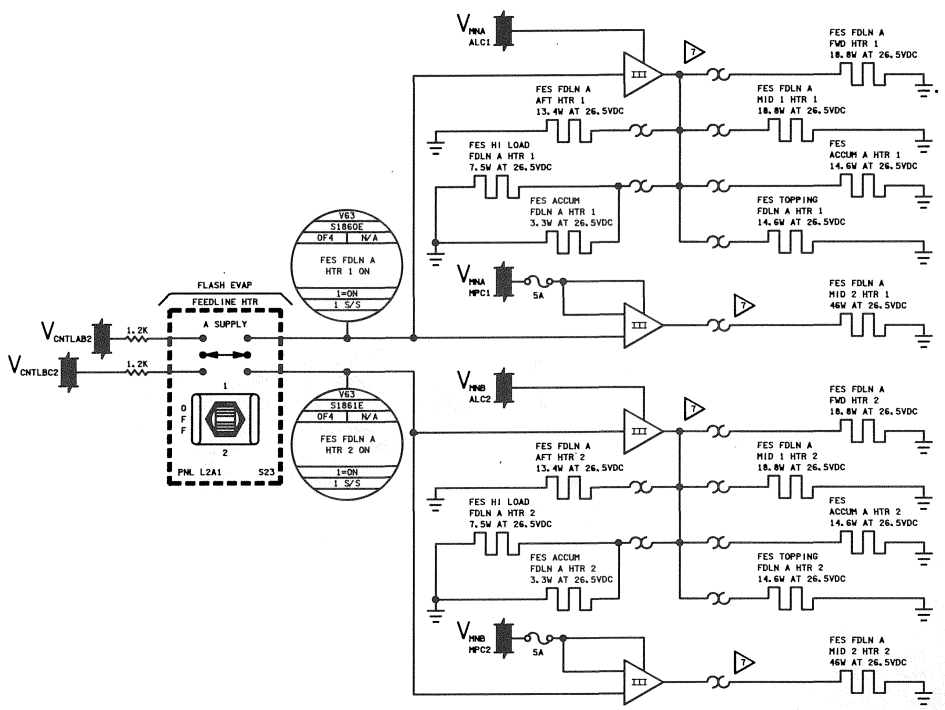

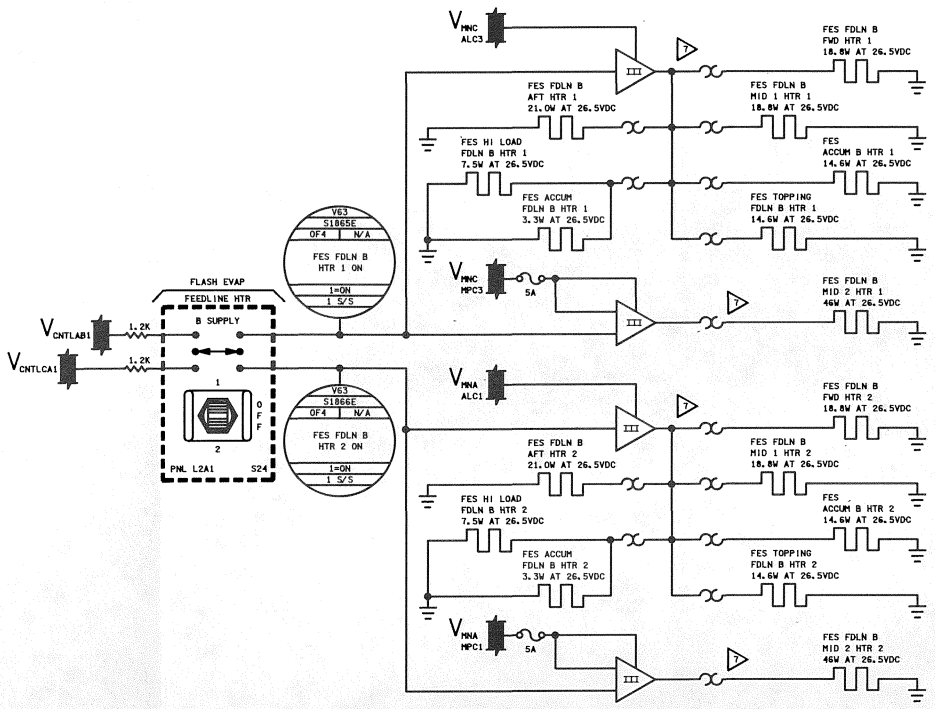

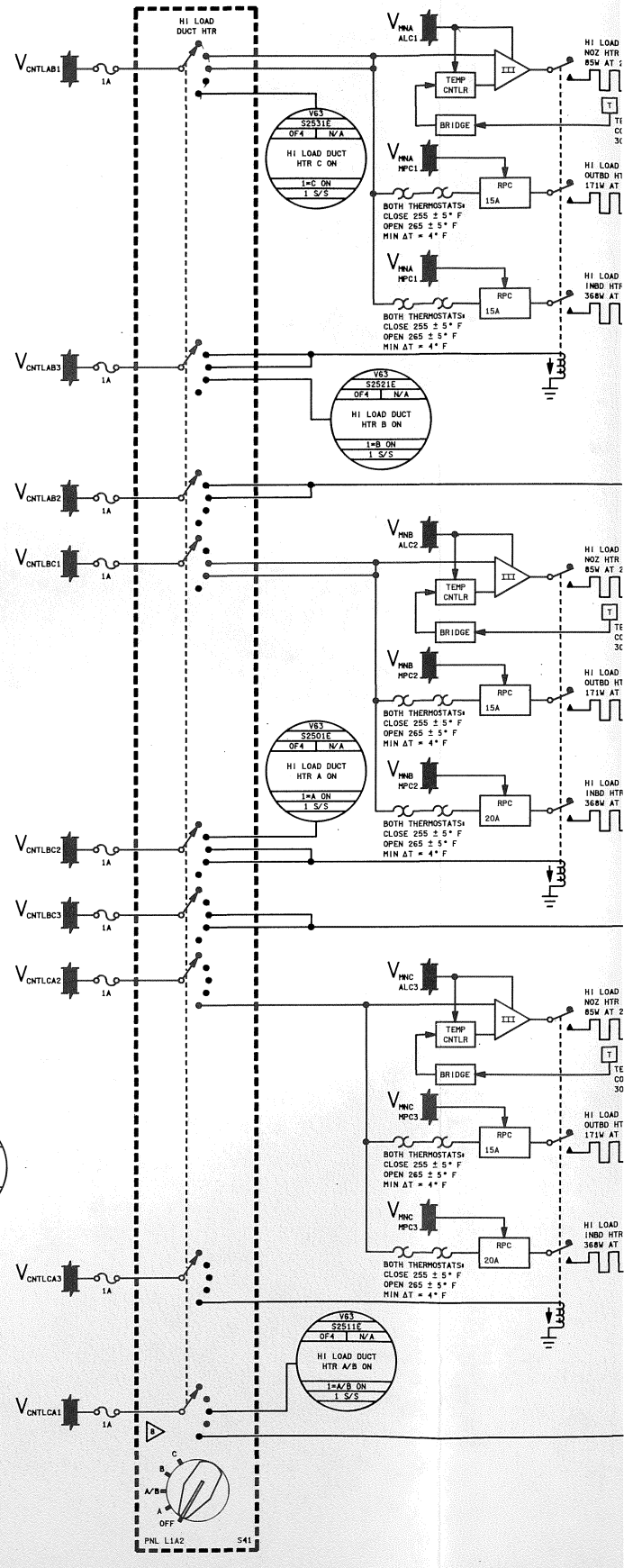

BASIC REV E-1

DATE: 06/01/92	NAME: MAC	VERSION BPT: 17
DATE: 11/17/92	NAME: BJB	VERSION BPT: 18
DATE: 12/18/92	NAME: VSH	VERSION INK: 8

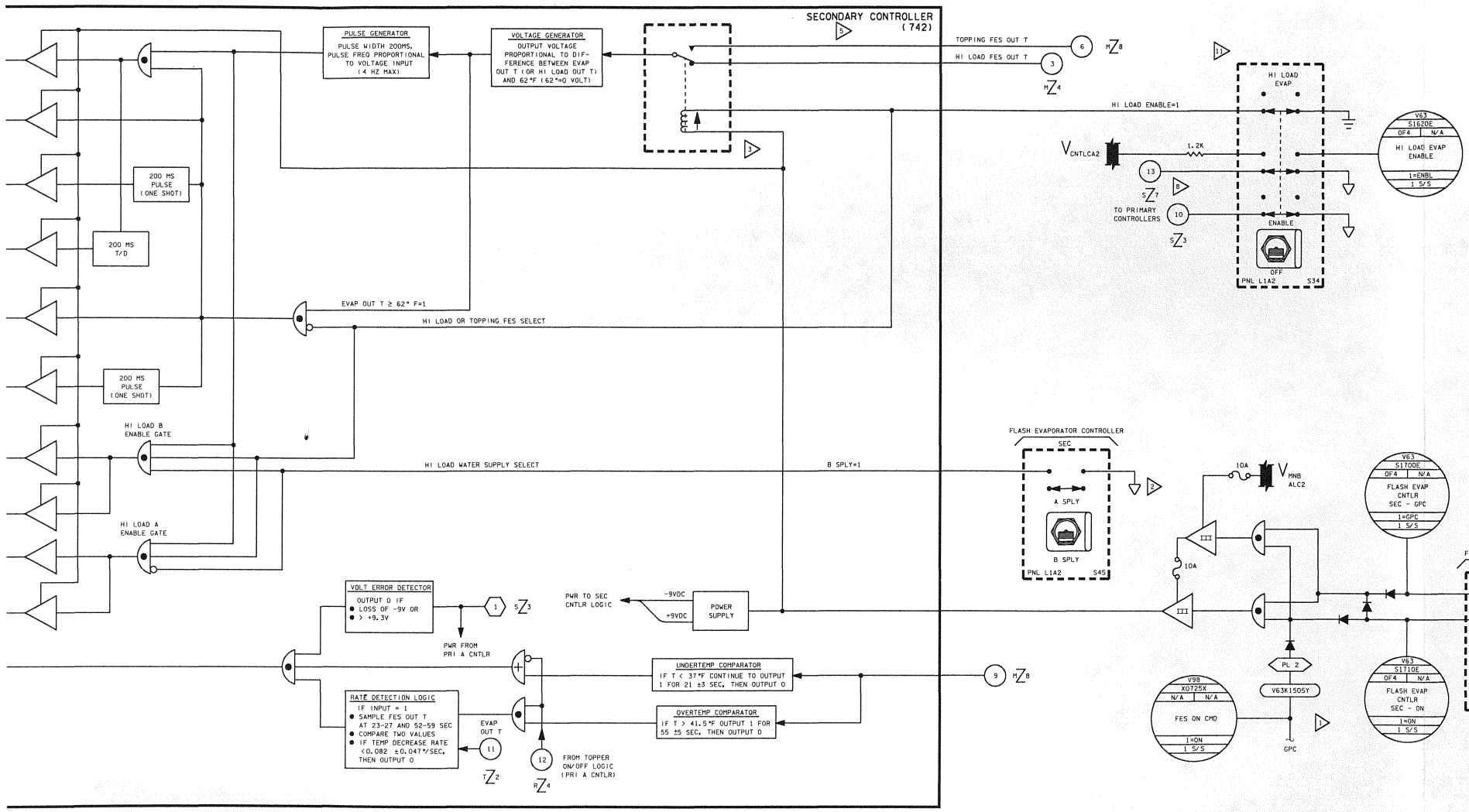

8

7

6

5

4

3

2

1

12▷ THE MIDPOINT TEMPERATURE SENSOR ASSEMBLY IS REDESIGNED ON OV-103 ONLY, CONSISTING OF A LARGER MASS OF METAL. THIS RESULTS IN A SLOWER RESPONSE FOR THE TEMPERATURE CHANGE RATE INPUT TO THE FES CONTROLLERS, MAKING OV-103 MORE SUSCEPTIBLE TO OVERTEMPERATURE SHUTDOWN DURING FULL-UP FES OPERATION

13▷ HI-LOAD EVAP NOMINAL MAX PULSE RATE:
DUTY CYCLE: 80.2%
FREQUENCY: 4HZ
FLOW: 135 LBS/HR

14▷ TOPPING EVAP NOMINAL MAX PULSE RATE:
DUTY CYCLE: 80.2%
FREQUENCY: 4HZ
FLOW: 50.4 LBS/HR

11▷ WHEN THE SECONDARY HI-LOAD IS ENABLED AFTER SECONDARY TOPPER USE, THE HI-LOAD PULSER VALVES INITIALLY PULSE AT SAME RATE AS PREVIOUSLY - SELECTED TOPPER VALVES. THIS COULD CAUSE AN UNDERTEMP SITUATION

10. TEMPERATURE SUMMARY:

ITEM	T, °F	SENSOR
PRI A/B CONTROL BAND	38.45 - 40	EVAP OUT T
MIN STARTUP FROM OFF	> 47.0	EVAP OUT T
STARTUP, AUTO FROM STANDBY	≥ 41 ±0.25	MIDPOINT T
STANDBY FROM OP	≤ 40 ±0.25	MIDPOINT T
HI-LOAD START TEMP	≥ 62 ±2	MIDPOINT T
HI-LOAD TO STANDBY	≤ 43.0	
UNDERTEMP SHUTDOWN	< 37.0 FOR TWO 20-SEC PERIODS AND $dT/d\theta$ < 0.082 ± 0.047 DEG/SEC	
SEC CONTROLLER	62 ±2	MIDPOINT T FOR HI-LOAD, EVAP OUT T FOR TOPPER

9. REFER TO TABLE T-I FOR DRAWING REFERENCES

8▷ LOGIC 1 IF HI LOAD EVAP ENABLED
LOGIC 0 IF HI LOAD EVAP OFF

7▷ FES HEAT REJECTION AND INLET TEMPERATURE LIMITS

CONTROLLER	FREON LOOPS OPERATING	FES OPERATING	MAXIMUM HEAT REJECTION (BTU/HR)		PREDICTED MAX INLET TEMP WITH CONTROLLED OUTLET °F	
			DESIGN	TEST	BYP FLOW*	RAD FLOW*
PRIMARY (T = 39°F) OUT	BOTH	BOTH	131,000	148,000	136	147
		TOPPING	30,000	39,000	66	69
	LOOP 1	BOTH	67,500	92,800	165	177
		TOPPING		24,600	73	76
	LOOP 2	BOTH	67,500	127,600	207	224
		TOPPING		37,600	89	95
SECONDARY (T = 62°F) OUT	BOTH	HI LOAD	67,500	113,100	138	146
		TOPPING	67,500	76,800	114	119
	LOOP 2	HILOAD		44,200	120	127

* FLOW RATES (LB/HR) FOR OV102 GROUND FLOW TEST
FCA IN "BYPASS" POSITION: LOOP 1 PUMP FLOW RATE 2935
LOOP 2 PUMP FLOW RATE 3087
FCA IN "RADIATOR" POSITION: LOOP 1 PUMP FLOW RATE 2657
LOOP 2 PUMP FLOW RATE 2692

6. CORES - .075 INCHES THICK CYLINDER, DUAL PASSAGE HX
14.5 INCHES LONG AND 11.5 INCHES I.D.
CONSTRUCTED OF ALUMINUM.
HIGH LOAD - FCL 1 FLOWS INSIDE PASSAGE/FCL 2 FLOWS OUTSIDE PASSAGE OF CORE
TOPPER - FCL 2 FLOWS INSIDE PASSAGE/FCL 1 FLOWS OUTSIDE PASSAGE OF CORE

5▷ SECONDARY CONTROLLER:
- NO SHUTDOWN LOGIC
- 62°F CNTL POINT
- WHEN HI LOAD SW OFF - TOPPER ENABLE (BOTH FEEDLINES)
SECONDARY TOPPER USES BOTH A AND B FEEDLINES/PULSER VLVS
- SEC HILOAD USES FEEDLINE A OR B

4▷ PRIMARY CNTLR:
- A&B IDENTICAL EXCEPT FOR REDUNDANT SHUTDOWN LOGIC FROM SEC CONTROLLER TO A CNTLR
- 39 ±1°F CNTL POINT
- ALL LOGIC RESET AFTER PWR RESET
- PRI A USES FEEDLINE A
- PRI B USES FEEDLINE B

3▷ SOLID STATE SWITCH

2▷ INTERNAL LOGIC GROUND (±9 VDC GROUND)

NOTES:

1▷ WHEN SWITCH IS IN GPC POSITION, EVAPORATORS ARE COMMANDED ON DURING ASCENT (MM 103-106 OR TRANSITION TO 601) AND COMMANDED OFF AT ≈ 100,000 FEET DURING ENTRY (MM 305 OR MM 603)

18▷ ** - RATE FEEDBACK COMPENSATES FOR THERMAL LAG AND TRANSPORT TIME

18▷ ERROR SIGNAL PULSE FREQUENCY 0.066 HZ/DEG F OF TEMP DIFFERENCE BETWEEN REF SET POINT AND OUTLET TEMP

17▷ WHEN MIDPOINT TEMP IS < 40 ±0.25 DEG F, THE TOPPING FES IS IN STANDBY AND UNDERTEMP SHUTDOWN IS INHIBITED

16▷ INITIAL SHUTDOWN TEMP SENSOR READING IS TAKEN 5 SEC AFTER TURN-ON. IT IS COMPARED TO A SAMPLE 19-22 SEC LATER, BUT THE RESULT IS NOT USED. SUBSEQUENT SAMPLE COMPARISONS 29-32 SEC LATER ARE USED TO DETERMINE RATE. SHUTDOWN WILL OCCUR IF RATE IS < 0.082 ±0.047 DEG F/SEC

15▷ HI-LOAD ISO VLV AND PULSER VLV ARE PULSED SIMULTANEOUSLY

*3 FES 2

SIGNATURE		DATE	NATIONAL AERONAUTICS AND SPACE ADMINISTRATION LYNDON B. JOHNSON SPACE CENTER HOUSTON, TEXAS
DSGN	VIC ORTIZ	8/9/82	
DR			
ENGR	V. HOWARD		FLASH EVAPORATOR SUBSYSTEM
ENGR			
APP			
APP			SPACE SHUTTLE / DWG NO 7.3
OMNIPLAN	S.K. Kimbell 1-21-83		ALL
L1R E	PCN 2		126.5 X 34 / PAGE SHEET 2 OF 2

BASIC REV E-2

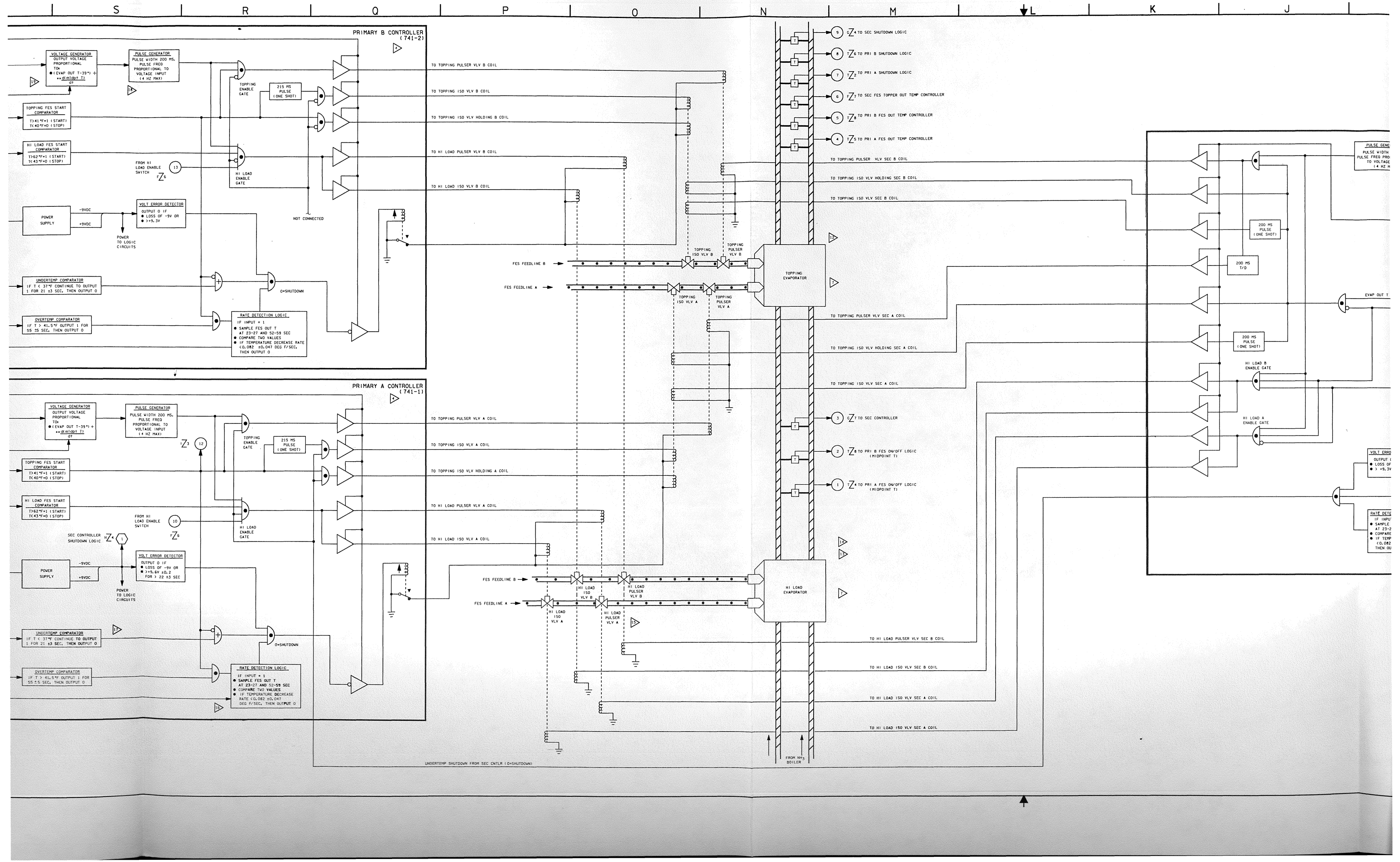

S
R
Q
P
O
N
M
L
K
J
PRIMARY B CONTROLLER (741-2)
VOLTAGE GENERATOR
OUTPUT VOLTAGE PROPORTIONAL TO:
● (EVAP OUT T-39°) + ** d(mldpt T) / dt
PULSE GENERATOR
PULSE WIDTH 200 MS. PULSE FREQ PROPORTIONAL TO VOLTAGE INPUT (4 HZ MAX)
TOPPING ENABLE GATE
215 MS PULSE (ONE SHOT)
TOPPING FES START COMPARATOR
T>41°F=1 (START)
T<40°F=0 (STOP)
HI LOAD FES START COMPARATOR
T>62°F=1 (START)
T<43°F=0 (STOP)
FROM HI LOAD ENABLE SWITCH
HI LOAD ENABLE GATE
NOT CONNECTED
POWER SUPPLY
-9VDC
+9VDC
POWER TO LOGIC CIRCUITS
VOLT ERROR DETECTOR
OUTPUT 0 IF
● LOSS OF -9V OR
● >+9.3V
UNDERTEMP COMPARATOR
IF T < 37°F CONTINUE TO OUTPUT 1 FOR 21 ±3 SEC, THEN OUTPUT 0
0=SHUTDOWN
OVERTEMP COMPARATOR
IF T > 41.5°F OUTPUT 1 FOR 55 ±5 SEC, THEN OUTPUT 0
RATE DETECTION LOGIC
IF INPUT = 1
● SAMPLE FES OUT T AT 23-27 AND 52-59 SEC
● COMPARE TWO VALUES
● IF TEMPERATURE DECREASE RATE <0.082 ±0.047 DEG F/SEC, THEN OUTPUT 0
PRIMARY A CONTROLLER (741-1)
VOLTAGE GENERATOR
OUTPUT VOLTAGE PROPORTIONAL TO:
● (EVAP OUT T-39°) + ** d(mldpt T) / dt
PULSE GENERATOR
PULSE WIDTH 200 MS. PULSE FREQ PROPORTIONAL TO VOLTAGE INPUT (4 HZ MAX)
TOPPING ENABLE GATE
215 MS PULSE (ONE SHOT)
TOPPING FES START COMPARATOR
T>41°F=1 (START)
T<40°F=0 (STOP)
HI LOAD FES START COMPARATOR
T>62°F=1 (START)
T<43°F=0 (STOP)
FROM HI LOAD ENABLE SWITCH
HI LOAD ENABLE GATE
SEC CONTROLLER SHUTDOWN LOGIC
POWER SUPPLY
-9VDC
+9VDC
POWER TO LOGIC CIRCUITS
VOLT ERROR DETECTOR
OUTPUT 0 IF
● LOSS OF -9V OR
● >+9.6V ±0.2 FOR > 22 ±3 SEC
UNDERTEMP COMPARATOR
IF T < 37°F CONTINUE TO OUTPUT 1 FOR 21 ±3 SEC, THEN OUTPUT 0
0=SHUTDOWN
OVERTEMP COMPARATOR
IF T > 41.5°F OUTPUT 1 FOR 55 ±5 SEC, THEN OUTPUT 0
RATE DETECTION LOGIC
IF INPUT = 1
● SAMPLE FES OUT T AT 23-27 AND 52-59 SEC
● COMPARE TWO VALUES
● IF TEMPERATURE DECREASE RATE <0.082 ±0.047 DEG F/SEC, THEN OUTPUT 0
TO TOPPING PULSER VLV B COIL
TO TOPPING ISO VLV B COIL
TO TOPPING ISO VLV HOLDING B COIL
TO HI LOAD PULSER VLV B COIL
TO HI LOAD ISO VLV B COIL
TO TOPPING PULSER VLV A COIL
TO TOPPING ISO VLV A COIL
TO TOPPING ISO VLV HOLDING A COIL
TO HI LOAD PULSER VLV A COIL
TO HI LOAD ISO VLV A COIL
FES FEEDLINE B
FES FEEDLINE A
TOPPING ISO VLV B
TOPPING PULSER VLV B
TOPPING ISO VLV A
TOPPING PULSER VLV A
TOPPING EVAPORATOR
HI LOAD ISO VLV B
HI LOAD PULSER VLV B
HI LOAD ISO VLV A
HI LOAD PULSER VLV A
HI LOAD EVAPORATOR
FROM NH3 BOILER
UNDERTEMP SHUTDOWN FROM SEC CNTLR (0=SHUTDOWN)
TO SEC SHUTDOWN LOGIC
TO PRI B SHUTDOWN LOGIC
TO PRI A SHUTDOWN LOGIC
TO SEC FES TOPPER OUT TEMP CONTROLLER
TO PRI B FES OUT TEMP CONTROLLER
TO PRI A FES OUT TEMP CONTROLLER
TO TOPPING PULSER VLV SEC B COIL
TO TOPPING ISO VLV HOLDING SEC B COIL
TO TOPPING ISO VLV SEC B COIL
TO TOPPING PULSER VLV SEC A COIL
TO TOPPING ISO VLV HOLDING SEC A COIL
TO TOPPING ISO VLV SEC A COIL
TO SEC CONTROLLER
TO PRI B FES ON/OFF LOGIC (MIDPOINT T)
TO PRI A FES ON/OFF LOGIC (MIDPOINT T)
TO HI LOAD PULSER VLV SEC B COIL
TO HI LOAD ISO VLV SEC B COIL
TO HI LOAD ISO VLV SEC A COIL
TO HI LOAD ISO VLV SEC A COIL
200 MS PULSE (ONE SHOT)
200 MS T/D
200 MS PULSE (ONE SHOT)
HI LOAD B ENABLE GATE
HI LOAD A ENABLE GATE
EVAP OUT T

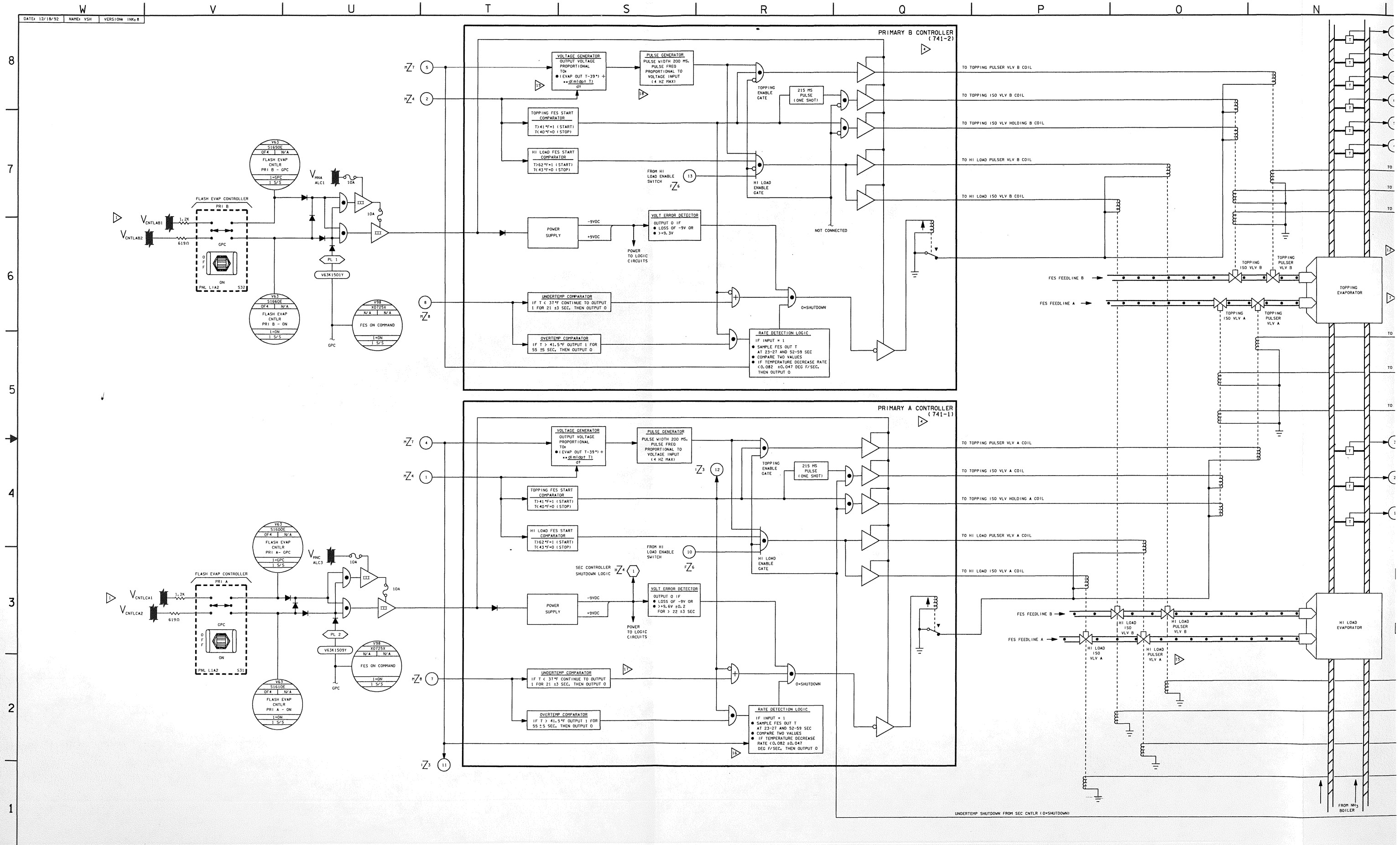
DATE: 12/18/92
NAME: VSH
VERSION: INK.8
PRIMARY B CONTROLLER (741-2)
PRIMARY A CONTROLLER (741-1)
VOLTAGE GENERATOR
OUTPUT VOLTAGE PROPORTIONAL TO
PULSE GENERATOR
PULSE WIDTH 200 MS. PULSE FREQ PROPORTIONAL TO VOLTAGE INPUT (4 HZ MAX)
TOPPING FES START COMPARATOR
HI LOAD FES START COMPARATOR
TOPPING ENABLE GATE
215 MS PULSE (ONE SHOT)
HI LOAD ENABLE GATE
FROM HI LOAD ENABLE SWITCH
NOT CONNECTED
POWER SUPPLY
-9VDC
+9VDC
POWER TO LOGIC CIRCUITS
VOLT ERROR DETECTOR
UNDERTEMP COMPARATOR
OVERTEMP COMPARATOR
RATE DETECTION LOGIC
O=SHUTDOWN
TO TOPPING PULSER VLV B COIL
TO TOPPING ISO VLV B COIL
TO TOPPING ISO VLV HOLDING B COIL
TO HI LOAD PULSER VLV B COIL
TO HI LOAD ISO VLV B COIL
TO TOPPING PULSER VLV A COIL
TO TOPPING ISO VLV A COIL
TO TOPPING ISO VLV HOLDING A COIL
TO HI LOAD PULSER VLV A COIL
TO HI LOAD ISO VLV A COIL
FES FEEDLINE B
FES FEEDLINE A
TOPPING ISO VLV B
TOPPING PULSER VLV B
TOPPING ISO VLV A
TOPPING PULSER VLV A
TOPPING EVAPORATOR
HI LOAD ISO VLV B
HI LOAD PULSER VLV B
HI LOAD ISO VLV A
HI LOAD PULSER VLV A
HI LOAD EVAPORATOR
FROM NH3 BOILER
UNDERTEMP SHUTDOWN FROM SEC CNTLR (O=SHUTDOWN)
FLASH EVAP CONTROLLER
FLASH EVAP CNTLR PRI B - GPC
FLASH EVAP CNTLR PRI B - ON
FLASH EVAP CNTLR PRI A - GPC
FLASH EVAP CNTLR PRI A - ON
FES ON COMMAND
GPC
PNL L1A2
S32
S31
PL 1
PL 2
V63K1501Y
V63K1509Y
V98 X0725X
10A
1.2K
619Ω

BASIC REV E-2

DATE: 06/12/92	NAME: VSH	VERSION: BPT, 23
DATE: 06/25/92	NAME: VSH	VERSION: INK, 3
DATE: 10/02/92	NAME: BJT	VERSION: INK, 4

54.52% OF TOTAL FLOW

45.48% OF TOTAL FLOW

4.53% OF TOTAL FLOW

40.95% OF TOTAL FLOW

AVIONICS COLD PLATES (FLIGHT DECK MDM) 1 SQ FT

MDM COLD PLATES: (146 BTU/HR -MAX LOAD) MDM OF 4

0.161 INCH ORIFICE

0.161 INCH ORIFICE

2

V61 T2650A OF3 | OF3 — AV BAY 2 AIR OUT TEMP — 45 TO 145° F — 1 S/S — C&W

ECLSS SC3 AC10B — 6.8

NOMINAL 1 FAN AIR FLOW 875 LBS/HR

FAN B — 180 WATTS — 180 WATTS — FAN A

AIR/H_2O HX

ΔZ 4 — 6.2

HX: (6320 BTU/HR - MAX LOAD)

AVIONICS BAY 2 26.76% OF TOTAL FLOW

COLD PLATES 30 SQ FT

ECLSS SC 3 AC10B — ECLSS SC 3 AC10B — 6.8

V61 T2618A OF3 — LP 1 H_2O AV BAY 2 HX OUT T — 32 TO 122° F — 1 S/S

V61 T2627A OF1 | OF1 — LP 1 H_2O AV BAY 2 C/P OUT T — 25 TO 130° F — 1 S/S

V61 T2619A OF3 — LP 2 H_2O AV BAY 2 HX OUT T — 32 TO 122° F — 1 S/S

V61 T2628A OF2 | OF2 — LP 2 H_2O AV BAY 2 C/P OUT T — 25 TO 130° F — 1 S/S

0.116 INCH ORIFICE

0.116 INCH ORIFICE

3A

V61 T2661A OF1 | OF1 — AV BAY 3 AIR OUT TEMP — 45 TO 145° F — 1 S/S — C&W

ECLSS SC4 AC20B — 6.8

NOMINAL 1 FAN AIR FLOW 675 LBS/HR

FAN B — 180 WATTS — 180 WATTS — FAN A

AIR/H_2O HX

ΔZ 2 — 6.2

HX: (3000 BTU/HR - MAX LOAD)

AVIONICS BAY 3A 39.33% OF TOTAL FLOW

COLD PLATES 32 SQ FT

ECLSS SC 4 AC20B — ECLSS SC 4 AC20B — 6.8

V61 T2621A OF1 — LP 1 H_2O AV BAY 3A HX OUT T — 32 TO 122° F — 1 S/S

V61 T2630A OF1 | OF1 — LP 1 H_2O AV BAY 3A C/P OUT T — 25 TO 130° F — 1 S/S

V61 T2622A OF1 — LP 2 H_2O AV BAY 3A HX OUT T — 32 TO 122° F — 1 S/S

V61 T2631A OF2 | OF2 — LP 2 H_2O AV BAY 3A C/P OUT T — 25 TO 130° F — 1 S/S

BAY 3A COLD PLATES: (4900 BTU/HR - MAX LOAD)
NTWK SIG PROC NO 1, NO 2
S-BD FM XMTR NO 1, NO 2
S-BD XPNDR NO 1, NO 2
S-BD PWR AMP NO 1, NO 2
S-BD PREAMP ASSY NO 1, NO 2
UHF ATC/EVA XCVR (FLT 7)
COMSEC UNIT NO 1, NO 2 (DOD ONLY)
KU-BD SIG PROC (FLT 5)
KU-BD RAD/COM ASSY NO 1, NO 2 (FLT 5)
DED SIG COND OF 3
AC30A INV NO 7
AC30B INV NO 8
AC30C INV NO 9
LD CNTLR ASSY NO 3
PWR CNTLR ASSY NO 3
GRND CMD INT UNIT A, UNIT B
MOTOR CNTL ASSY NO 3
MDM FF 3
MDM OF 3
S-BD ANT SW

3B

AVIONICS BAY 3B 6.15% OF TOTAL FLOW

COLD PLATES 5 SQ FT

BAY 3B COLD PLATES: (100 BTU/HR - MAX LOAD)
KU-BD COMM B ELEC ASSY NO 1
KU-BD COMM B ELEC ASSY NO 2
MTU

CABIN

MID FUSELAGE 576 BULKHEAD

3.55% OF TOTAL FLOW

PAYLOAD BAY FLOOD LIGHT COLD PLATE 47.6 SQ IN 800 BTU/HR - MAX LOAD

X_O=576
Y_O=0
Z_O=488

WINDOW THERMAL CONDITIONING SYSTEM (W1,W2,W3)

PORT — PORT — STBD — STBD

WINDOW THERMAL CONDITIONING SYSTEM (W4,W5,W6,W8,W9) 475 BTU/HR - MAX LOAD

WINDOW THERMAL CONDITIONING SYSTEM (W7,W10)

30V61 TP62

30V61 TP63

1

V61 T2645A OF2 | OF2 — AV BAY 1 AIR OUT TEMP — 45 TO 145° F — 1 S/S — C&W

ECLSS SC2 AC30B — 6.8

NOMINAL 1 FAN AIR FLOW 875 LBS/HR

FAN B — 180 WATTS — 180 WATTS — FAN A

AIR/H_2O HX

ΔZ 7 — 6.2

AVIONICS BAY 1 27.76% OF TOTAL FLOW

COLD PLATES 25 SQ FT

ECLSS SC 2 AC30B — ECLSS SC 2 AC30B — 6.8

V61 T2615A OF2 — LP 1 H_2O AV BAY 1 HX OUT T — 32 TO 122° F — 1 S/S

V61 T2624A OF2 | OF2 — LP 1 H_2O AV BAY 1 C/P OUT T — 25 TO 130° F — 1 S/S

V61 T2616A OF2 — LP 2 H_2O AV BAY 1 HX OUT T — 32 TO 122° F — 1 S/S

V61 T2625A OF2 | OF2 — LP 2 H_2O AV BAY 1 C/P OUT T — 25 TO 130° F — 1 S/S

0.125 INCH ORIFICE

0.125 INCH ORIFICE

BAY 2 COLD PLATES: (2950 BTU/HR - MAX LOAD)
RJDF NO 2A
RJDF NO 2B
RADAR ALT NO 2
PAYLOAD INTERN NO 1 (FLT 5)
PAYLOAD INTERN NO 2 (FLT 5)
PAYLOAD SIG PROC NO 1 (FLT 5)
PAYLOAD SIG PROC NO 2 (FLT 5)
PCMMU NO 2
OPS 1 RCDR (MAINT LOOP)
OPS 2 RCDR (MAINT LOOP)
DED SIG COND OF 2
AC20A INV NO 4
AC20B INV NO 5
AC20C INV NO 6
LD CNTLR ASSY NO 2
PWR CNTLR ASSY NO 2
MOTOR CNTL ASSY NO 2
MDM FF 2
MDM FF 4
MASS MEM NO 2
MDM OF 2
MDM PL 2

BAY 1 COLD PLATES: (2950 BTU/HR - MAX LOAD)
RADAR ALT NO 1
AUDIO CNTR NO 1
AUDIO CNTR NO 2
PCMMU NO 1
PAYLOAD RCDR
DED SIG COND OF 1
PAYLOAD DATA INTRLVR (FLT 5)
AC10A INV NO 1
AC10B INV NO 2
AC10C INV NO 3
LD CNTLR ASSY NO 1
PWR CNTLR ASSY NO 1
EVLSS PWR SUP/BAT CHGR (FLT 7)
MOTOR CNTL ASSY NO 1
MDM FF 1
MASS MEM NO 1
MDM OF 1
MDM LF 1 (GSE)
MDM PL 1

80V61 TP60

80V61 TP61

HX: (6000 BTU/HR - MAX LOAD)

80V61 TP56

80V61 TP57

0.187 INCH ORIFICE

0.187 INCH ORIFICE

LB/HR/LOOP

V MNA FPC1 — (V MNB FPC2) — MCA LOGIC MNA(MNB) FWD 1(2) — V CNTLAB3 — (V CNTLBC3) — RPC 5A — V MNA FMC1 — (V MNB FMC2) — ON — OFF — ENL MA73C▸A — SL1 (ENL MA73C▸A) (3S)

14. SODB, AMENDMENT 204:

VEH	ICH FLOW (LB/HR)	BYP FLOW (LB/HR)
099	463-1174	0-922
102	500-1280 *	0-880 *
103	420-1169	0-855
104	482-1200	0-831

* RI DOC. SEH-ITA-82-176T

13. IF NECESSARY, IT IS POSSIBLE TO PERFORM IFM TO SWAP THE POWER SOURCES BETWEEN PUMP B OF LOOP 1 AND PUMP OF LOOP 2. PUMP A OF LOOP 1 IS INACCESSIBLE TO CREW PLUS IT HAS A SHORT POWER CABLE

12. H_2O LOOP COMPONENTS:
QUAL PRESSURE = 90 ±5 PSIG
PROOF PRESSURE = 135 ±5 PSIG
BURST PRESSURE = 180 PSIG

11. FLOW RATE MEASUREMENT IS BASED UPON PRESSURE DELTA ACROSS INTERCHANGER AND THUS RESPONSIVE TO LOOP TEMPERATURE FLUCTUATIONS

10. PER DVT TESTING - PUMP PERFORMANCE ON 2 ACB, 4 HR TEST:
5BX AVG DECREASE IN PUMP ΔP
47.3% AVG DECREASE IN LOOP FLOW
PUMP MOTOR HAS BEEN SPECIFIED FOR A LIFE OF 168 HOURS OPERATING ON 2 PHASES, BUT NO DATA IS AVAILABLE TO SUPPORT THIS

8. ALL 'MAXLOAD' HEAT LOADS ARE PER THE LATEST STS-3 ANALYSIS AND DO NOT REFLECT ALL EQUIPMENT ON.

7. H_2O LOOP LINES ARE 0.25 INCH STAINLESS STEEL TUBES WITH 0.25 INCH FIBERGLASS (TG 15000) WRAP (PART NO.: MB0135-024) AND CRES PROTECTIVE COVER. LINES TO FLOOD LIGHT COLDPLATE ARE 0.125 INCH TUBES WRAPPED TOGETHER WITH AL FOIL, SECURED WITH AL TAPE AND THEN COVERED BY 0.25 INCH FIBERGLASS BLANKET (PART NO.: MB0135-069) INSULATION

6. THE MDM PL2 SIGNAL WILL BE INITIALIZED IN THE BFS TO 1=ON FOR ALL PHASES. WHEN THE BFS HAS CONTROL OF THE PAYLOAD BUSES, THE LOOP 2 PUMP WILL BE ACTIVATED ANY TIME THE SW IS PLACED IN THE GPC POS

5. A GPC PUMP CYCLE SEQUENCE WILL BE INITIATED ANY TIME A TRANSITION IS MADE INTO SM OPS 2 (OR SM OPS 4). THE SEQUENCE WILL ISSUE A 6-MINUTE "PUMP OFF CMD FOLLOWED BY A 50-HOUR "PUMP OFF" CMD. THIS SEQUENCE OF CMDS WILL BE CONTINUOUSLY REPEATED WHILE IN SM OPS 2 (OR 4). THE ON-TIME (V92W064IC = 6 MIN) AND THE OFF-TIME (V92W064OC = 3000 MIN) ARE MEDABLE IN UNIT OF MINUTES AND HAVE NO UPPER OR LOWER LIMITS. CHANGING THE MEDABLE VALUES WILL HAVE NO EFFECT UNTIL THE NEXT CYCLE UNLESS OPS 2 (OR 4) IS DROPPED/RECALLED

4. THE AUTO POSITION IS USED FOR ORBIT OPERATIONS ONLY. ASCENT/ENTRY WILL USE MANUAL @ 950 LB/HR DUE TO THE HIGH HEAT LOADS AND THE 950 LB/HR NO. BEING THE OPTIMUM FLOW RATE DETERMINED BY ANALYSIS

3. THE H_2O BYPASS VALVE NON-ELECTRIC MANUAL OVERRIDE CONTROLS ARE LOCATED BELOW THE MID DECK FLOOR IN THE ECLSS BAY ON THE TOP OF THE VALVE ACTUATOR HOUSING. THEY WILL BE USED ONLY IN THE EVENT OF A TOTAL ELECTRICAL DRIVE FAILURE

2. LOOP VOLUME = 1810 CU IN = 65.3 LB OF H_2O (ACCUM NOT INCLUDED)
ACCUM:
VOLUME:
METAL BELLOWS FULLY EXTENDED - H_2O: 56 CU IN (1.81 LBS) GN_2: 100 CU IN
METAL BELLOWS FULLY COMPRESSED - H_2O: 6 CU IN (0.19 LBS) GN_2: 150 CU IN
N_2 CHARGE: 19 - 35 PSI AT 70 - 120 °F
VARIATION WITH TEMPERATURE = ~ 1 2/°F ~ 0.1 PSI/°F

NOTES: 1. REPRESENTATION OF TRIAC CONTROLLED SOLID STATE RELAY

*4 ARS H_2O

SIGNATURE		DATE	NATIONAL AERONAUTICS AND SPACE ADMINISTRATION LYNDON B. JOHNSON SPACE CENTER HOUSTON, TEXAS
OSON LINDA DUMIS		10/16/78	
DR			ARS H_2O COOLANT LOOPS
ENGR J. SPIVEY			
ENGR		7/13/92	
APP		7/15/92	
APP			SPACE SHUTTLE — DWG NO 7.4
OMNIPLAN		10-5-92	ALL
LTR E	PCN 2		126.5 X 34 — PAGE — SHEET 1 OF 1

BASIC REV E-2

S R Q P O N M L K J I

LOOP 1 PUMP/ACCUMULATOR PACKAGE

LOOP 2 PUMP/ACCUMULATOR PACKAGE

LOOP 2 H_2O BYPASS CNTLR

LOOP 1 H_2O BYPASS CNTLR

CABIN

MID FUSELAGE
576 BULKHEAD

INTERCHANGER

AVIONICS BAY 3B
6.15% OF TOTAL FLOW

3B

COLD PLATES
5 SQ FT

54.52% OF TOTAL FLOW

45.48% OF TOTAL FLOW

4.53% OF TOTAL FLOW

40.95% OF TOTAL FLOW

0.161 INCH ORIFICE

0.187 INCH ORIFICE

BYPASS FLOW ADJUSTIBLE FROM 0 TO 1000 LB/HR/LOOP

INTERCHANGER FLOW ADJUSTIBLE FROM 450 TO 1200 LB/HR/LOOP

2520 BTU/HR – MAX LOAD

16300 BTU/HR – MAX LOAD

10120 BTU/HR – MAX LOAD

4000 BTU/HR – MAX LOAD

46300 BTU/HR MAX LOAD

TOTAL LCVG FLOW ~ 500 LB/HR

BAY 3B COLD PLATES= (100 BTU/HR – MAX

KU-BD COMM B ELEC ASSY NO 1
KU-BD COMM B ELEC ASSY NO 2
MTU

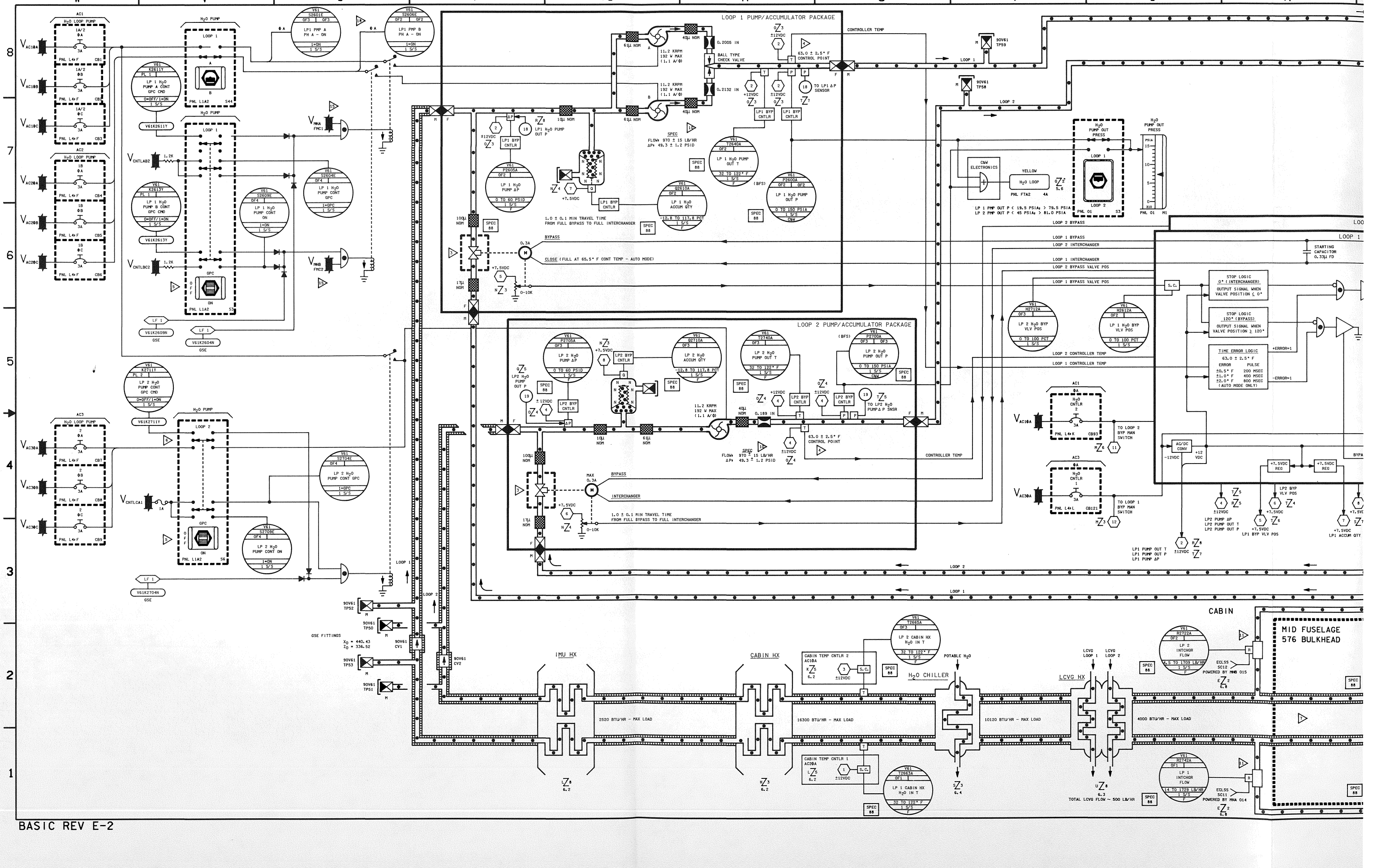

LOOP 1 PUMP/ACCUMULATOR PACKAGE
LOOP 2 PUMP/ACCUMULATOR PACKAGE
CONTROLLER TEMP
BALL TYPE CHECK VALVE
BYPASS
CLOSE (FULL AT 65.5° F CONT TEMP - AUTO MODE)
INTERCHANGER
1.0 ± 0.1 MIN TRAVEL TIME FROM FULL BYPASS TO FULL INTERCHANGER
STOP LOGIC 0° (INTERCHANGER)
STOP LOGIC 120° (BYPASS)
TIME ERROR LOGIC
CABIN
MID FUSELAGE 576 BULKHEAD
IMU HX
CABIN HX
H2O CHILLER
LCVG HX
2520 BTU/HR - MAX LOAD
16300 BTU/HR - MAX LOAD
10120 BTU/HR - MAX LOAD
4000 BTU/HR - MAX LOAD
TOTAL LCVG FLOW ~ 500 LB/HR
GSE FITTINGS

BASIC REV E-2

DATE: 10/14/88	NAME: MDU	VERSION#: BPT.9
DATE: 10/19/88	NAME: BCH	VERSION#: INK.4
DATE: 08/18/90	NAME: MAG	VERSION#: INK.5

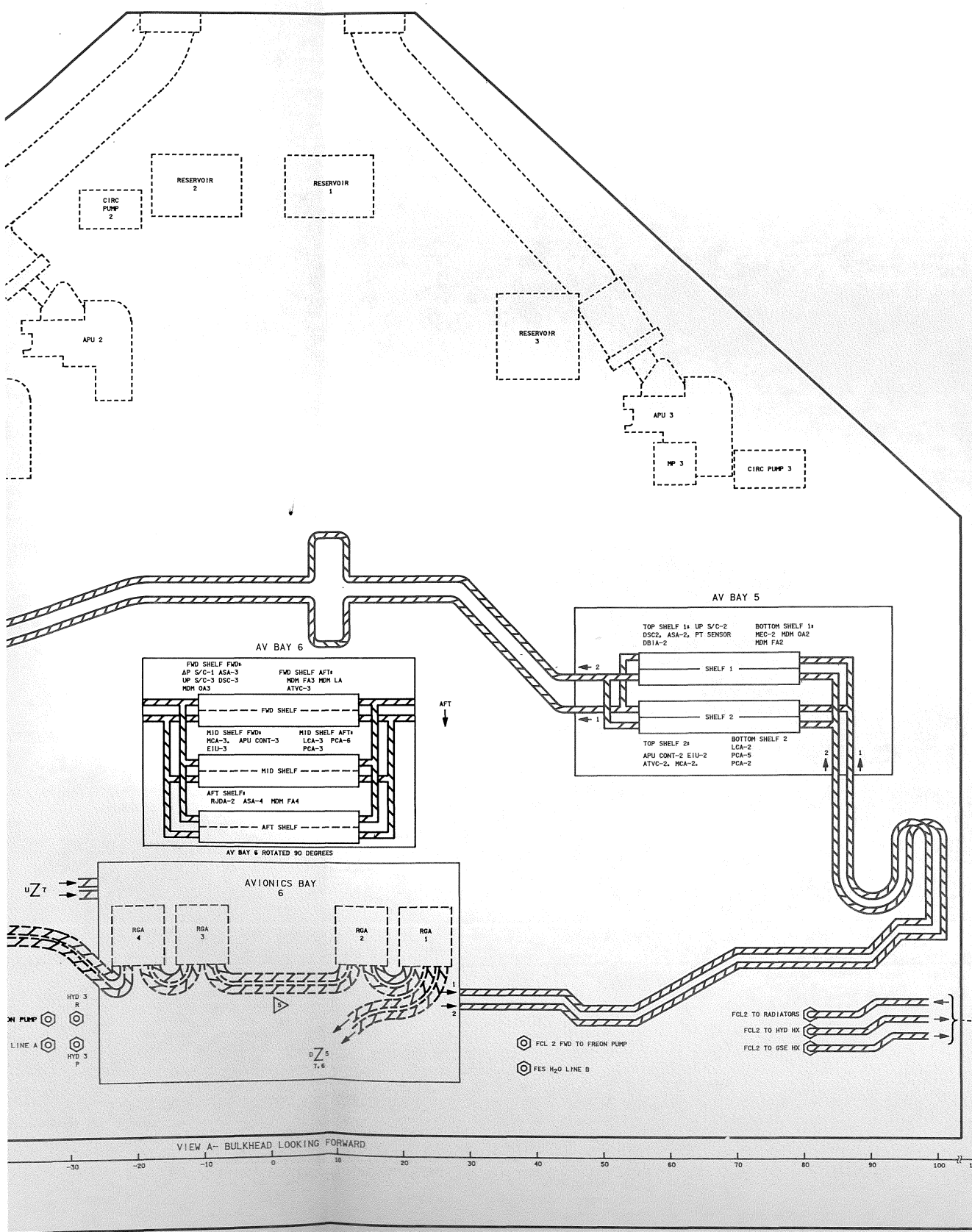

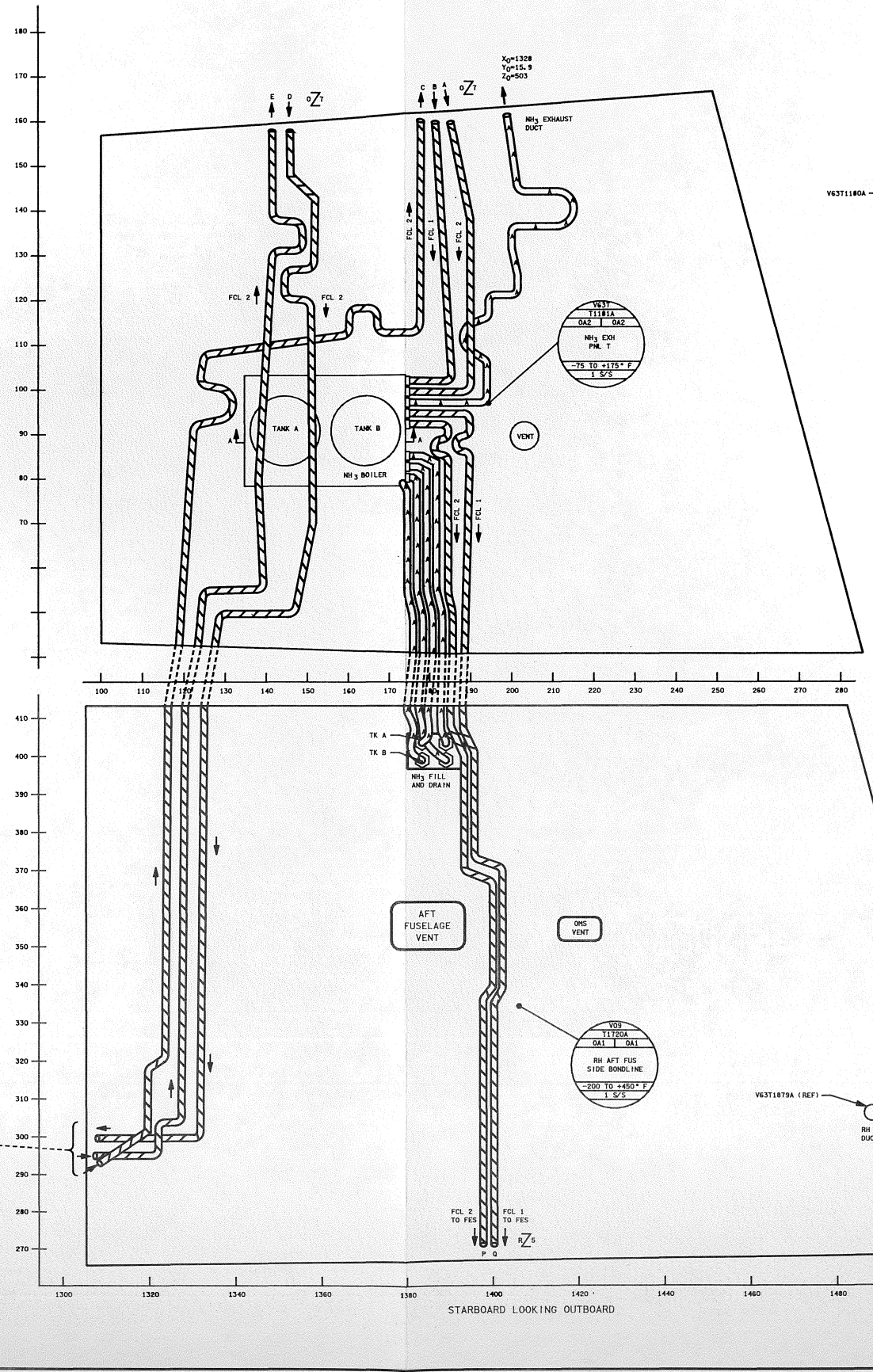

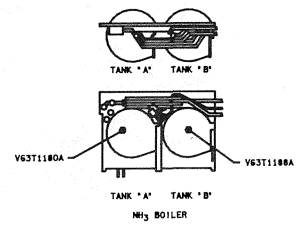

VIEW A-A

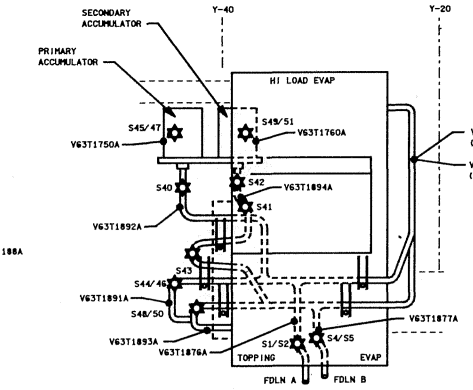

LOOKING FORWARD

FES HEATER ROUTING

THERMOSTAT	FEEDLINE	MTR SYS	MTR COVERAGE
S1	A	1	X1307 TO HI LO/TOPPER TEE
S2	A	2	SAME
S3	B	1	SAME
S4	B	2	SAME
S40	A	1	TOPPING LINE TEE TO ACCUMULATOR
S41	A	2	SAME
S42	B	1	SAME
S43	B	2	SAME
S44	A	1	HI LO/TOPPER TEE TO TOPPER VALVES
S45	A	1	ACCUMULATOR A AND HI LOAD LINE FROM HI LO/TOPPER TEE TO HI LOAD VALVES
S46	A	2	SAME AS S44
S47	A	2	SAME AS S45
S48	B	1	SAME AS S44
S49	B	1	SAME AS S45
S50	B	2	SAME AS S44
S51	B	2	SAME AS S45

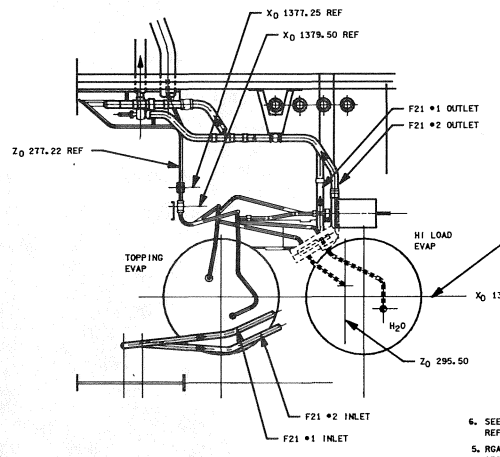

VIEW C-C

6. SEE TABLE T-I FOR VENDOR DRAWING REFERENCES
5. RGA ROUTING FORWARD OF 1302 BULKHEAD REF. DRAWING 7.6
4. Xo Yo Zo OMS POD COORDINATE SYSTEM AXIS DESIGNATION
3. TUBE ROUTING AND QUANTITY APPROXIMATE
2. REFERENCE DWG T.3 PAGE 1 OF 2 FOR HEATER WATTAGES.

NOTES: 1. LEGEND

OPERATIONAL INSTRUMENTATION ●

HEATED AND INSULATED

CONTROL THERMOSTAT (T/S) XXXX-T/S ID

FREON

AMMONIA

H_2O

5 TAF

SIGNATURE	DATE	NATIONAL AERONAUTICS AND SPACE ADMINISTRATION LYNDON B. JOHNSON SPACE CENTER HOUSTON, TEXAS	
DSGN MIKE BECKER	9/7/83		
DR			
ENGR J. SPIVEY	8/17/90	THERMAL AFT FUSELAGE	
ENGR	8-21-90		
APP	8/21/90		
APP		SPACE SHUTTLE	DWG NO 7.5
OMNIPLAN S.K. Lombardi 8-13-90		ALL	
LTR E PCN		126.5 X 34	PAGE SHEET 1 OF 1

BASIC REV E

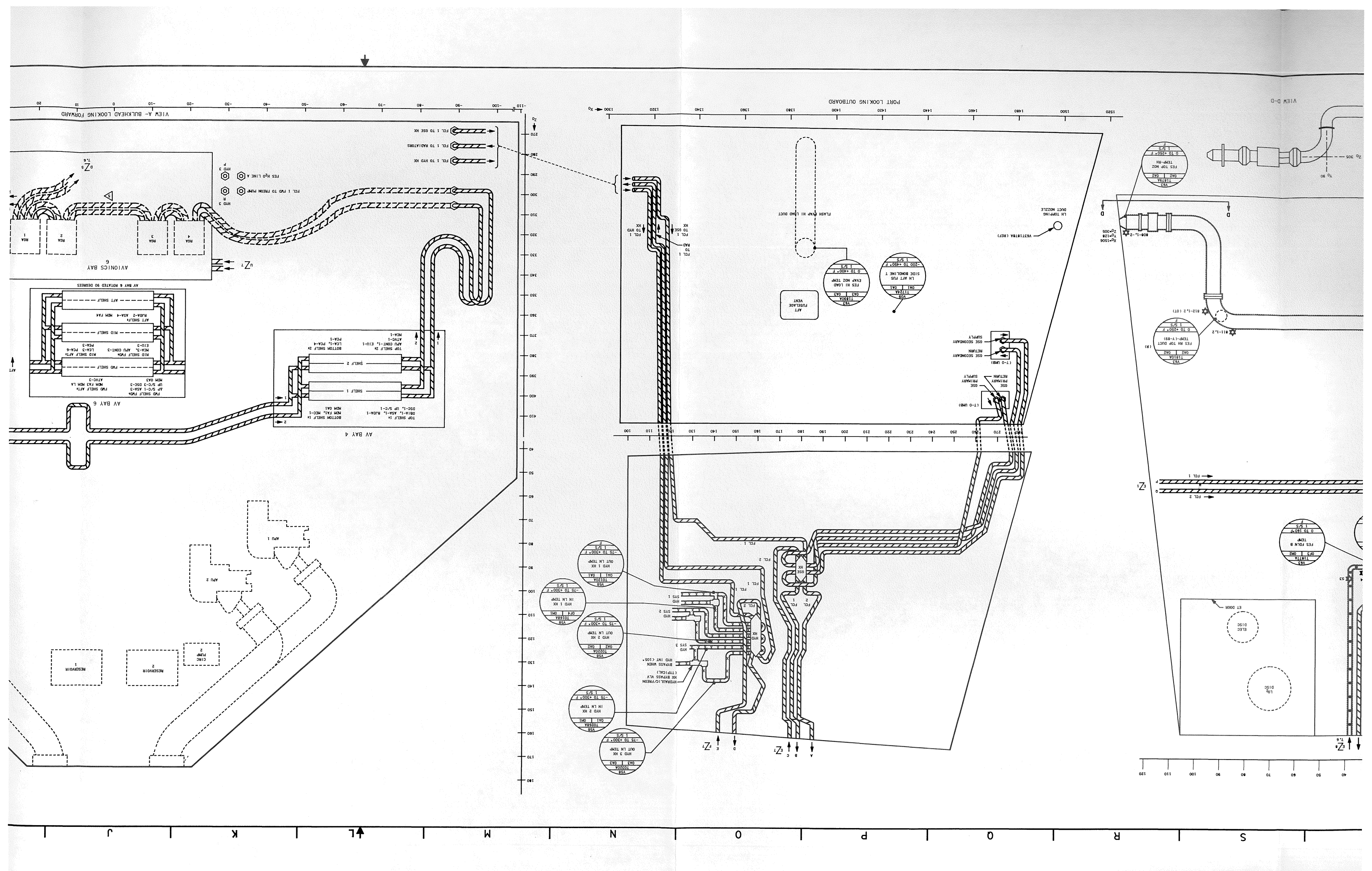
VIEW A- BULKHEAD LOOKING FORWARD
PORT LOOKING OUTBOARD
VIEW D-D
AVIONICS BAY 6
AV BAY 6
AV BAY 4
AV BAY 6 ROTATED 90 DEGREES
FCL 1 TO GSE HX
FCL 1 TO RADIATORS
FCL 1 TO HYD HX
FCL 1 FWD TO FREON PUMP
FES H2O LINE A
FLASH EVAP HI LOAD DUCT
LH TOPPING DUCT NOZZLE
V63T107BA (RED)
AFT FUSELAGE VENT
FES HI LOAD EVAP NOZ TEMP
0 TO +400° F
1 S/S
LH AFT FUS SIDE BONDLINE T
-200 TO +450° F
1 S/S
FES TOP NOZ TEMP-RH
0 TO +250° F
1 S/S
FES RH TOP DUCT TEMP-(Y-89)
0 TO +250° F
1 S/S
FES FDLN B TEMP
0 TO 160°F
1 S/S
HYD 1 HX OUT LN TEMP
-75 TO +300° F
1 S/S
HYD 1 HX IN LN TEMP
-75 TO +300° F
1 S/S
HYD 2 HX OUT LN TEMP
-75 TO +300° F
1 S/S
HYD 2 HX IN LN TEMP
-75 TO +300° F
1 S/S
HYD 3 HX OUT LN TEMP
-75 TO +300° F
1 S/S
HYDRAULIC/FREON HX BYPASS VLV (TYPICAL)
BYPASS WHEN HYD TEMP <105°
GSE SECONDARY RETURN
GSE SECONDARY SUPPLY
GSE PRIMARY RETURN
GSE PRIMARY SUPPLY
(T-O UMB)
ELEC DISC
LOX DISC
ET DOOR
RESERVOIR 1
RESERVOIR 2
CIRC PUMP 2
APU 1
APU 2
TOP SHELF 1A DDA-1, ASA-1, RDA-1 DSC-1, UP S/C-1
TOP SHELF 2A APU CONT-1, ECU-1 ATVC-1 MCA-1
BOTTOM SHELF 1A MDM FA1, MEC-1 MDM OA1
BOTTOM SHELF 2A LCA-1, PCA-4 PCA-1
SHELF 1
SHELF 2
FWD SHELF FMDM UP S/C-3 ASA-3 MDM FA3 MDM LA
FWD SHELF AFTA DSC-3 ATVC-3
MID SHELF AFTA LCA-3 PCA-6
MID SHELF FMDM MCA-3, APU CONT-3 ECU-3
MID SHELF RADA-2 ASA-4 MDM FA4
AFT SHELF
FWD SHELF
MID SHELF
AFT SHELF
AFT
FWD
RCA 1
RCA 2
RCA 3
RCA 4
HYD 3 P
HYD 3 R
FCL 1 FWD TO FREON PUMP
FES H2O LINE A
FCL 1 TO HYD HX
FCL 1 TO RADIATORS
FCL 1 TO GSE HX
FCL 1 TO HYD HX
FCL 1 TO GSE HX
FCL 1 RAD TO HX
FCL 1
FCL 2
GSE HX
HYD SYS 1
HYD SYS 2
HYD SYS 3
HYD HX
FCL 1
FCL 2
FCL 1
FCL 2
FCL 1
FCL 2

DATE: 08/18/90 | NAME: MAG | VERSION: INK 5

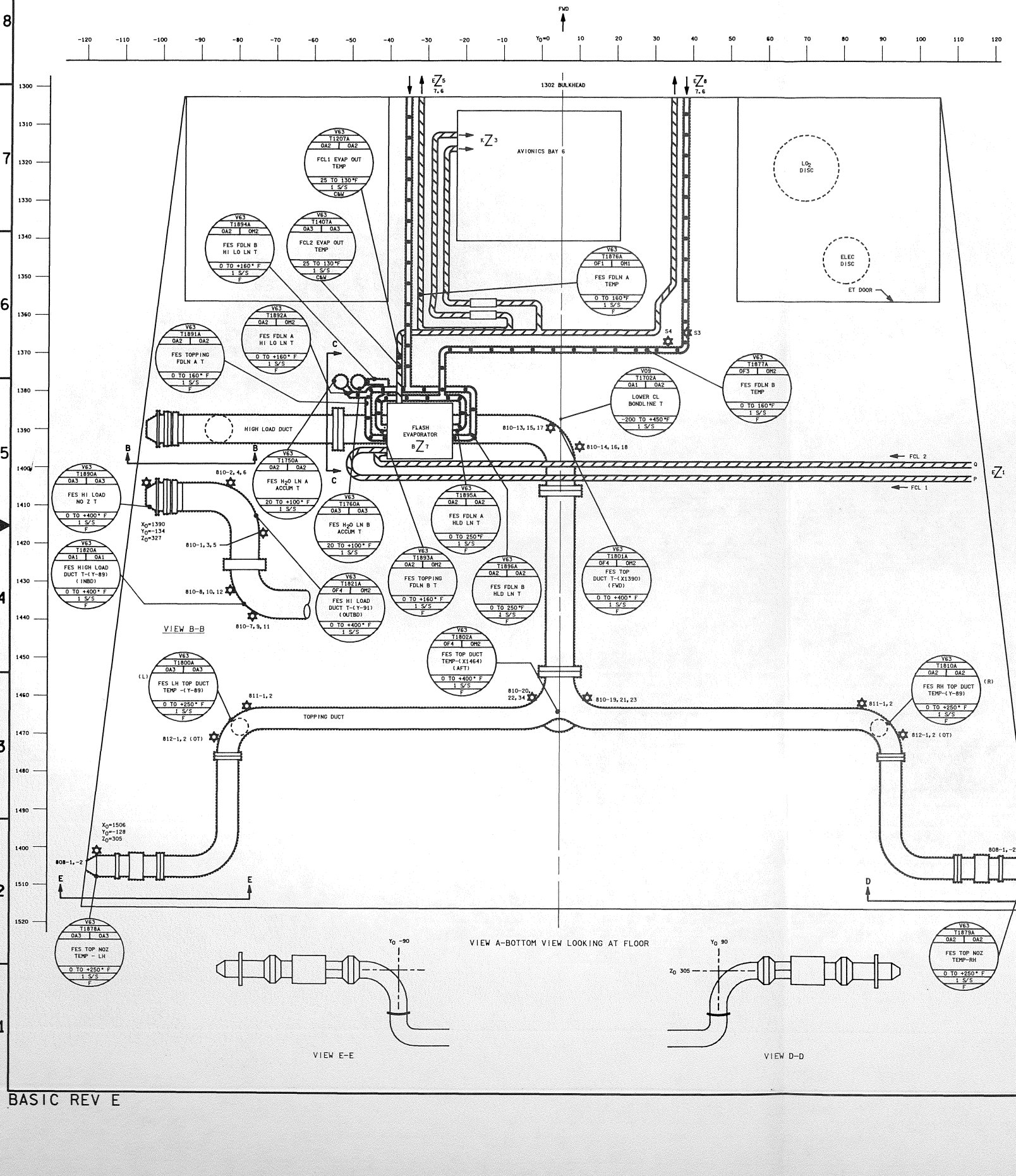

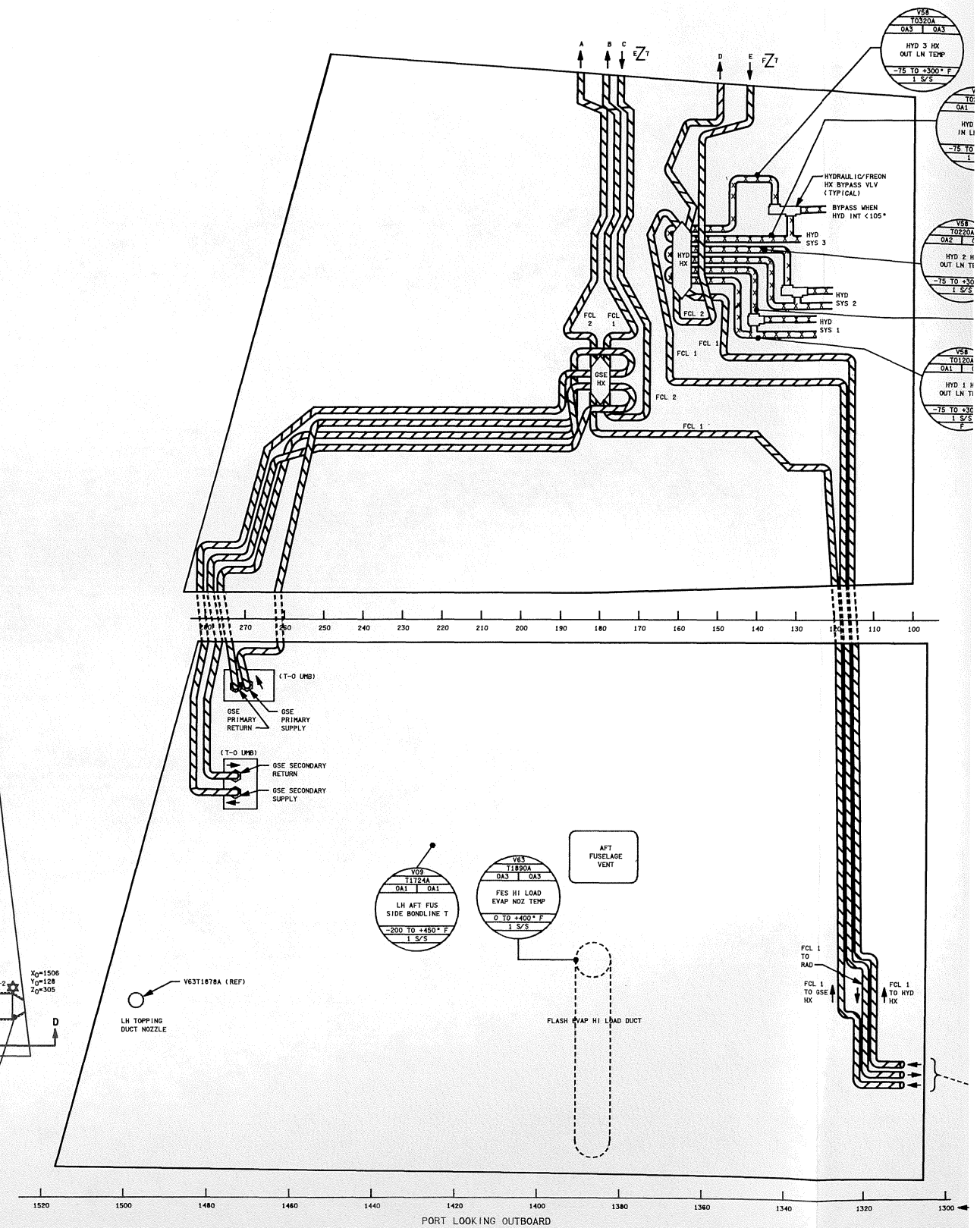

BASIC REV E

DATE= 7/27/87	NAME= MAG	VERSION= INK= 2
DATE= 8/5/87	NAME= BJT	VERSION= INK= 3
DATE= 8/18/90	NAME= VSH	VERSION= INK= 4

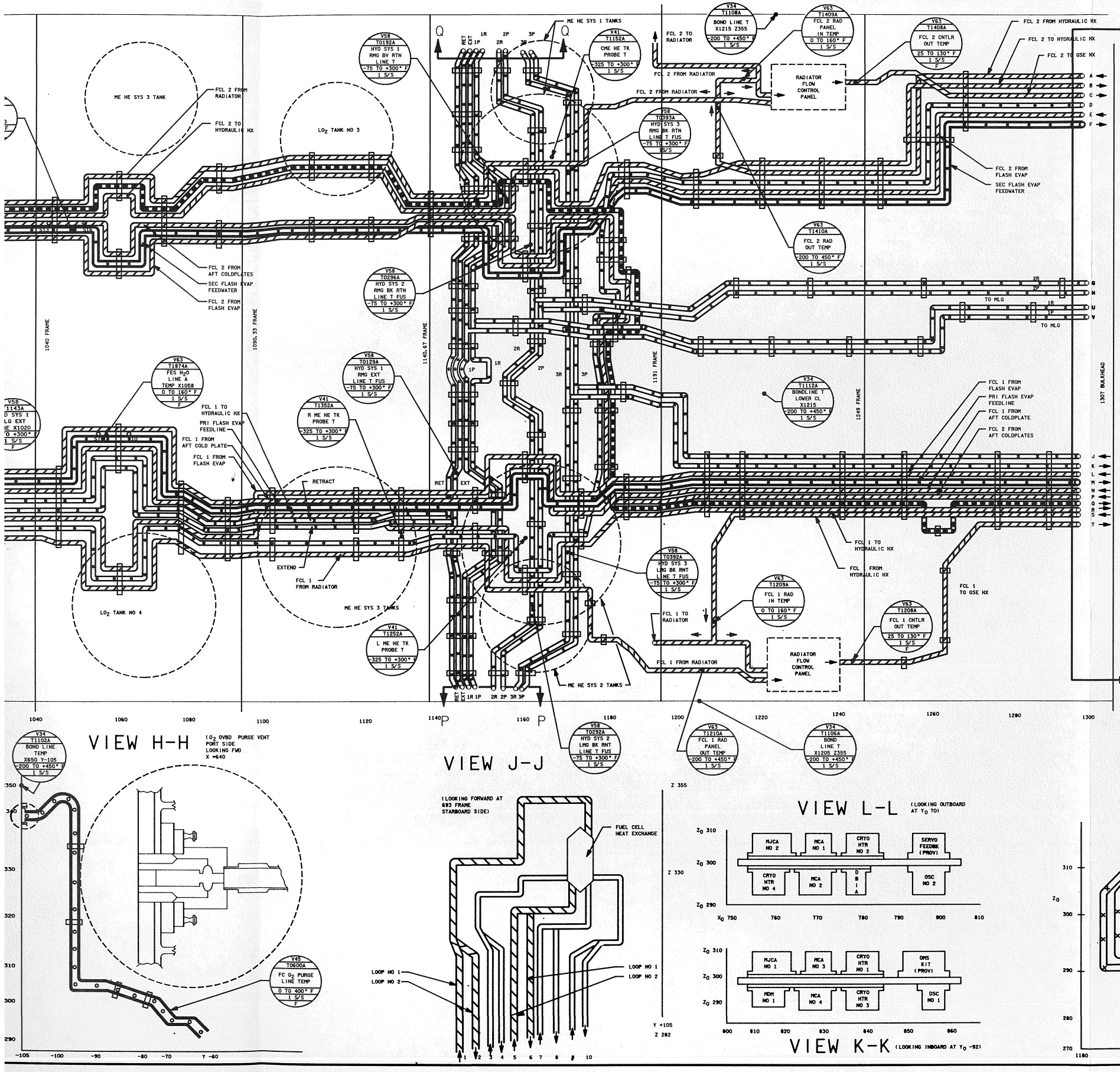

VIEW R-R
(FORWARD SIDE OF 1307 BULKHEAD LOOKING AFT)

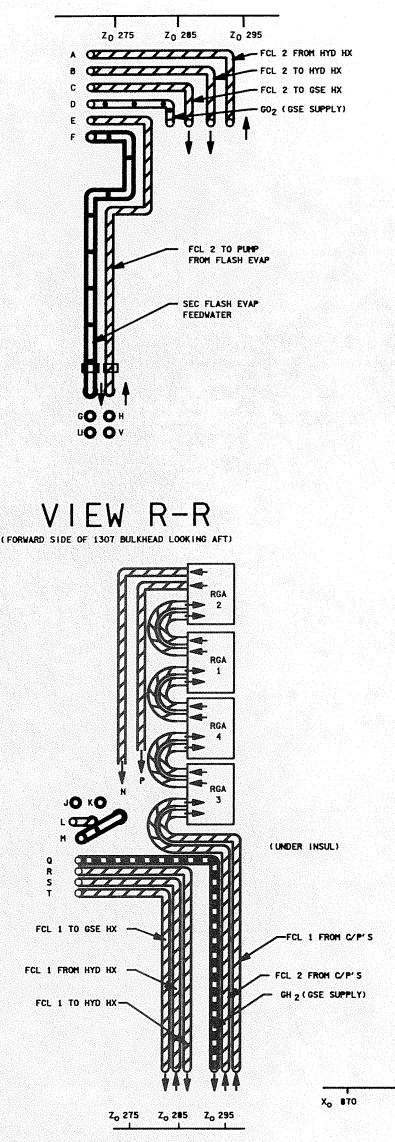

VIEW M-M
PORT SIDE LOOKING OUTBOARD AT Y_O -95

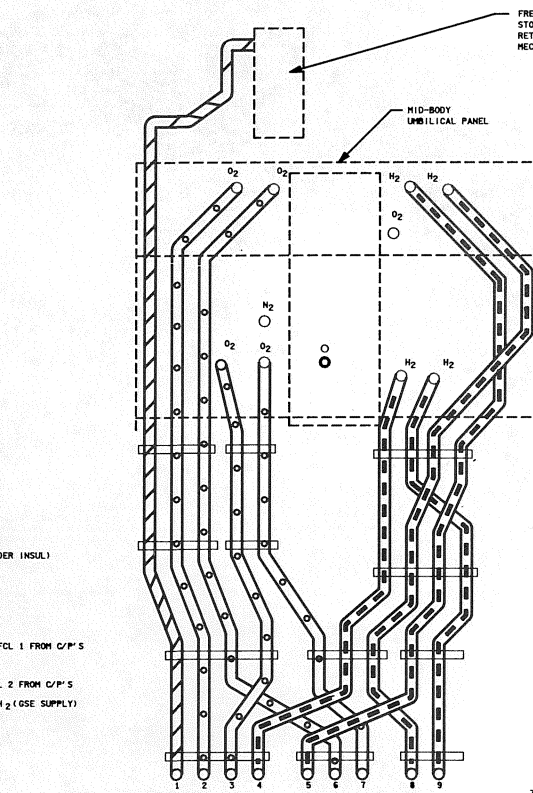

VIEW N-N
STBD SIDE (LOOKING OUTBD)

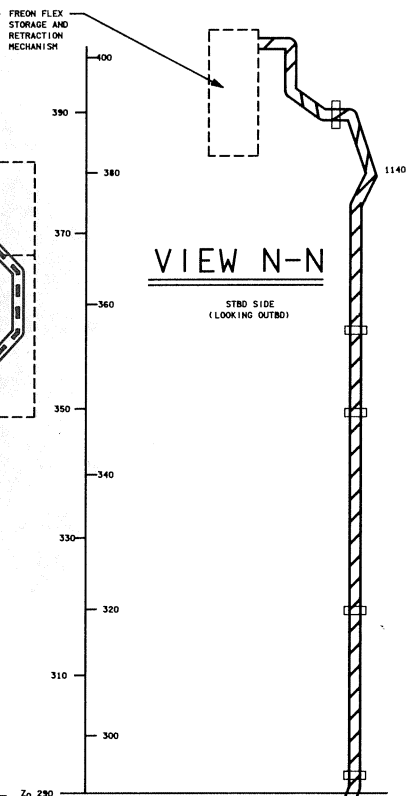

VIEW H-H
(O_2 OVBD PURGE VENT PORT SIDE LOOKING FWD X =640

VIEW J-J
(LOOKING FORWARD AT 693 FRAME STARBOARD SIDE)

VIEW L-L
(LOOKING OUTBOARD AT Y_O TO)

VIEW K-K
(LOOKING INBOARD AT Y_O -92)

VIEW P-P
PORT SIDE LOOKING OUTBOARD (TO/FROM LEFTMAIN LANDING GEAR UPLOCK ACT AND BRK VLVS)

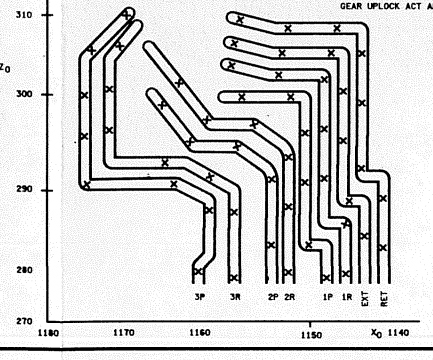

VIEW Q-Q
STBD SIDE LOOKING OUTBOARD (TO/FROM RIGHT MAIN LANDING GEAR UPLOCK ACT AND BRK VLVS)

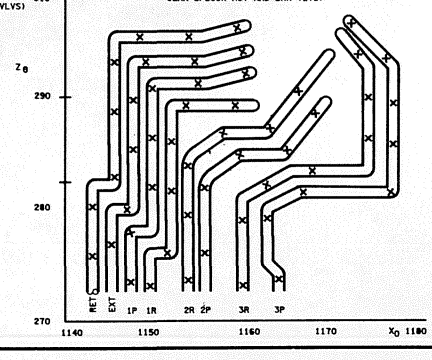

NOTES
1. PIPING LEGEND
   - HEATER AND INSULATED THERMOSTAT (TYP)
   - FREON
   - H_2O
   - H_2/H_2O
   - H_2
   - O_2
   - FC 40
   - WASTE WATER
   - HYDRAULIC
2. HEATER LEGEND
3. HEATER WATTAGES ARE BASED ON 28.0 VDC
4. TUBE ROUTING APPROXIMATE
5. MAY BE FREON OR H_2O DEPENDING ON VEHICLE

*6 TCS MFI

SIGNATURE		DATE	NATIONAL AERONAUTICS AND SPACE ADMINISTRATION LYNDON B. JOHNSON SPACE CENTER HOUSTON, TEXAS
DSGN	VIC ORTIZ	6-6-83	
DR			TCS=INSTRUMENTATION MID FUSELAGE
ENGR	L. RICHE	8/17/90	
ENGR			
APP			
APP			SPACE SHUTTLE / DMC NO 7.6
OMNIPLAN		8-17-90	ALL
LTR E	PCN		126.5 X 34 / PAGE / SHEET 1 OF 1

BASIC REV E

VIEW H-H

VIEW G-G

VIEW F-F

VIEW E-E

VIEW D-D

VIEW C-C

VIEW

HEATER

LOOP NO 1 PUMP

LOOP NO 2 PUMP

LOOP NO 1 SENSOR

LOOP NO 2 SENSOR

LOOP NO 1 FLOW PROPORTIONING VLV

LOOP NO 2 FLOW PROPORTIONING VLV

LOOP NO 1 INTERCHANGER

LOOP NO 2 INTERCHANGER

PAYLOAD HEAT EXCHANGER

LOOP NO 1 FROM FLASH EVAPORATOR

LOOP NO 2 FROM FLASH EVAPORATOR

(LOOKING AFT AT 636 FRAME PORT SIDE)

FROM P/C NO 1

FROM P/C NO 2

FROM P/C NO 3

TO CM

FUEL CELL H2O RELIEF VLV PNL

(BEHIND PANEL)

(LOOKING OUTBD ON PORT SIDE POTABLE AND WASTE WATER DUMP AND VACUUM VENT)

POTABLE H2O DUMP LINE

WASTE H2O DUMP LINE

VACUUM VENT LINE

DUMP VALVES

VACUUM VENT NOZZLE TEMP

(LOOKING FWD AT X -610)

VACUUM VENT LINE

VAC VENT

WASTE H2O DUMP NOZ

SUP H2O DUMP NOZ

LOOP SERVICE PANEL

TO/FROM COOLANT

SYS 1 N2 TANK 1

SYS 2 N2 TANK 2

O2 REGULATOR

ECS 401 INTERFACE

(SEC)

FROM RADIATOR

FCL 2 FROM RADIATOR

FCL 2 CWG IN

FCL 2 CWG OUT

FCL 1 MCA/A NO 2 MCA

FCL 1 CWG IN

FCL 2 MCA OUT

FCL 2 FROM FLASH EVAP

FCL 2 FROM AFT COLDPLATES

SEC FLASH EVAP FEEDWATER

FCL 2 TO HYD HX

FCL 1 FROM FLASH EVAP

FCL 1 FROM AFT COLDPLATES

PRI FLASH EVA FEEDLINE

FCL 1 FROM COLDPLATES

FCL 1 TO HYDRAULIC HX

PRI FLASH EVAP FEEDLINE

FCL 1 FROM AFT COLD PLATE

FCL 1 FROM FLASH EVAP

HYDRAULIC HX

FCL 2 TO HYDRAULIC HX

FCL 2 FROM RADIATOR

ME NE SYS 3 TANK

LH2 TANK NO 1

LH2 TANK NO 2

LH2 TANK NO 3

LH2 TANK NO 4

LO2 TANK NO 1

LO2 TANK NO 2

LO2 TANK NO 3

LO2 TANK NO 4

H2 VALVE PANEL 1

H2 VALVE PANEL 2

O2 VALVE PANEL 1

O2 VALVE PANEL 2

H2 PRESS RELIEF VENT

O2 PRESS RELIEF VENT

H2 PRESS RELIEF PANEL 2

O2 PRESS RELIEF PANEL 2

SYS 1 N2 TANK 1

SYS 2 N2 TANK 2

SYS 2 N2 QUAD TANK 1

EMERG O2 TANK TEMP

EMERG O2 TANK 2

SUPPLY LN

VENT LN

FILL LN

RETRACT

EXTEND

HYDRAULIC HX

(MID 1)

(MID 2)

(FWD)

(AFT)

(BEHIND PANEL)

(SEC)

(MISSION KIT)

1040 FRAME

1080.33 FRAME

9754.5 FRAME

803 FRAME

807 FRAME

810 FRAME

813 FRAME

636 FRAME

639 FRAME

N

P

Q

R

S

T

J

K

L

M

DATE: 8/18/90 | NAME: VSH | VERSION: INK4

BASIC REV E

VIEW A-A
(LOOKING FORWARD AT 576 BULKHEAD AND 582 FRAME)

VIEW B-B
FUEL CELL-STBD SIDE

FUEL CELL-PORT SIDE

FUEL CELL-END VIEW

VIEW C-C
(LOOKING FWD AT X =610)

VIEW D-D
(LOOKING OUTBD ON PORT SIDE POTABLE AND WASTE WATER DUMP AND VACUUM VENT)

VIEW E-E
(LOOKING AFT AT 636 FRAME STARBOARD SIDE)

VIEW
(LOOKING AFT AT 63

DATE: 05/25/90	NAME: BJT	VERSION: BPT$_2$ 8
DATE: 07/26/90	NAME: LAM	VERSION: BPT$_2$ 9
DATE: 08/18/90	NAME: MAG	VERSION: INR$_2$ 1

TYPICAL TILE

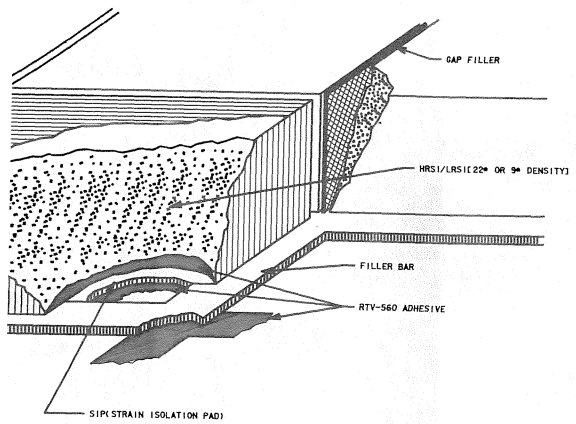

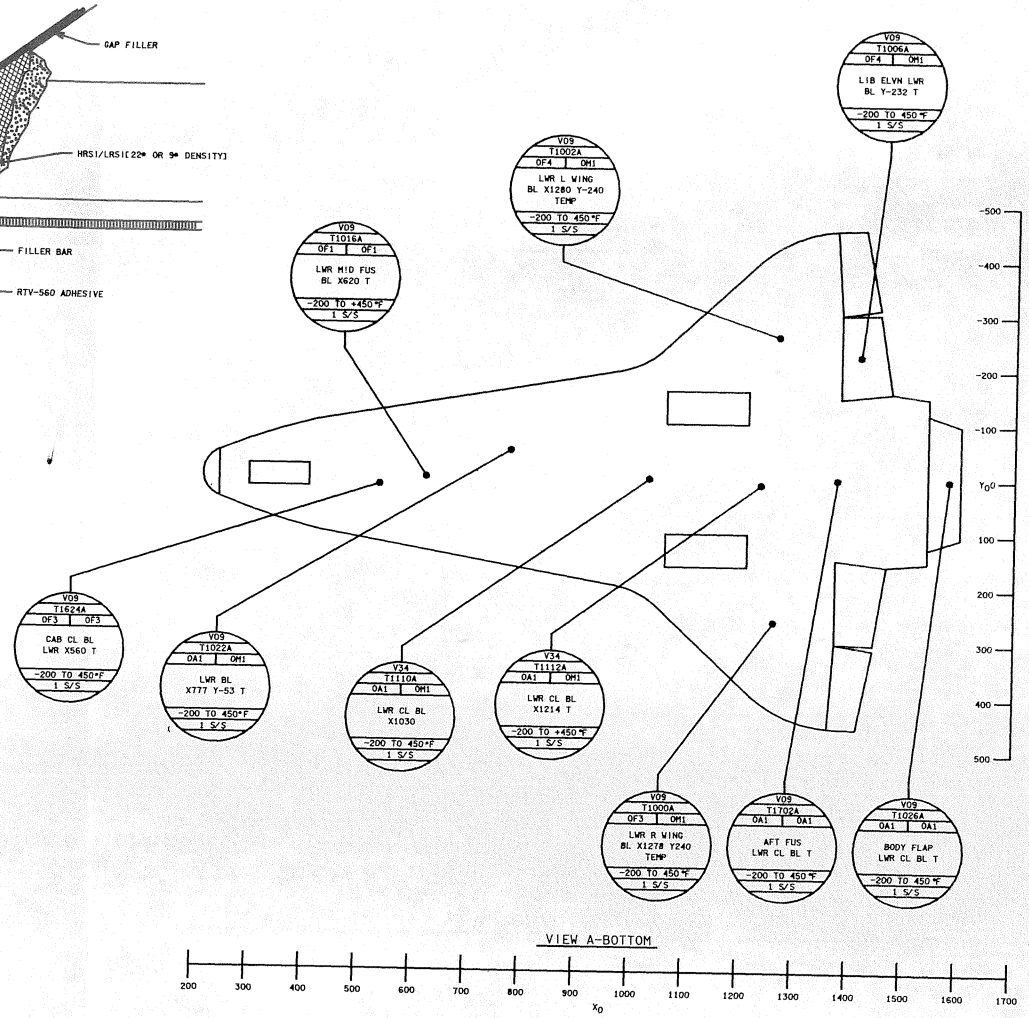

VIEW A-BOTTOM

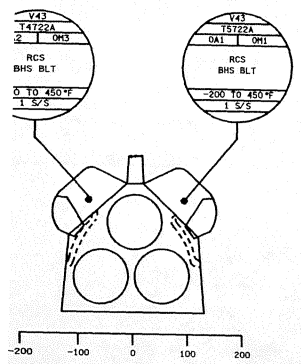

VIEW F-BASE HEAT SHIELD

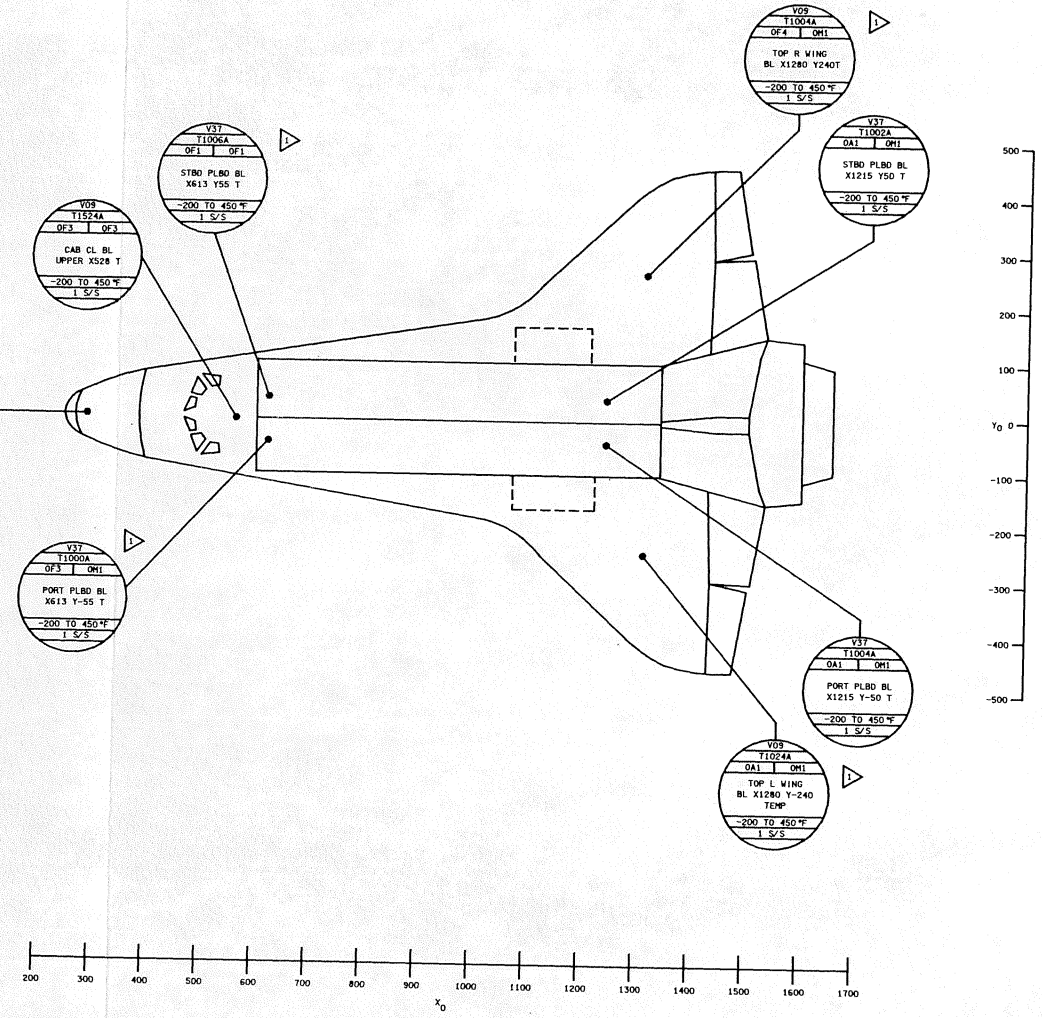

2. FOR VENDOR DRAWING REFERENCES SEE TABLE 7-I

NOTES: 1 NOT ON OV102

7 TPS INST

SIGNATURE		DATE	NATIONAL AERONAUTICS AND SPACE ADMINISTRATION LYNDON B. JOHNSON SPACE CENTER HOUSTON, TEXAS
DSGN JAMES BLANCHARD		8-9-82	
DR			TPS/STRUCTURE INSTRUMENTATION
ENGR J. M. SOLOMON		8/17/90	
ENGR		8/16/90	
APP		8/16/90	
APP			SPACE SHUTTLE / DWG NO 7.7
OMNIPLAN S.A. Gabriel		8-17-90	ALL
LTR E	PCN		126.5 X 34 / PAGE / SHEET 1 OF 1

BASIC REV E

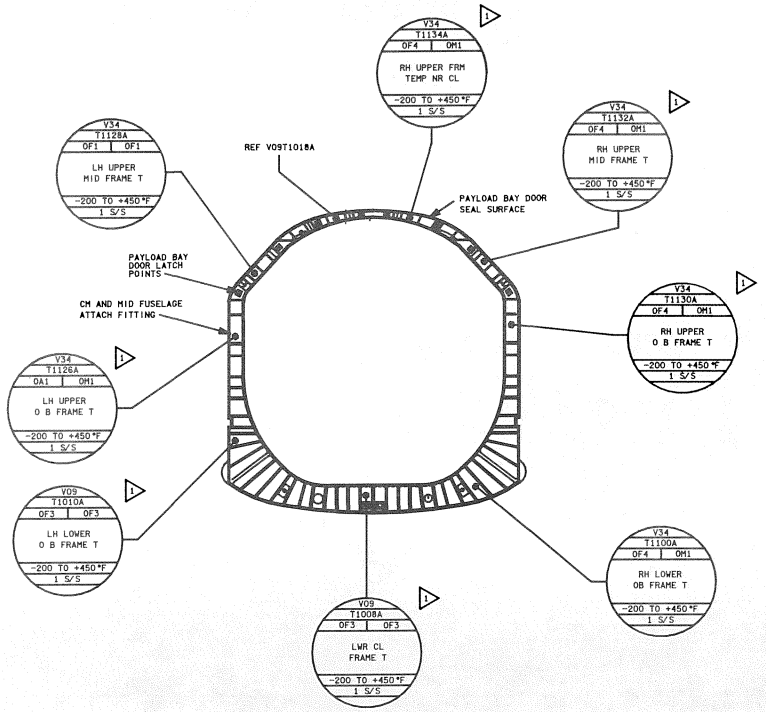

FRAME 582 LOOKING FORWARD SECTION J-J

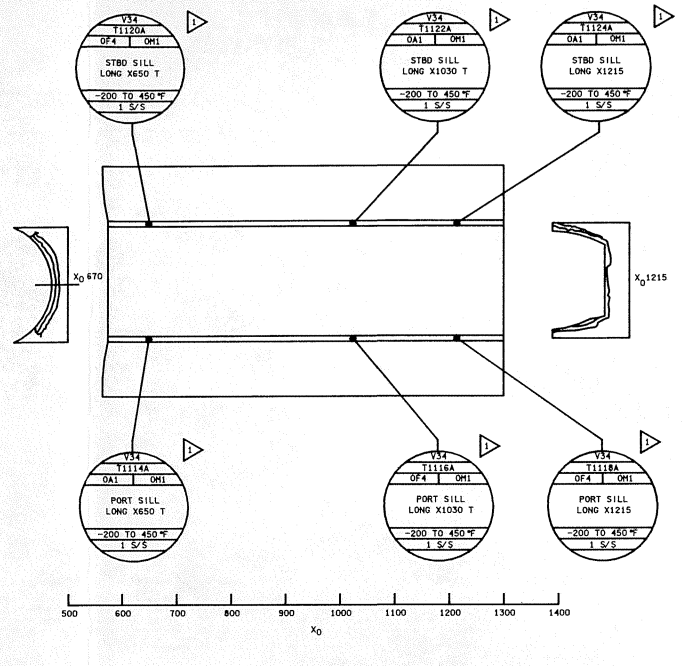

VIEW D-LOOKING DOWN INTO PAYLOAD BAY, DOORS OPEN

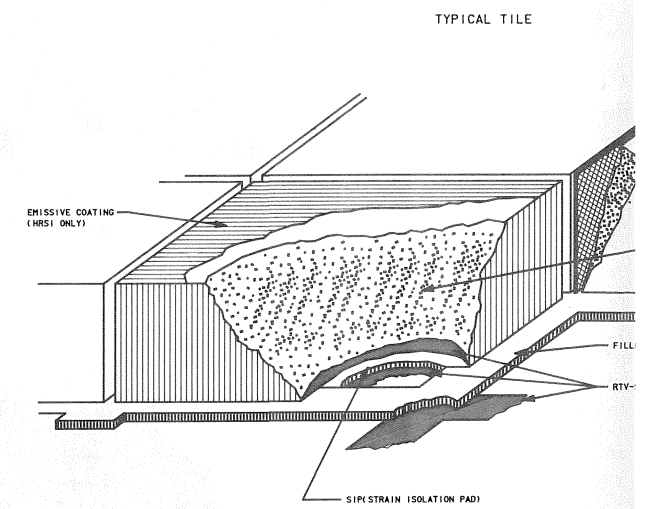

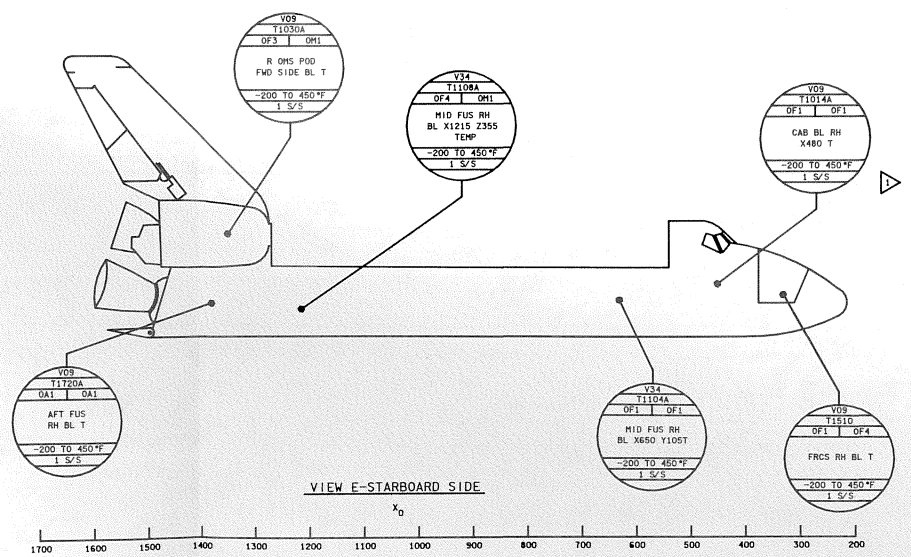

VIEW E-STARBOARD SIDE

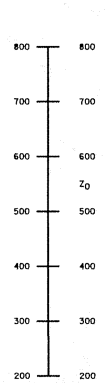

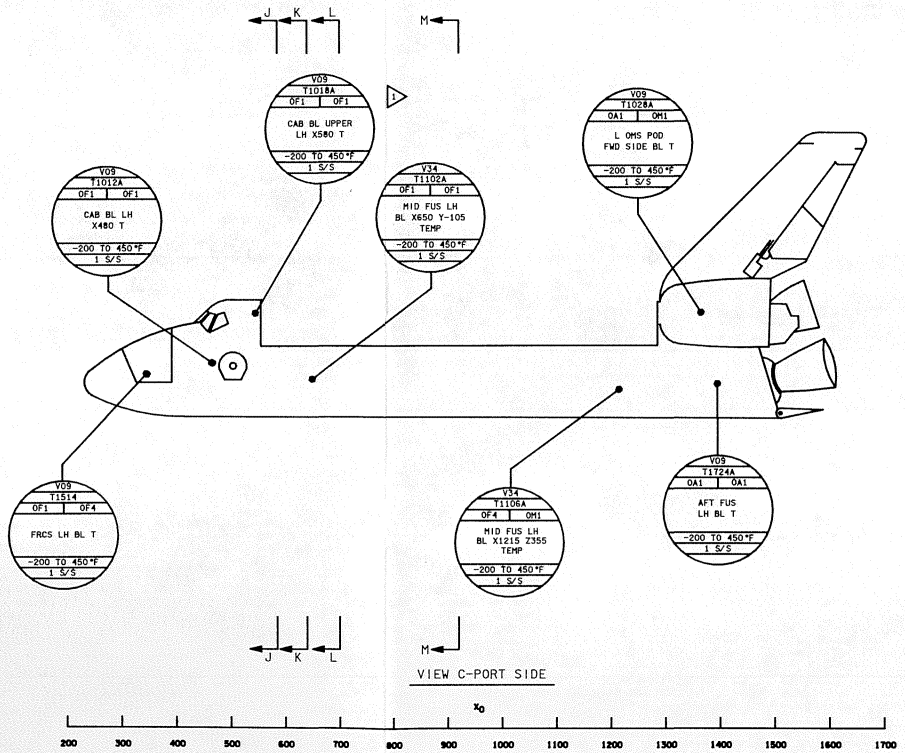

VIEW C-PORT SIDE

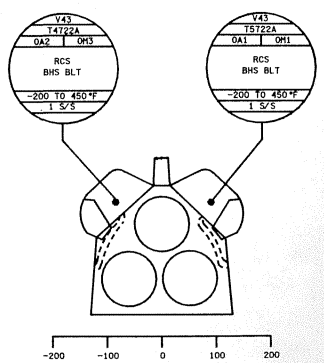

VIEW F-BASE HEAT SHIELD

DATE: 08/18/90 | NAME: MAG | VERSION: INK.1

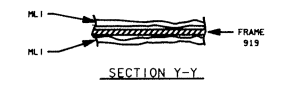

SECTION Y-Y

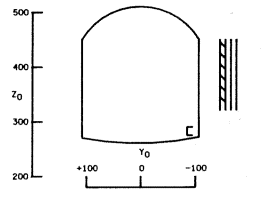

VIEW N-1307 BLKHD LOOKING AFT

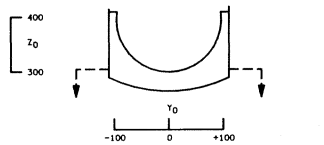

SECTION M-M 919 FRAME LOOKING FWD

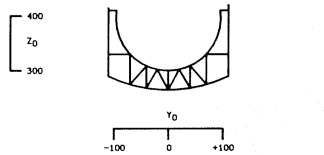

SECTION L-L 693 FRAME LOOKING FWD

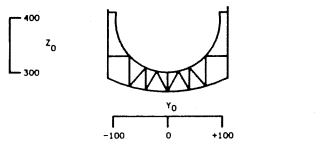

SECTION K-K 636 FRAME LOOKING FWD

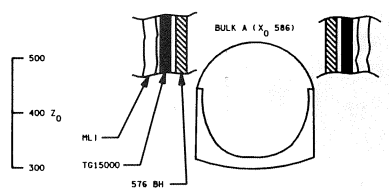

SECTION J-J X_0 582 LOOKING FORWARD

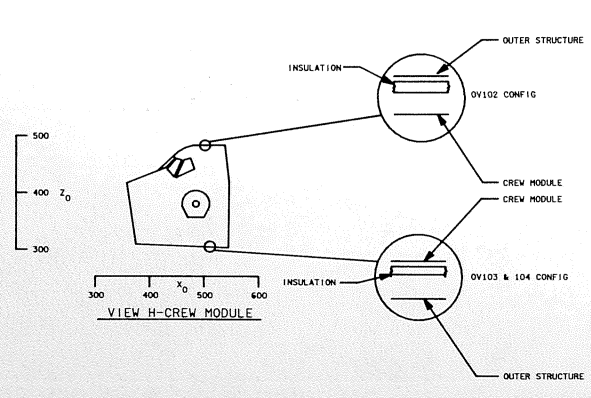

VIEW H-CREW MODULE

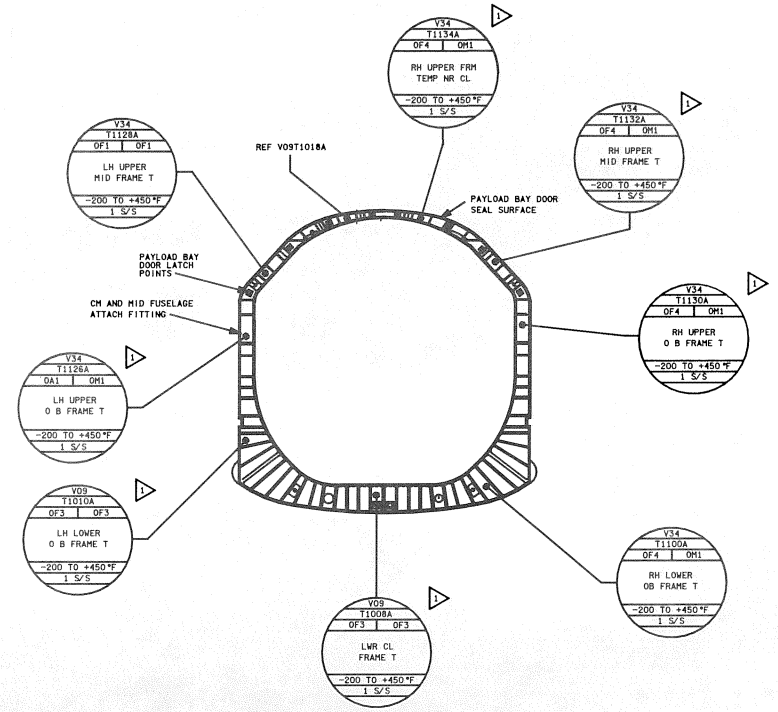

FRAME 582 LOOKING FORWARD SECTION J-J

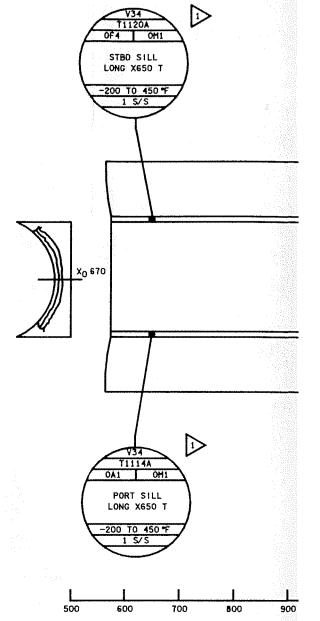

VIEW D-LOOKING DOWN IN

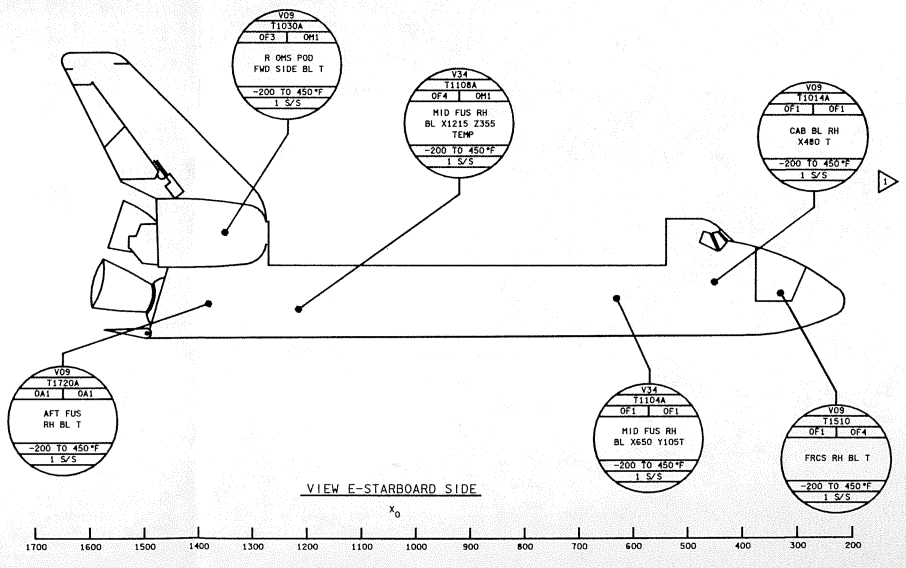

VIEW E-STARBOARD SIDE

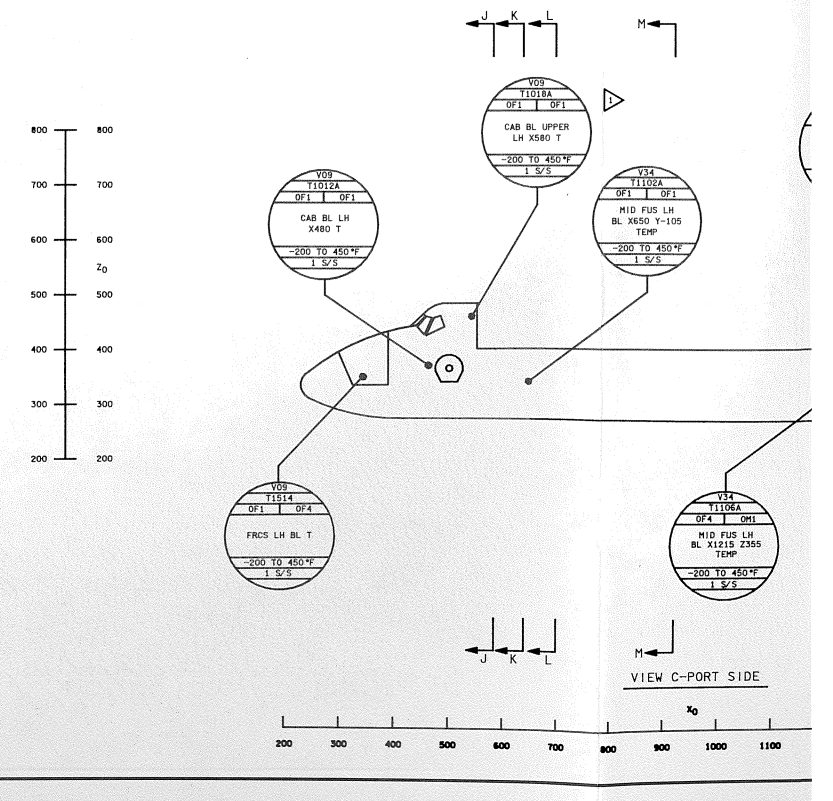

VIEW C-PORT SIDE

BASIC REV E

DATE= 7/18/89	NAME= JMB	VERSION= INK.2
DATE= 7/21/89	NAME= SEW	VERSION= INK.3
DATE= 8/17/90	NAME= YSH	VERSION= INK.4

NOTE

RCC - REINFORCED CARBON-CARBON
0.63 cm (0.25 IN.) TO 1.27 cm (0.5 IN.) *
HRSI - HIGH-TEMPERATURE REUSABLE SURFACE INSULATION
1.27 cm (0.5 IN.) TO 12.7 cm (85 IN.) *
LRSI - LOW-TEMPERATURE REUSABLE SURFACE INSULATION
0.51 cm (0.5 IN.) TO 6.98 cm (2.75 IN.) *
FRSI - NOMEX FELT REUSABLE SURFACE INSULATION
0.36 cm (0.144 IN.) TO 2.79 cm (1.1 IN.) *
AFRSI - ADVANCED FRSI (QUILTED) RSI

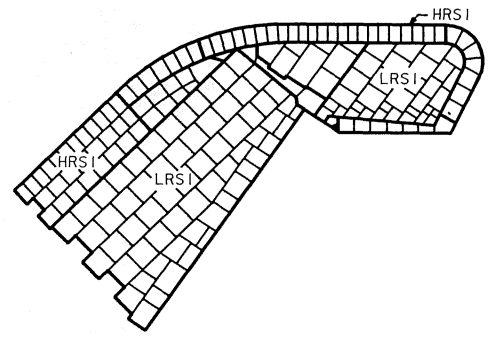

OV-102 VERTICAL STABILIZER

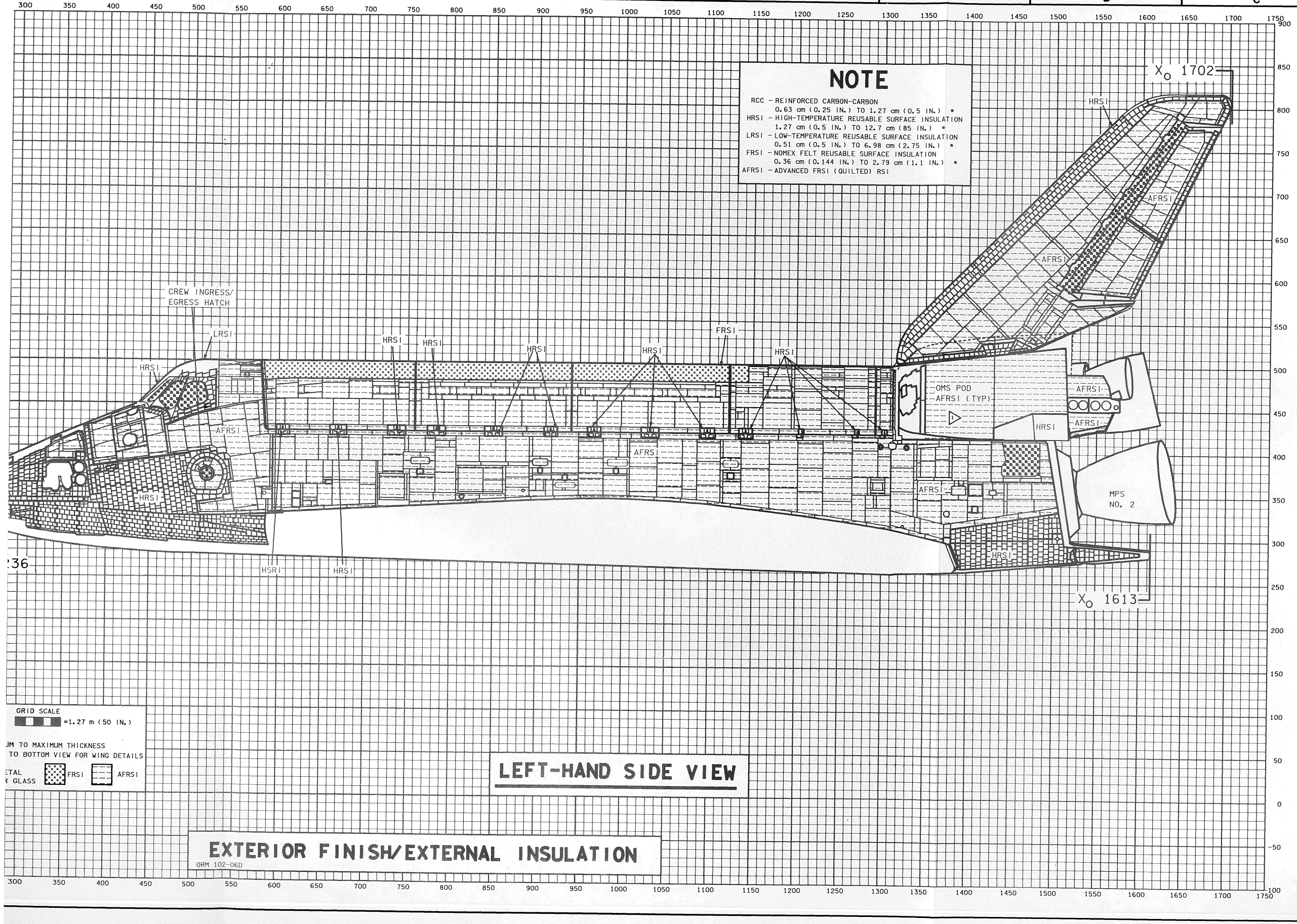
X_O 1702
X_O 1613
CREW INGRESS/
EGRESS HATCH
LRSI
HRSI
HRSI
HRSI
HRSI
HRSI
FRSI
HRSI
HRSI
AFRSI
AFRSI
AFRSI
OMS POD
AFRSI (TYP)
HRSI
AFRSI
AFRSI
MPS
NO. 2
HRSI
HRSI
HRSI
HRSI
HRSI

S R Q P O N M L K J I

1150 1100 1050 1000 950 900 850 800 750 700 650 600 550 500 450 400 350 300 250 200

900 850 800 750 700 650 600 550 500 450 400 350 300 250 200 150 100 50 0 −50 −100

5 IN.) *
INSULATION
IN.) *
INSULATION
5 IN.) *
ATION
.1 IN.) *

HRSI
FRSI
AFRSI
LRSI
RCC
X_o 236

*MINIMUM TO MAXIMUM THICKNESS
**REFER TO BOTTOM VIEW FOR WING DETAILS.
METAL OR GLASS
FRSI
AFRSI

RIGHT-HAND SIDE VIEW

EXTERNAL INSULATION

ORM-102-101

200 250 300 350 400 450 500 550 600 650

CREW INGRESS/
EGRESS HATCH

HRSI
LRSI
AFRSI
RCC
X_o 236

GRID SCALE
=1.27 m (50 IN.)
*MINIMUM TO MAXIMUM THICKNESS
**REFER TO BOTTOM VIEW FOR WING DETAILS
METAL OR GLASS
FRSI
AFRSI

EXTERIOR FIN

ORM 102-06D

DATE: 8/17/90 | NAME: VSH | VERSION: INK 4

NOTE

RCC - REINFORCED CARBON-CARBON
0.63 cm (0.25 IN.) TO 1.27 cm (0.5 IN.) *
HRSI - HIGH-TEMPERATURE REUSABLE SURFACE INSULATION
1.27 cm (0.5 IN.) TO 12.7 cm (85 IN.) *
LRSI - LOW-TEMPERATURE REUSABLE SURFACE INSULATION
0.51 cm (0.5 IN.) TO 6.98 cm (2.75 IN.) *
FRSI - NOMEX FELT REUSABLE SURFACE INSULATION
0.36 cm (0.144 IN.) TO 2.79 cm (1.1 IN.) *
AFRSI - ADVANCED FRSI (QUILTED) RSI

X_o 1702

X_o 1613

X_o 236

HRSI
AFRSI
OMS POD
AFRSI (TYP)
FRSI
LRSI
RCC

GRID SCALE
=1.27 m(50IN.)

*MINIMUM TO MAXIMUM THICKNESS
**REFER TO BOTTOM VIEW FOR WING DETAILS.
METAL OR GLASS | FRSI | AFRSI

RIGHT-HAND SIDE VIEW

EXTERIOR FINISH/EXTERNAL INSULATION

ORM-102-09D
ORM-102-101

BASIC REV E

M L K J I H G F E D C

NOTE

RCC - REINFORCED CARBON-CARBON
0.63 cm (0.25 IN.) TO 1.27 cm (0.5 IN.) *
HRSI - HIGH-TEMPERATURE REUSABLE SURFACE INSULATION
1.27 cm (0.5 IN.) TO 12.7 cm (85 IN.) *
LRSI - LOW-TEMPERATURE REUSABLE SURFACE INSULATION
0.51 cm (0.5 IN.) TO 6.98 cm (2.75 IN.) *
FRSI - NOMEX FELT REUSABLE SURFACE INSULATION
0.36 cm (0.144 IN.) TO 2.79 cm (1.1 IN.) *
AFRSI - ADVANCED FRSI (QUILTED) RSI

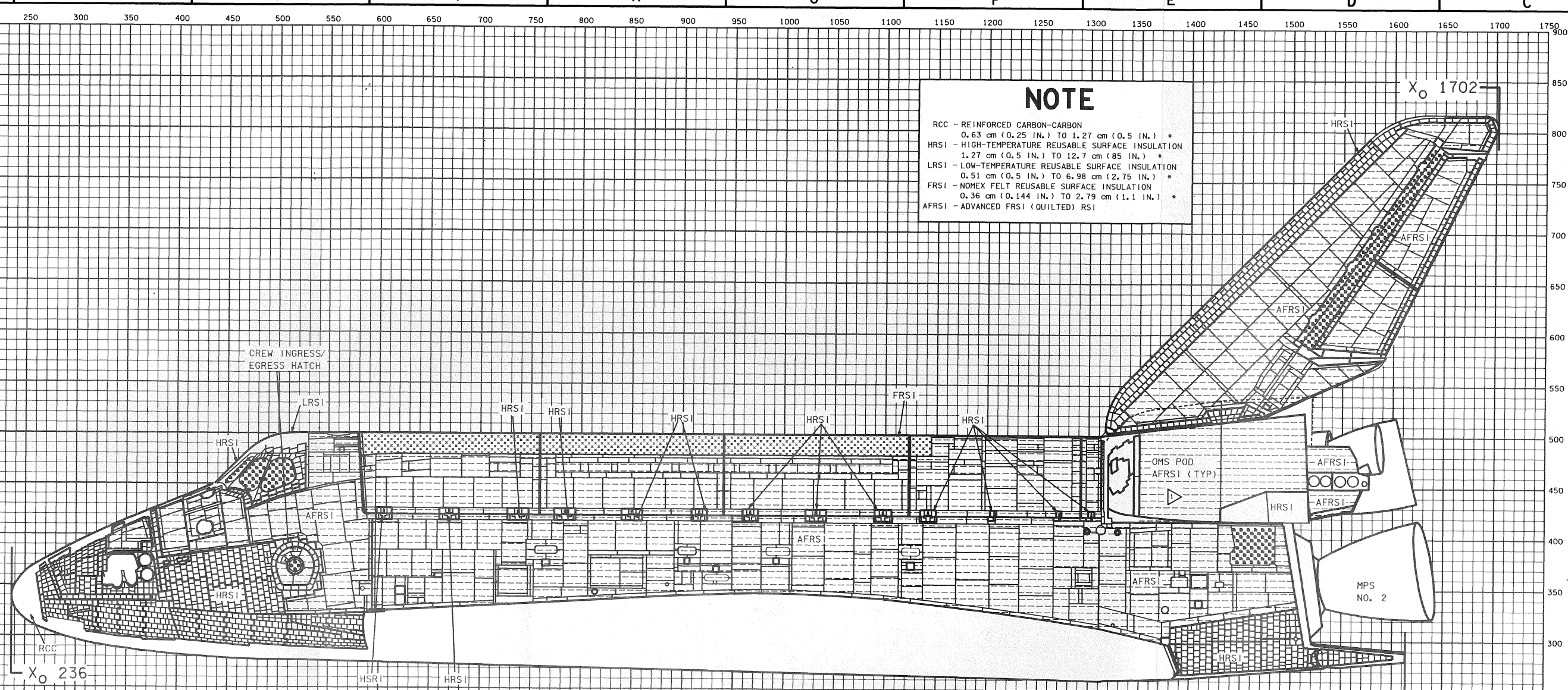

GRID SCALE
=1.27 m (50 IN.)

*MINIMUM TO MAXIMUM THICKNESS
**REFER TO BOTTOM VIEW FOR WING DETAILS

METAL OR GLASS | FRSI | AFRSI

LEFT-HAND SIDE VIEW

EXTERIOR FINISH/EXTERNAL INSULATION

ORM 102-06D

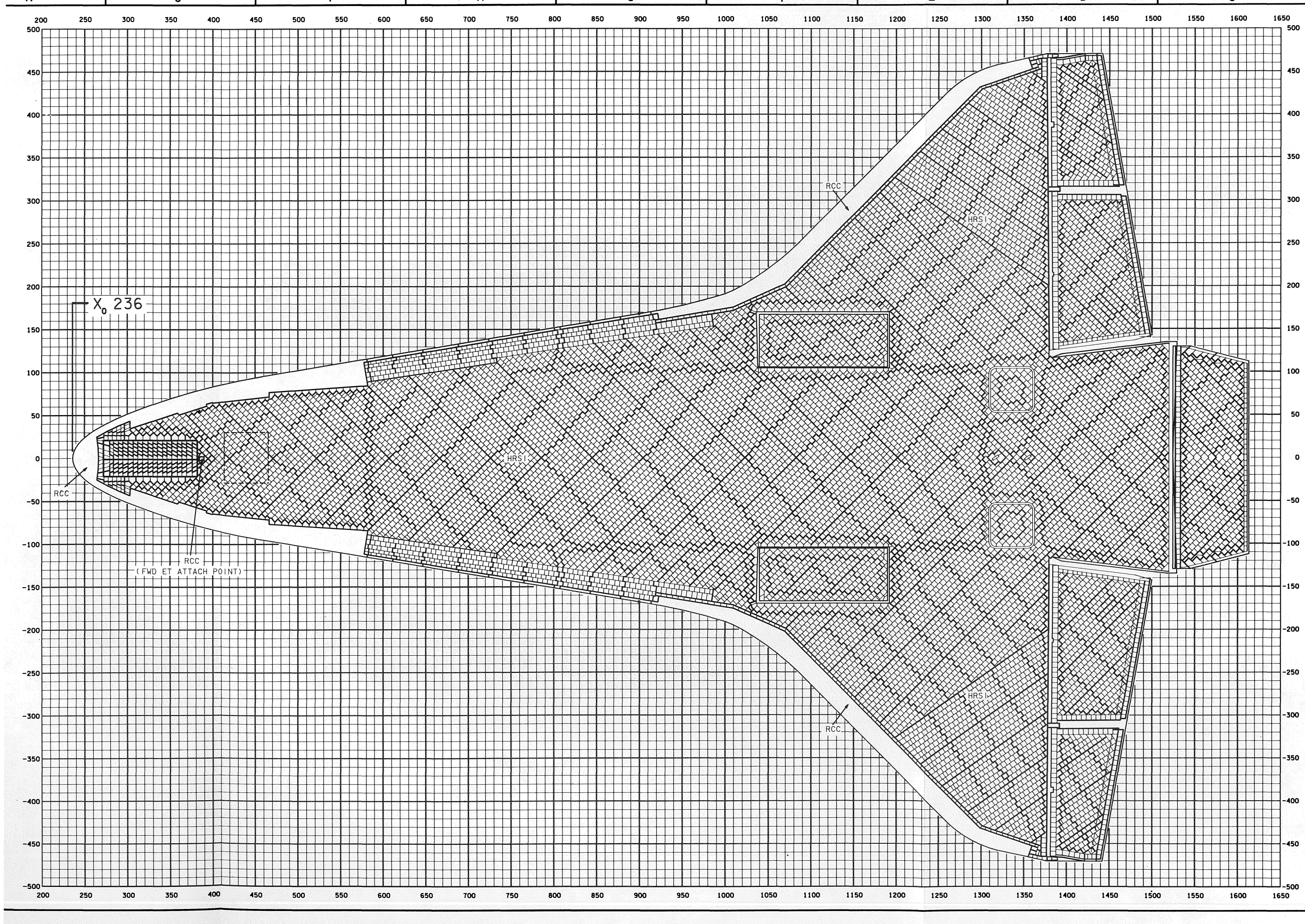

DATE: 11/16/88	NAME: BJT	VERSION: BPT; 5
DATE: 12/21/88	NAME: BCH	VERSION: BPT; 6
DATE: 8/18/90	NAME: VSH	VERSION: INK; 2

3. OV-103/104 TPS CONFIGURATION, OV-102 WILL BE MODIFIED TO THIS, EXCEPT FOR INSTRUMENTATION TILES

2. REFER TO TABLE 7-1 FOR DRAWING REFERENCES

NOTES: 1 SEE DWG 7.8 SHEET 3 FOR OMS POD TPS

*8 TOP/BOTTOM 2

SIGNATURE	DATE	NATIONAL AERONAUTICS AND SPACE ADMINISTRATION LYNDON B. JOHNSON SPACE CENTER HOUSTON, TEXAS
DSGN TOM LENERS	10/16/89	
DR THERESA WISONG		EXTERNAL VIEWS TOP/BOTTOM
ENGR V. HOWARD	8/17/90	
ENGR V. Howard	8/23/90	
APP Mark J. Haig	8/30/90	
APP		SPACE SHUTTLE ALL
OMNIPLAN S.K. Cintrelli	10-16-90	DWG NO 7.8
LTR E	PCN	126.5 X 34 PAGE SHEET 2 OF 4

BASIC REV E

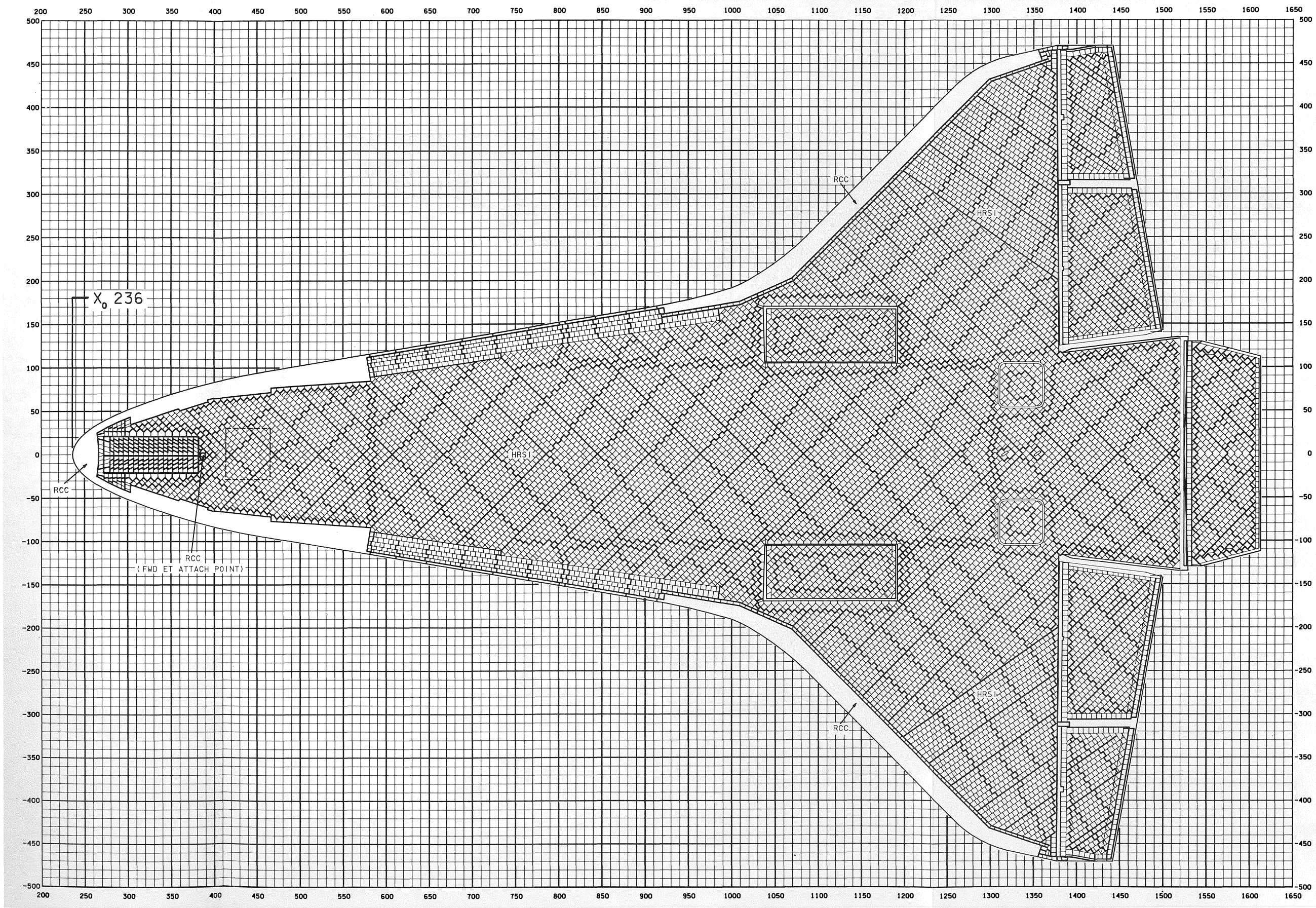

DATE: 11/16/88	NAME: BJT	VERSION: BPT, 5
DATE: 12/21/88	NAME: BCH	VERSION: BPT, 6
DATE: 8/18/90	NAME: VSH	VERSION: INK, 2

3. OV-103/104 TPS CONFIGURATION, OV-102 WILL BE MODIFIED TO THIS, EXCEPT FOR INSTRUMENTATION TILES

2. REFER TO TABLE 7-1 FOR DRAWING REFERENCES

NOTES: 1 SEE DWG 7.8 SHEET 3 FOR OMS POD TPS

*8 TOP/BOTTOM 2

SIGNATURE	DATE	NATIONAL AERONAUTICS AND SPACE ADMINISTRATION LYNDON B. JOHNSON SPACE CENTER HOUSTON, TEXAS
DSGN TOM LENERS	10/16/89	
DR THERESA WISONG		EXTERNAL VIEWS TOP/BOTTOM
ENGR V. HOWARD	8/17/90	
ENGR V. Howard	8/23/90	
APP Mark J. Craig	8/30/90	
APP		SPACE SHUTTLE ALL
OMNIPLAN S.K. Vinkelle	10-16-90	DWG NO 7.8
LTR E	PCN	126.5 X 34 PAGE SHEET 2 OF 4

BASIC REV E

S R Q P O N M L K J I

800 850 900 950 1000 1050 1100 1150 1200 1250 1300 1350 1400 1450 1500 1550 1600 1650 1700 1750 1800

500 450 400 350 300 250 200 150 100 50 0 -50 -100 -150 -200 -250 -300 -350 -400 -450 -500

HRSI
RCC
AFRSI
FRSI
TOP VIEW
X_o 1613
PLBD AFRSI (TYP)

TE
ON
) 1.27 cm (0.5 IN.)
ABLE SURFACE INSULATION
12.7 cm (5 IN.)
BLE SURFACE
6.98 cm (2.75 IN.)
URFACE INSULATION
TO 2.79 cm (1.1 IN.)
) RSI

EXTERNAL INSULATION
ORM 102-012C

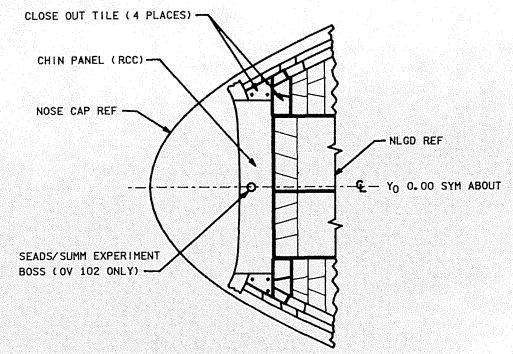

CHIN PANEL INSTALLATION (OV102-104 ONLY)

200 250 300 350 400 450 500 550

X_o 236
RCC
RCC (FWD ET ATTACH POINT)

DATE: 8/18/90 | NAME: VSH | VERSION: INK 2

TOP VIEW

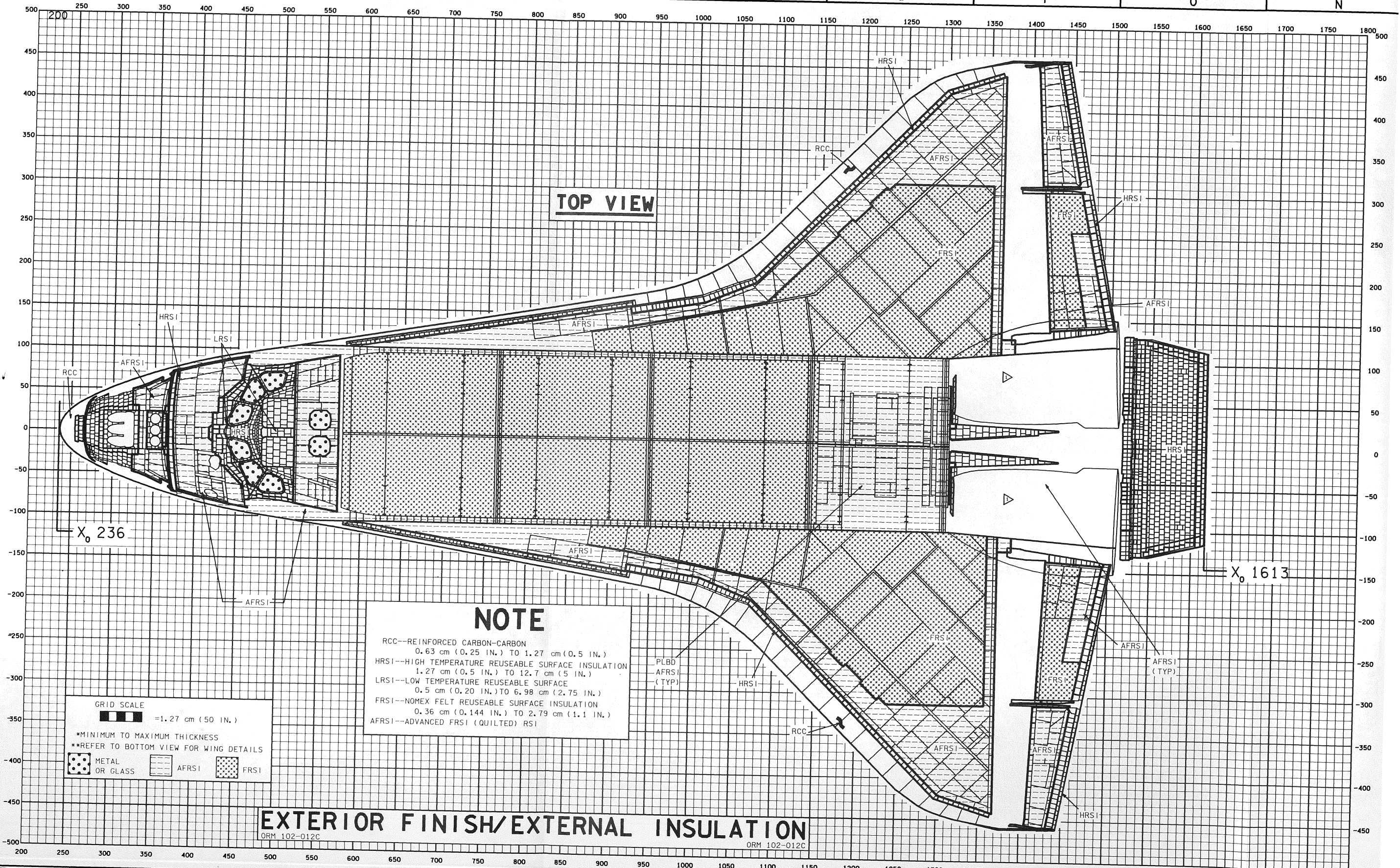

NOTE

RCC--REINFORCED CARBON-CARBON
0.63 cm (0.25 IN.) TO 1.27 cm (0.5 IN.)
HRSI--HIGH TEMPERATURE REUSEABLE SURFACE INSULATION
1.27 cm (0.5 IN.) TO 12.7 cm (5 IN.)
LRSI--LOW TEMPERATURE REUSEABLE SURFACE
0.5 cm (0.20 IN.) TO 6.98 cm (2.75 IN.)
FRSI--NOMEX FELT REUSEABLE SURFACE INSULATION
0.36 cm (0.144 IN.) TO 2.79 cm (1.1 IN.)
AFRSI--ADVANCED FRSI (QUILTED) RSI

GRID SCALE =1.27 cm (50 IN.)
*MINIMUM TO MAXIMUM THICKNESS
**REFER TO BOTTOM VIEW FOR WING DETAILS
METAL OR GLASS | AFRSI | FRSI

EXTERIOR FINISH/EXTERNAL INSULATION

ORM 102-012C

ORM 102-012C

BASIC REV E

DATE: 09/12/90

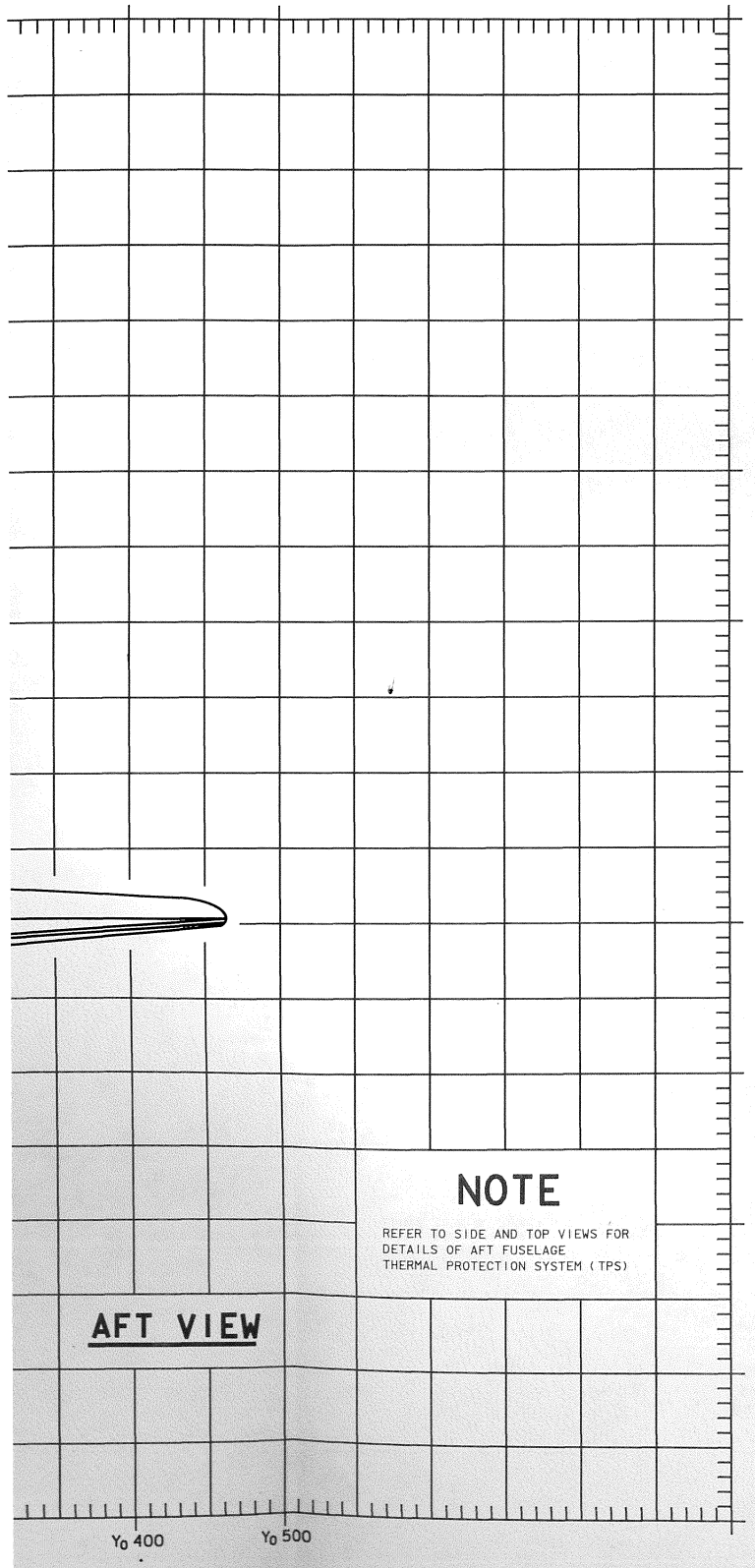

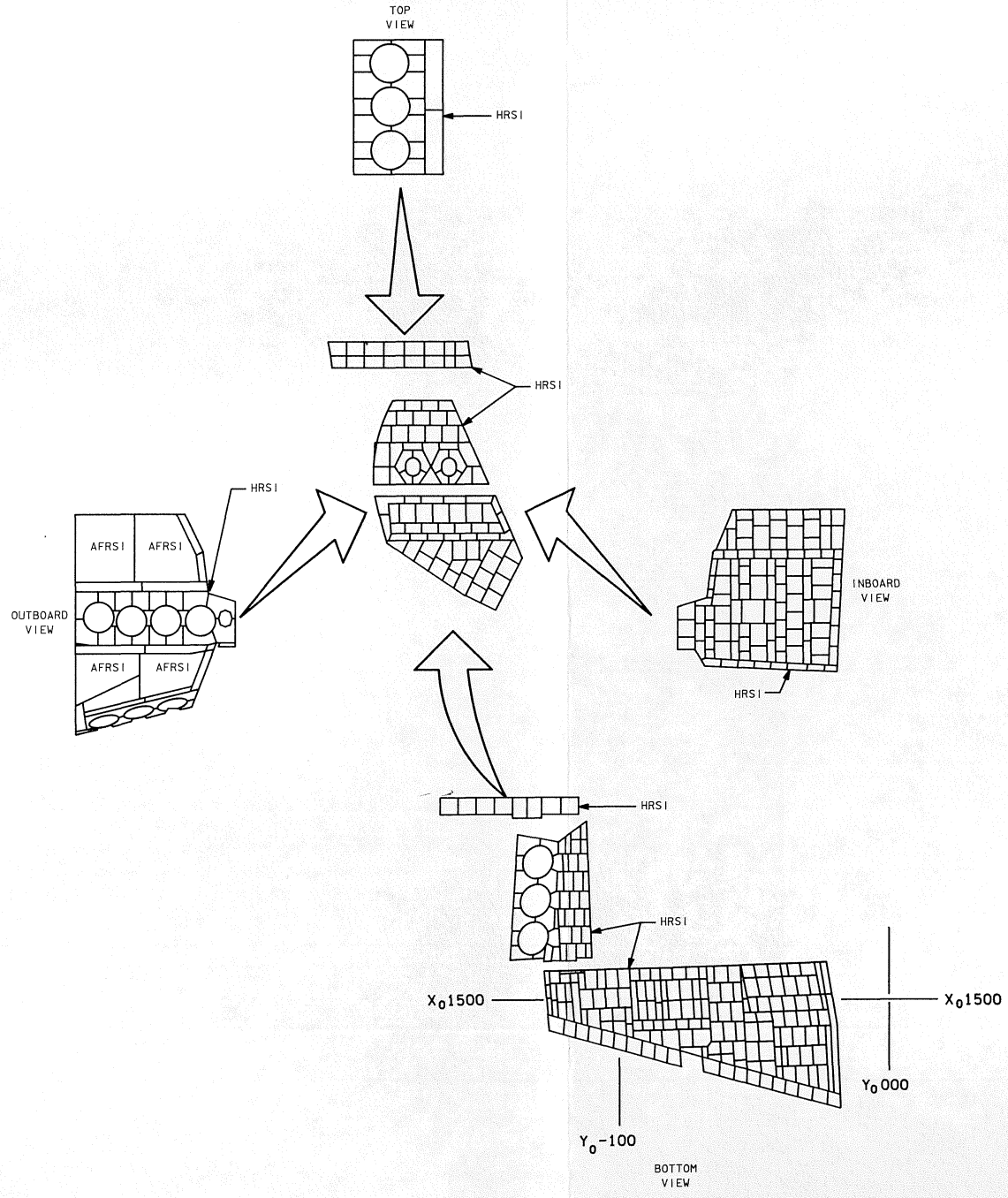

LH POD AFT RCS HOUSING

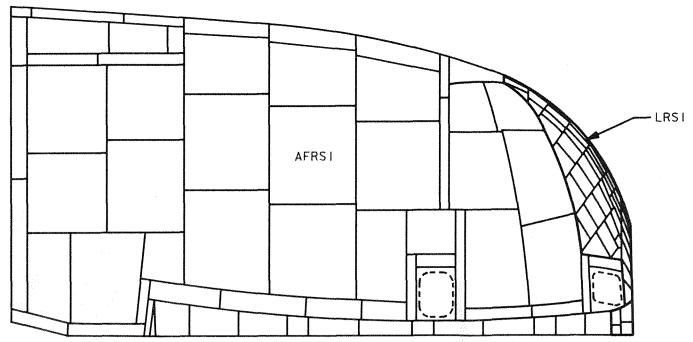

LH OMS POD "INBOARD"

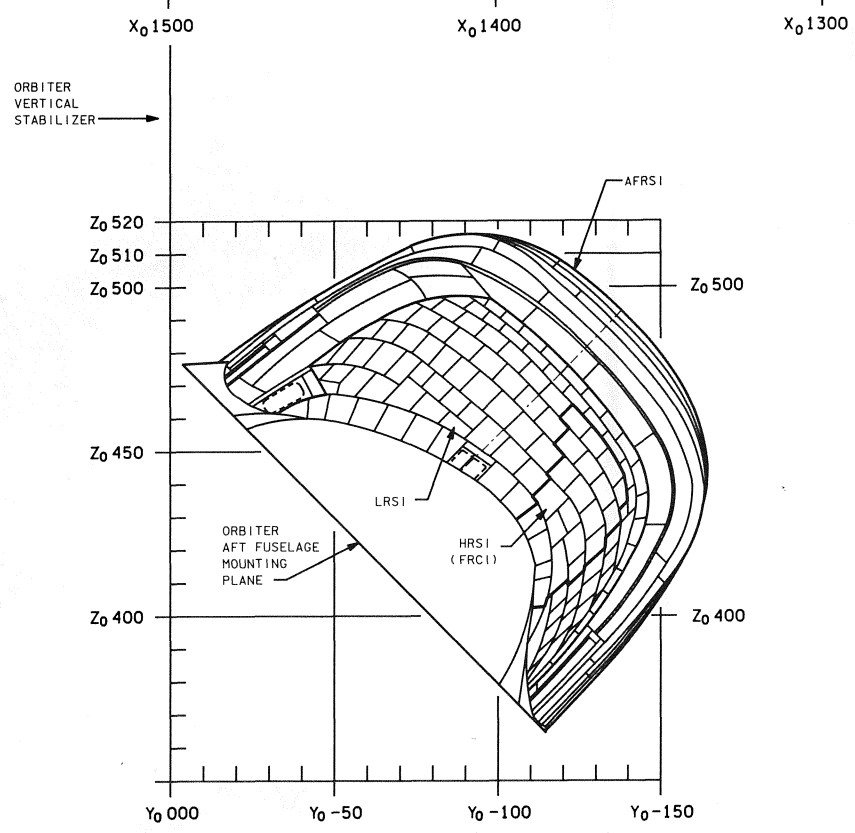

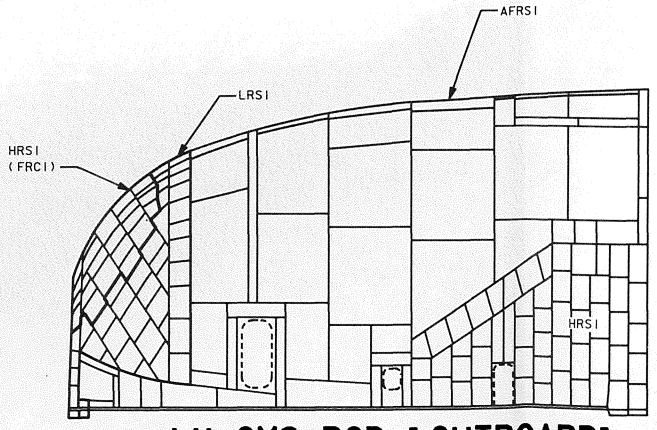

LH OMS POD "OUTBOARD"

DATE: 08/06/87	NAME: BJT	VERSION: INK,1
DATE: 08/25/90	NAME: SEW	VERSION: BPT,2
DATE: 09/12/90	NAME: MAG	VERSION: INK,2

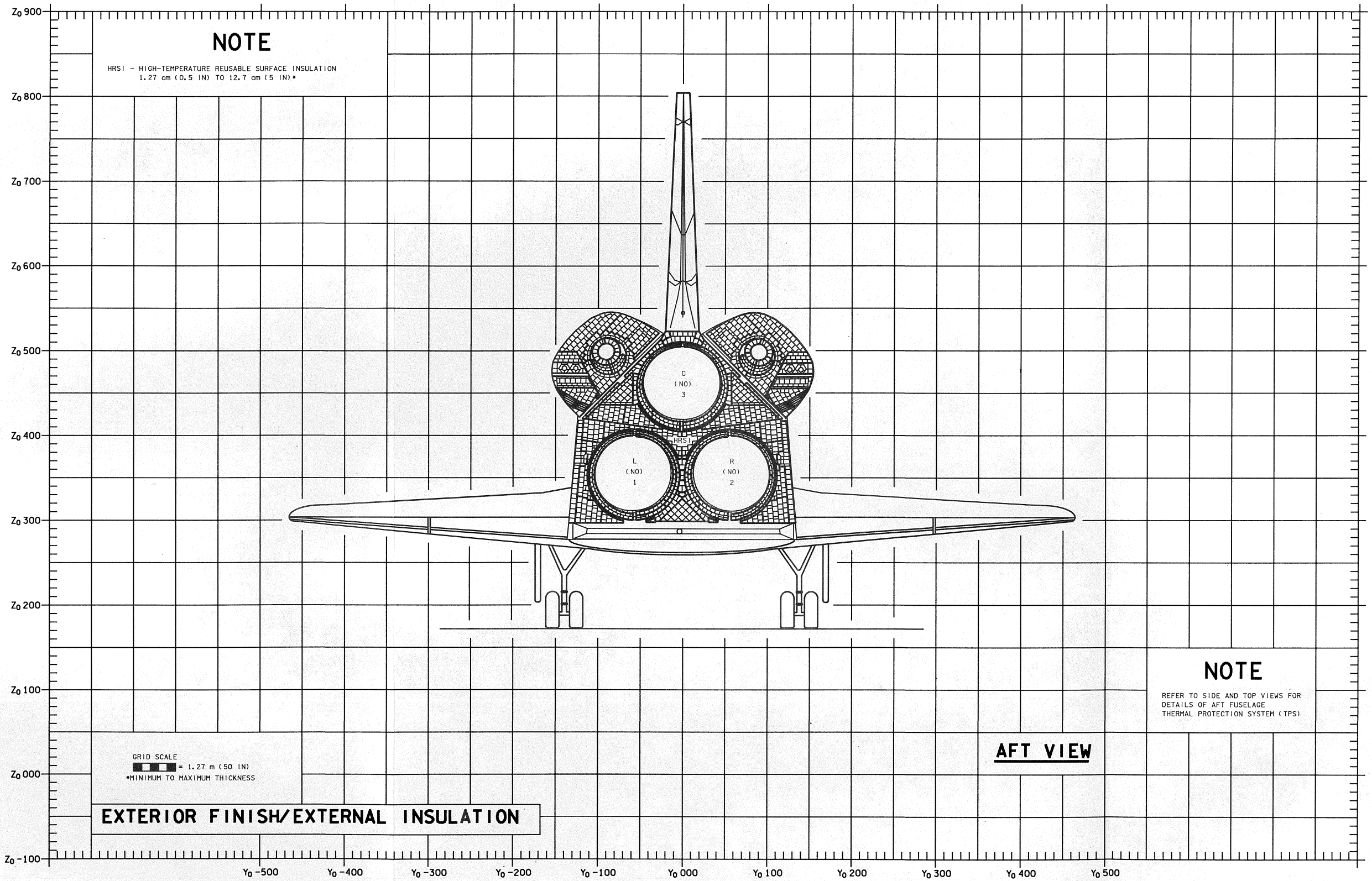

* 8 EX P/TILE 3

NATIONAL AERONAUTICS AND SPACE ADMINISTRATION LYNDON B. JOHNSON SPACE CENTER HOUSTON, TEXAS		SIGNATURE	DATE
		DSGN [signature]	10/31/84
EXTERNAL PENETRATIONS/TILE (AFT)		DR THERESA M WISONG	7/30/87
		ENGR V. HOWARD	7/21/90
		ENGR [signature]	9/21/90
		APP [signature]	9/21/90
DWG NO 7.8	SPACE SHUTTLE	APP	
	ALL	OMNIPLAN S. K. Kimball	10-17-90
SHEET 3 OF 4	PAGE 104.5 X 34	LTR E	PCN

BASIC REV E

DATE: 7/18/89	NAME: JMB	VERSION: INK: 3
DATE: 7/21/89	NAME: SEW	VERSION: INK: 4
DATE: 8/18/90	NAME: VSH	VERSION: INK: 5

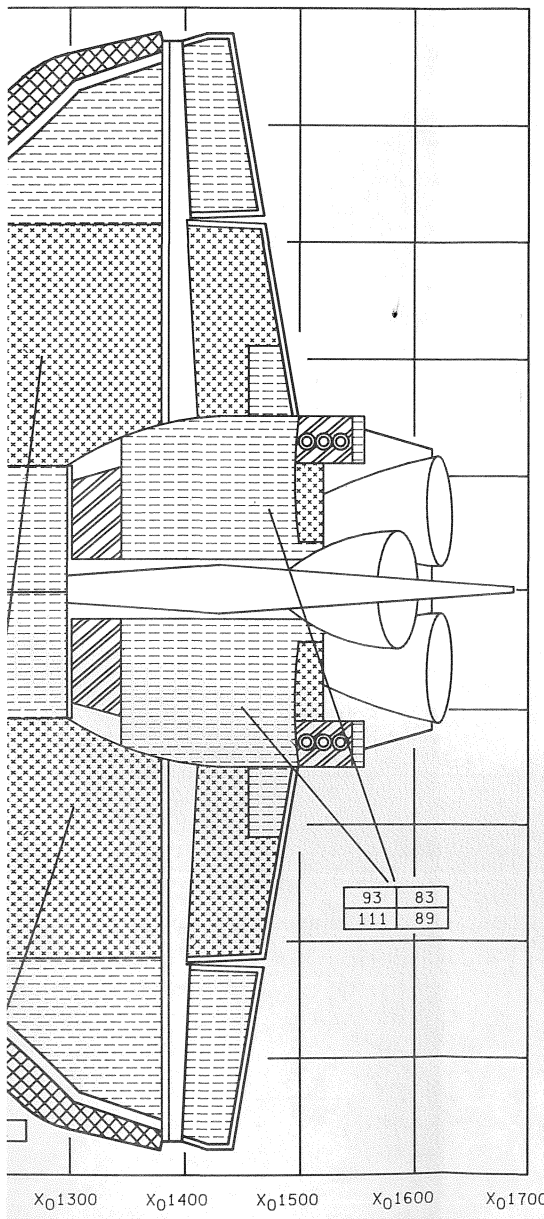

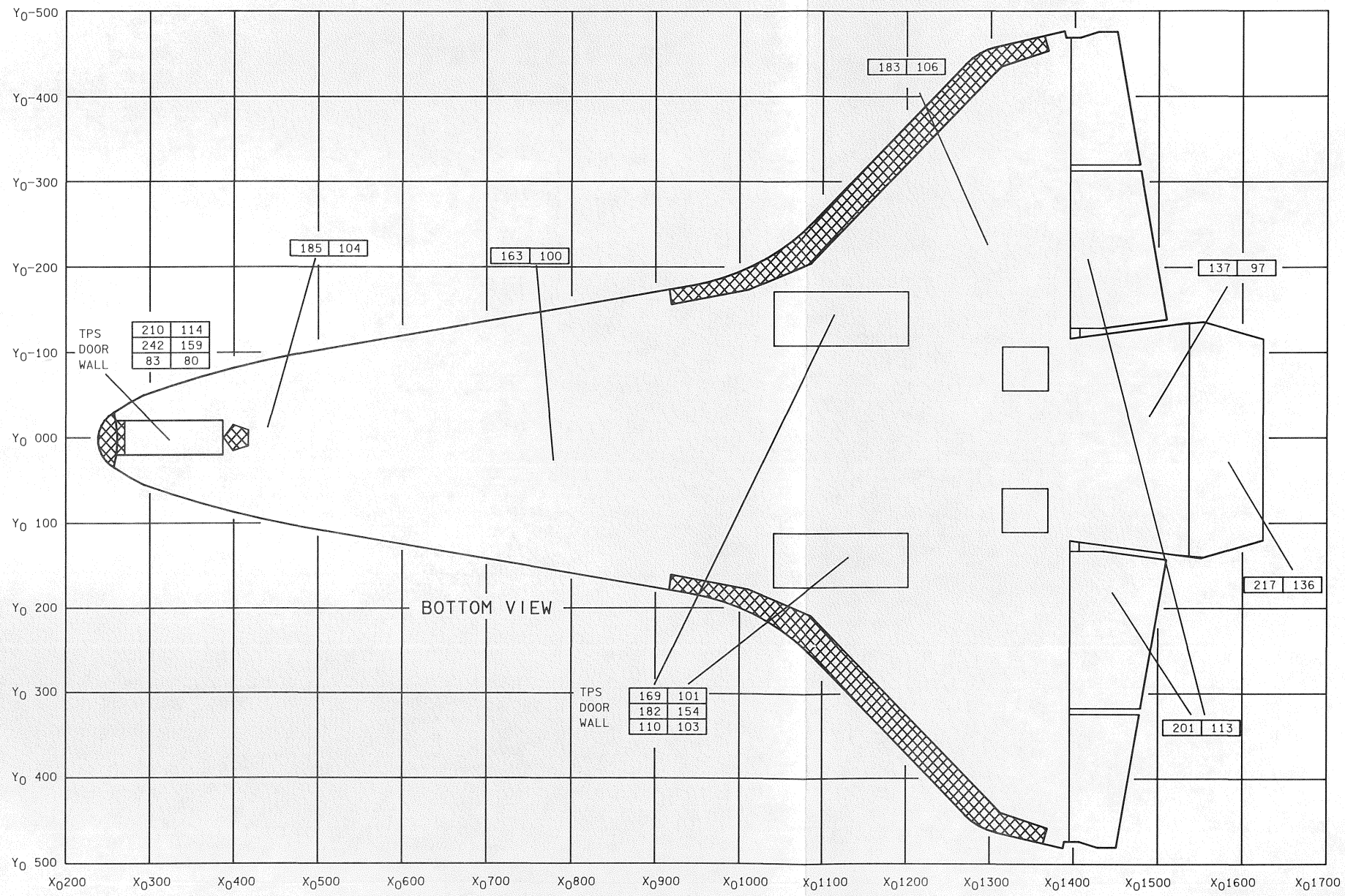

6. RCC CHIN PANEL ON OV102/104 ONLY. OV103 HAS HRSI TILE

5. OV 103/104 TPS CONFIGURATION. OV 102 WILL BE MODIFIED TO THIS CONFIGURATION EXCEPT FOR INSTRUMENTATION TILES

4. REFER TO TABLE 7-I FOR DRAWING REFERENCES

3. REFER TO SECTION II FOR GENERAL DETAILS AND SPECIFIC THICKNESS DATA RELATED TO PRESELECTED PENETRATION AND CUT-IN AREAS

2. POST-TOUCHDOWN TEMPERATURES OF THE ORBITER ARE INDICATED IN THE FOLLOWING MANNER

COMPONENT MEASURED	TOUCHDOWN	
	+4 MIN	+30 MIN

THERMAL PROTECTION SYSTEM (TPS) STRUCTURE

NOTES: 1. SINGLE-LEVEL BOXES INDICATE TPS TEMPERATURE ONLY.

CAUTION: IF ESCAPE PANEL RESCUE IS REQUIRED, THERMAL BLANKETS SHOULD BE USED TO PREVENT INJURY TO RESCUE PERSONNEL

8 EX PST TEMP 4

SIGNATURE	DATE	NATIONAL AERONAUTICS AND SPACE ADMINISTRATION LYNDON B. JOHNSON SPACE CENTER HOUSTON, TEXAS
DSGN THERESA WISONG	10/30/84	
DR		EXTERNAL POST TEMPERATURES
ENGR K. TURNER	8/17/90	
ENGR K. Turner	8/23/90	
APP Mark J. Fanning	8/20/90	
APP		SPACE SHUTTLE
OMNIPLAN S.K. Kimball	10-16-90	ALL
LTR E	PCN	126.5 X 34

DWG NO 7.8

PAGE SHEET 4 OF 4

BASIC REV E

T S R Q P O N M L K J

ACE INSULATION (BLACK)

SULATION (WHITE)

SULATION (WHITE)

BLE SURFACE INSULATION (WHITE)

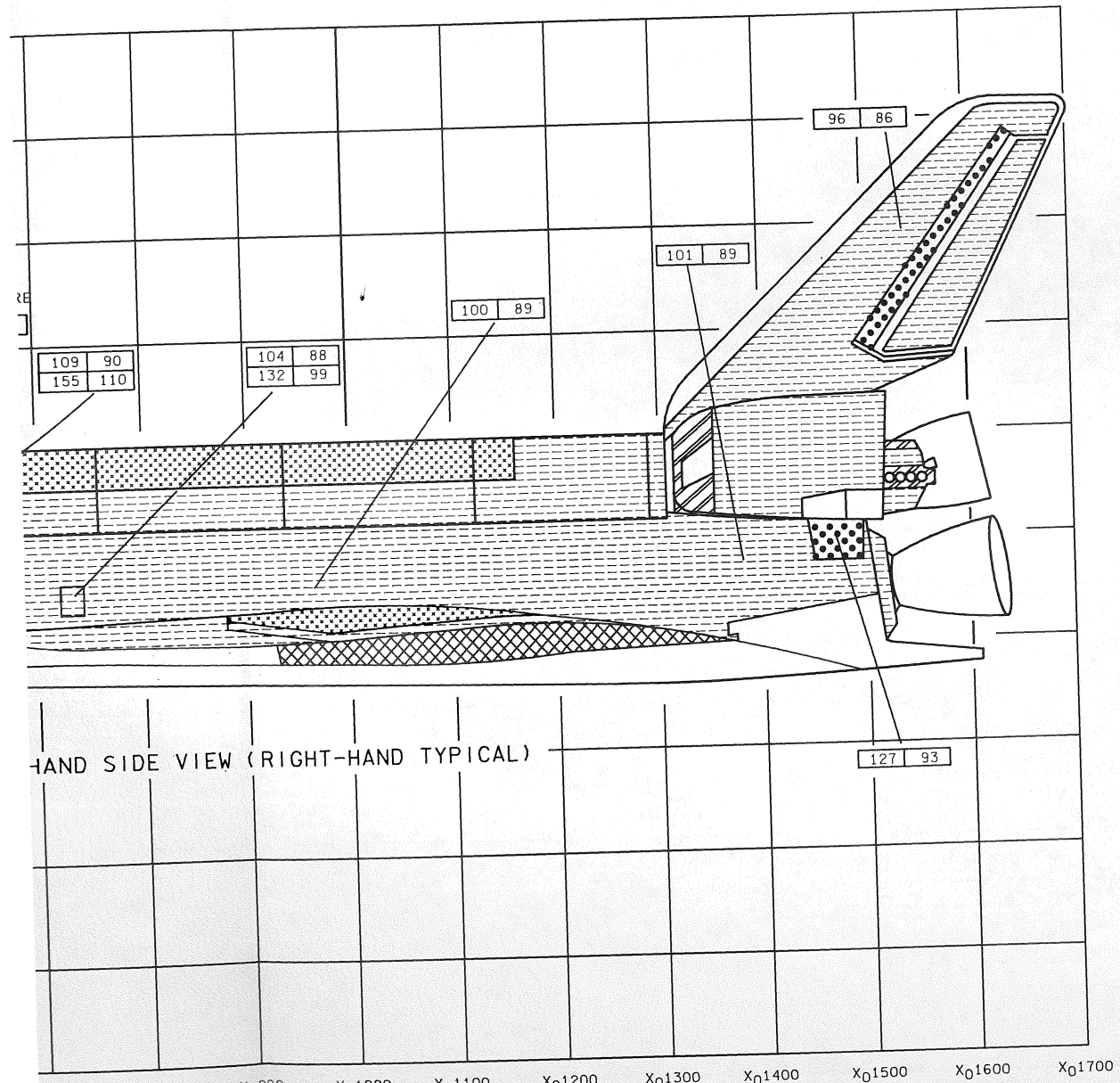

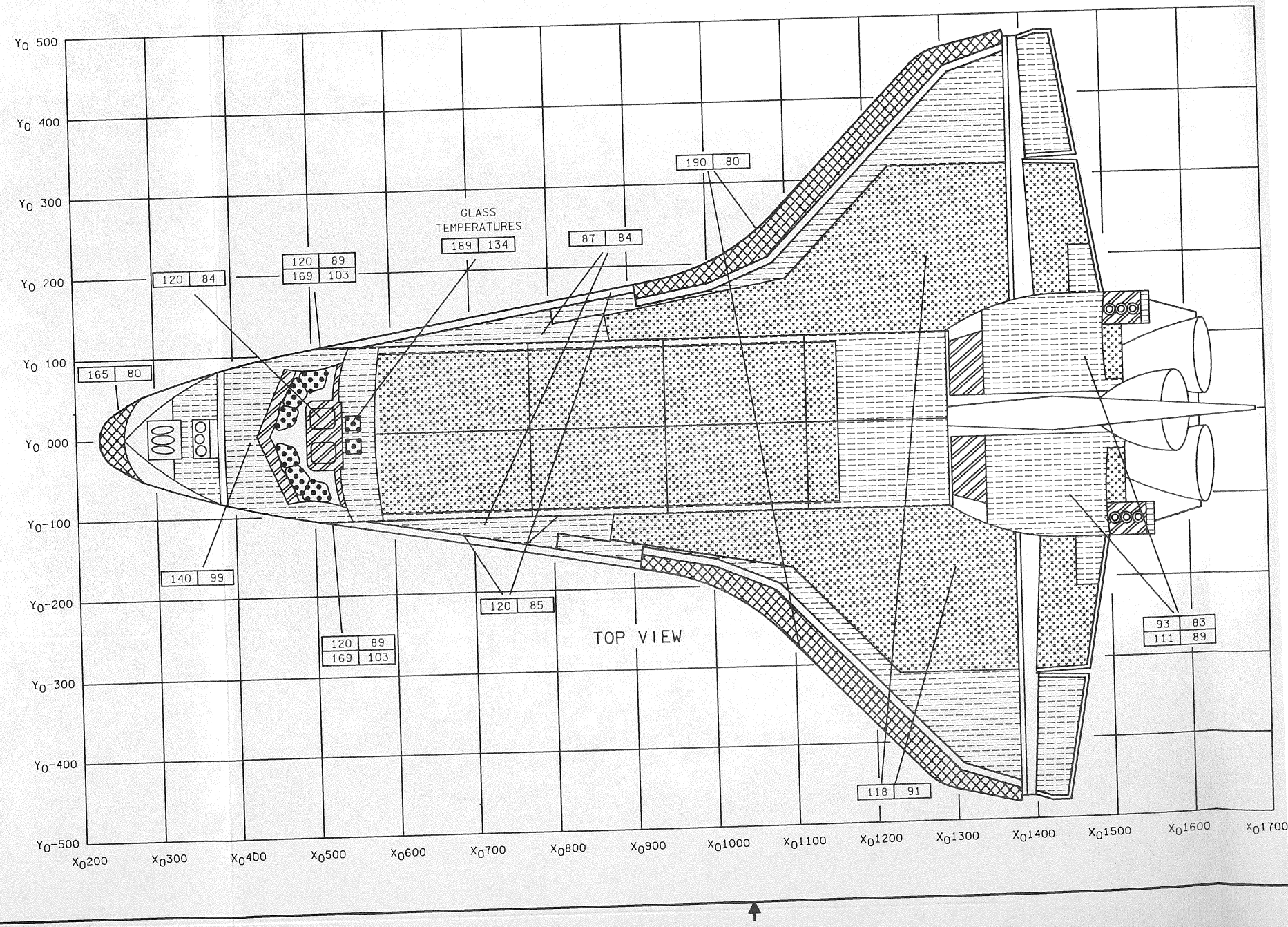

DATE: 8/18/90 | NAME: VSH | VERSION: INK5

W V U T S R Q P O N

8 7 6 5 4 3 2 1

RCC - REINFORCED CARBON-CARBON (BLACK)

HRSI/FRCI - HIGH-TEMPERATURE REUSABLE SURFACE INSULATION (BLACK)

LRSI - LOW-TEMPERATURE REUSABLE SURFACE INSULATION (WHITE)

FRSI - FRSI-NOMEX FELT REUSABLE SURFACE INSULATION (WHITE)

METAL OR GLASS

AFRSI - ADVANCED-FRSI (QUILTED) FELT REUSABLE SURFACE INSULATION (WHITE)

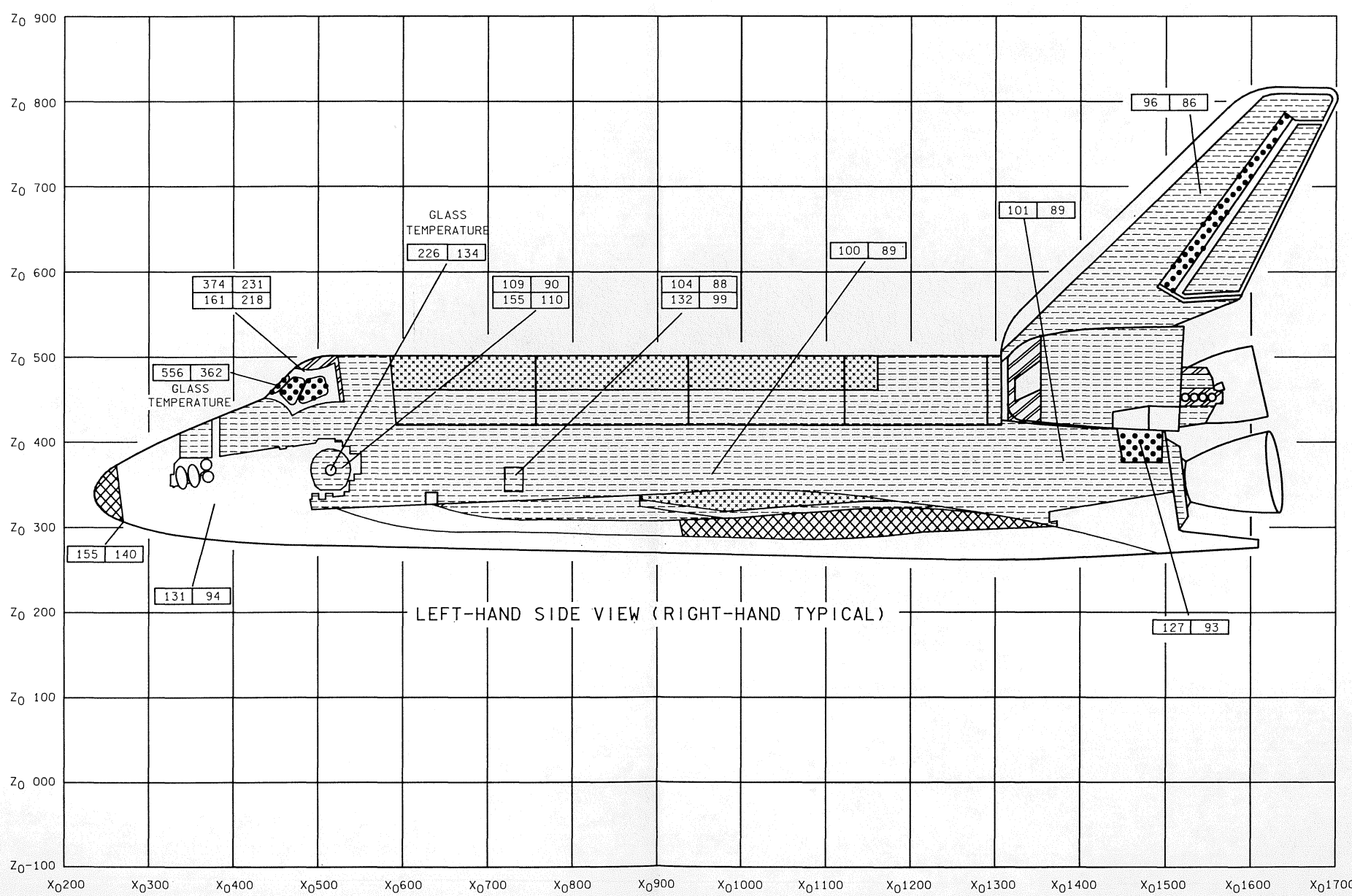

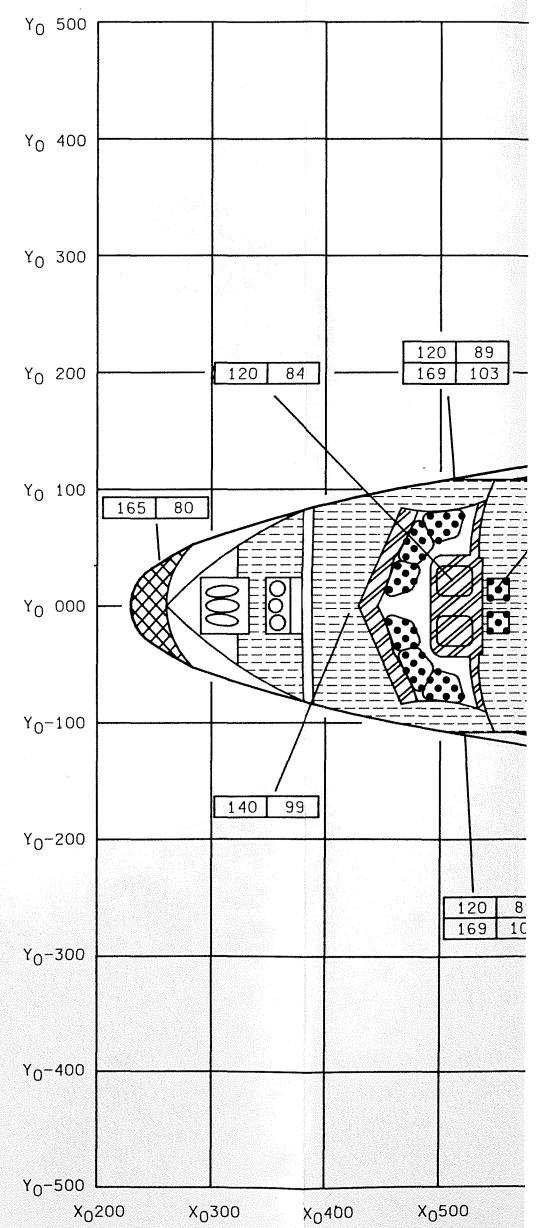

BASIC REV E

FOR DETAILED COMPONENT AND LOGIC INFORMATION REFER TO:

SSSH DWG NO.	SSSH DWG TITLE	VENDOR NAME	VENDOR DWG NO.	VENDOR SHEET NO.	REV	DATE	VENDOR DRAWING TITLE
7.1 (Sheets 1 and 2)	ATCS	R. I.	VS70-630109		J	10/7/89	SCHEMATIC DIAGRAM - ACTIVE THERMAL CONTROL
		R. I.	VS70-630102		T	12/5/89	SCHEMATIC DIAGRAM - ACTIVE THERMAL CONTROL
		R. I.	VS70-634102		B	7/27/90	ACTIVE THERMAL CONTROL SYSTEM - FLUID SCHEMATIC DIAGRAM
		R. I.	V070-634530		C	8/13/85	RADIATOR INSTALLATION ECLSS ACTIVE THERMAL CONTROL SYSTEM
		R. I.	V070-635100		B	4/27/87	COOLANT INSTALLATION AFT AVIONICS EQUIPMENT
		R. I.	VS70-750202		L	6/6/89	SCHEMATIC DIAGRAM - OI POWER AND CONTROL
7.2	AMMONIA BOILER SYSTEM	R. I	VS70-630109		J	10/7/89	SCHEMATIC DIAGRAM - ACTIVE THERMAL CONTROL
		R. I.	VS70-630102		T	12/5/89	SCHEMATIC DIAGRAM - ACTIVE THERMAL CONTROL
		R. I.	VS70-634102		B	7/27/90	ACTIVE THERMAL CONTROL SYSTEM - FLUID SCHEMATIC DIAGRAM
		R. I.	VS70-750202		L	6/6/89	SCHEMATIC DIAGRAM - OI POWER AND CONTROL
7.3 (Sheets 1 and 2)	FLASH EVAPORATOR SUBSYSTEM		V070-634485		D	9/13/88	LINE HEATER INSTALLATION
			VS70-630109		H	7/15/88	SCHEMATIC DIAGRAM ACTIVE THERMAL CONTROL
			VO70-755192		C	11/18/81	INSTRUMENTATION INSTALLATION - ECLSS OPERATIONAL
			VS70-630102		T	12/5/84	SCHEMATIC DIAGRAM ACTIVE THERMAL CONTROL
			VO70-754109		B	2/9/89	INSTRUMENTATION INSTL - OFI MID FUSELAGE
			VS70-634102		A	7/31/79	SCHEMATIC ACTIVE THERMAL CONTROL SUBSYSTEM
			VO70-754102		F	4/15/87	INSTRUMENTATION INSTL - OFI MID FUSELAGE
7.4	ARS H_2O	R. I.	V070-613896	1-7	E	10/24/85	WATER COOLANT SYSTEM INSTALLATION. ARS, FLIGHT DECK AND DFI. ECLSS
		R. I.	V070-613360	1-3	B/C03	11/3/80	COOLANT INSTL-AVIONICS EQUIPMENT. FORWARD BAY 1 AND 2
		R. I.	V070-613361	1-5	E	11/29/82	COOLANT SYSTEM INSTALLATION AVIONIC EQUIPT CREW MODULE, BAY 3B
		R. I.	V070-613362	1-3	B	3/11/88	INSTALLATION-WATER COOLANT, AVIONICS BAY 3A COLD PLATES
		R. I.	VS70-960102		F04	11/8/89	INTEGRATED SYSTEM SCHEMATIC ORBITER 0V-102 ENVIRONMENTAL CONTROL AND LIFE SUPPORT SUBSYSTEM
		R. I.	VS70-960102	12(60CA)	F04	9/15/89	ARS CABIN AIR CIRCULATION AND TEMPERATURE CONTROLLER 1
		R. I.	VS70-960102	13(60CB)	F04	9/15/89	ARS CABIN AIR CIRCULATION AND TEMPERATURE CONTROLLER 2
		R. I.	VS70-960102	15(60CD)	F04	8/7/89	ARS WATER COOLANT LOOP 1 FLUIDS/CONTROL
		R. I.	VS70-960102	16(60CE)	F01	3/15/84	ARS WATER COOLANT LOOP 1 CONTROL
		R. I.	VS70-960102	17(60CF)	F01	3/16/84	ARS WATER COOLANT LOOP 2 FLUIDS/CONTROL
		R. I.	VS70-960102	18(60CG)	F02	1/17/85	ARS WATER COOLANT LOOP 2 CONTROL

DWG	SIGNATURE	DATE	DWG	SIGNATURE	DATE
7.1	ENGR M. LANGLEY			ENGR	
	ENGR Mary L Langley	11/12/91		ENGR	
7.2	ENGR M. LANGLEY			ENGR	
	ENGR Mary L Langley	11/12/91		ENGR	
7.3	ENGR V. HOWARD			APP Mark J Hissey	11-15-91
	ENGR V. Howard	11/6/91		APP	
7.4	ENGR J. SPIVEY			OMNIPLAN	
	ENGR	11/12/91		LTR E	PCN 1

NATIONAL AERONAUTICS AND SPACE ADMINISTRATION
LYNDON B. JOHNSON SPACE CENTER HOUSTON, TEXAS

VENDOR DRAWING REFERENCES

SPACE SHUTTLE	TBL NO 7-I
ALL	
	PAGE 7.I-1 SHEET 1 OF 4

BASIC REV E-1

FOR DETAILED COMPONENT AND LOGIC INFORMATION REFER TO:

SSSH DWG NO.	SSSH DWG TITLE	VENDOR NAME	VENDOR DWG NO.	VENDOR SHEET NO.	REV	DATE	VENDOR DRAWING TITLE
7.4 (CONC'D)	ARS H_2O	R. I.	VS70-960099		A12	1/24/84	INTEGRATED SYSTEM SCHEMATIC ORBITER OV-099, -103, AND -104 ENVIRONMENTAL CONTROL AND LIFE SUPPORT SUBSYSTEM
		R. I.	VS70-960099	12(60CA)	A12	12/28/84	ARS CABIN AIR CIRCULATION AND TEMPERATURE CONTROLLER 1
		R. I.	VS70-960099	13(60CB)	A08	5/22/84	ARS CABIN AIR CIRCULATION AND TEMPERATURE CONTROLLER 2
		R. I.	VS70-960099	15(60CD)	A08	5/23/84	ARS WATER COOLANT LOOP 1 FLUIDS/CONTROL
		R. I.	VS70-960099	16(60CE)	A12	1/15/82	ARS WATER COOLANT LOOP 1 CONTROL
		R. I.	VS70-960099	17(60CF)	A07	1/19/84	ARS WATER COOLANT LOOP 2 FLUIDS/CONTROL
		R. I.	VS70-960099	18(60CG)	A12	12/28/88	ARS WATER COOLANT LOOP 2 CONTROL
		R. I.	VS70-960099	23(60CM)	A08	5/25/84	ARS CABIN AIR CIRCULATION INSTRUMENTATION
		R. I.	VS70-960099	24(60CN)	A05	6/02/83	ARS WATER COOLANT LOOP 1 INSTRUMENTATION, PART I
		R. I.	VS70-960099	25(60CP)	A07	1/19/84	ARS WATER COOLANT LOOP 2 INSTRUMENTATION, PART I
		R. I.	VS70-960099	26(60CS)	A05	6/03/83	ARS WATER COOLANT LOOP 1 INSTRUMENTATION, PART II
		R. I.	VS70-960099	27(60CT)	NC	4/17/80	ARS WATER COOLANT LOOP 2 INSTRUMENTATION, PART II
		R. I.	VS70-610109	1-8	E	4/23/88	SCHEMATIC DIAGRAM-ATMOSPHERIC REVITALIZATION SUBSYSTEM
		R. I.	VO70-613891	1-7	E	7/6/87	ARS WATER COOLANT SYSTEM INSTALLATION-CREW MODULE, MID-DECK TO FLIGHT DECK
		R. I.	VO70-613890	1-4	C	6/21/85	WATER SYSTEM INSTALLATION-ARS COOLING CABIN, ECLSS
7.5	THERMAL AFT FUSELAGE	R. I.	V070-635100	1,2	B	4/27/87	COOLANT INSTALLATION - AFT AV EQUIPMENT
		R. I.	V070-635300	1-24	E	8/6/88	THERMAL CONTROL INSTL-ECLSS ACTIVE, AFT FUSELAGE
		R. I.	V070-635103	1-3	A	8/27/79	COLDPLATE - AFT FUS AV EQUIPMENT SHELF 3, BAY 4
		R. I.	V070-705114	1-5	G/H13	4/9/87	EQUIPMENT INSTALLATION - AFT AV BAY 4
		R. I.	V070-705205	1-5	H	4/9/87	EQUIPMENT INSTALLATION - AFT AV BAY 5
		R. I.	V070-705306	1-4	G/H03	3/31/86	EQUIPMENT INSTALLATION - AFT AV BAY 6
		R. I.	V070-755192	1-2	C	11/18/81	INSTRUMENTATION INSTALLATION - ECLSS OPERATIONAL
		R. I.	V070-755102	1-2	E	3/3/89	INSTRUMENTATION INSTALLATION AFT FUSELAGE, OPERATIONAL

DWG	SIGNATURE	DATE	DWG	SIGNATURE	DATE
7.4	ENGR J. SPIVEY			ENGR	
(CONC'D)	ENGR [signature]	10/1/90		ENGR	
7.5	ENGR J. L. SPIVEY			ENGR	
	ENGR [signature]	10/1/90		ENGR	
	ENGR			APP [signature]	10/23/90
	ENGR			APP	
	ENGR			OMNIPLAN	
	ENGR			LTR E PCN	

NATIONAL AERONAUTICS AND SPACE ADMINISTRATION
LYNDON B. JOHNSON SPACE CENTER HOUSTON, TEXAS

VENDOR DRAWING REFERENCES

SPACE SHUTTLE | TBL NO 7-1

ALL

BASIC REV E

FOR DETAILED COMPONENT AND LOGIC INFORMATION REFER TO:

SSSH DWG NO.	SSSH DWG TITLE	VENDOR NAME	VENDOR DWG NO.	VENDOR SHEET NO.	REV	DATE	VENDOR DRAWING TITLE
7.6	TCS - INSTRUMENTATION MID FUSELAGE	NASA	JSC-18366		-	7/88	OI SPACE SHUTTLE ORBITER TCS TEMPERATURE MEASUREMENT LOCATIONS
		RI	V070-582061			-	TBS
		RI	V070-584050		F	1/17/90	HYDRAULICS SUBSYSTEM INSTALLATION -MID FUSE
		RI	VO70-586096		-	8/27/80	HYDRAULICS SUBSYSTEM INSTALLATION -RH WING AND ELEVON ACTUATORS
		RI	V070-586140		D	11/22/89	HYDRAULICS SUBSYSTEM INSTALLATION
		RI	V070-586145		B	5/27/88	HYDRAULICS SUBSYSTEM INSTALLATION - RIGHT- HAND MLG WHEEL WELL
		RI	V070-586266		C	8/12/88	HYDRAULICS SUBSYSTEM INSTALLATION -STRUT, MAIN LANDING GEAR
		RI	V070-634460		H	6/15/88	MID FUSELAGE SYBSYSTEM ECLSS INSTL - FRAME Xo582 THROUGH Xo693
		RI.	V070-634465				TBS
		RI	V070-754102				TBS
		RI	V070-754109				TBS
		RI	V070-754192		B	02/08/89	INSTRUMENTATION INSTALLATION - OFI MID FUS Xo576 THROUGH Xo1307
7.7	TPS/STRUCTURE INSTRUMENTATION	RI	V070-756101	ALL	-	7/27/81	INSTRUMENTATION INSTALLATION - WING
		RI	V070-754106	ALL	-	7/23/81	INSTRUMENTATION INSTALLATION - PLBD
		RI	V070-751102	ALL	A	10/21/80	INSTRUMENTATION INSTALLATION OPERATIONAL FORWARD FUSELAGE - UPPER
		RI.	V070-192135	ALL	C	10/20/88	TPS INSTALLATION - INSTRUMENTATION
		RI	V070-754104	ALL	-	6/22/81	INSTRUMENTATION INSTALLATION - MID FUSELAGE, LOWER SURFACE
		RI	V070-752102	ALL	D	5/14/87	INSTRUMENTATION INSTALLATION FORWARD FUSELAGE, LOWER
		RI	V070-755102	ALL	E	3/3/89	INSTRUMENTATION INSTALLATION - AFT FUSELAGE, OPERATIONAL
		MD	73A760210	1-10	E	1/5/81	ELECTRICAL INSTALLATION POD - OPERATIONAL
		RI	V070-754103	ALL	-	6/27/81	INSTRUMENTATION INSTALLATION - MID FUSELAGE, SIDEWALL
		RI	V070-751012	ALL	B	4/29/83	INSTRUMENTATION INSTALLATION, FORWARD RCS, STRUCTURE, OFI
		RI	V070-754105	ALL	-	7/21/81	INSTRUMENTATION INSTALLATION - Xo582 FRAME DEVELOPMENT

DWG	SIGNATURE	DATE	DWG	SIGNATURE	DATE
7.6	ENGR L. RICHE			ENGR	
	ENGR L. Riche	10/23/90		ENGR	
7.7	ENGR J. M. SOLOMON			ENGR	
	ENGR J. M. Solomon	10/23/90		ENGR	
	ENGR			APP Mark D. Fenning	10/23/90
	ENGR			APP	
	ENGR			OMNIPLAN	
	ENGR			LTR E PCN	

NATIONAL AERONAUTICS AND SPACE ADMINISTRATION
LYNDON B. JOHNSON SPACE CENTER HOUSTON, TEXAS

VENDOR DRAWING REFERENCES

SPACE SHUTTLE | TBL NO 7-I

ALL

BASIC REV E

FOR DETAILED COMPONENT AND LOGIC INFORMATION REFER TO:

SSSH DWG NO.	SSSH DWG TITLE	VENDOR NAME	VENDOR DWG NO.	VENDOR SHEET NO.	REV	DATE	VENDOR DRAWING TITLE
7.8 (SHEETS 1-4)	EXTERNAL TILE DRAWING	R. I.	V70-900-030 V70-900-040	-01	C	7/30/85	LOWER FUSELAGE
		R. I.	V70-900-030 V70-900-040	-02	C	9/16/85	LOWER WING LH
		R. I.	V70-900-030 V70-900-040	-04	C	9/12/85	LOWER WING RH
		R. I.	V70-900-030 V70-900-040	-05	B	9/23/85	UPPER FUSELAGE
		R. I.	V70-900-030 V70-900-040	-06	B	9/13/85	UPPER WING LH
		R. I.	V70-900-030 V70-900-040	-07	B	9/09/85	UPPER WING RH
		R. I.	V70-900-030 V70-900-040	-08	C	7/25/85	FUSELAGE LH SIDE
		R. I.	V70-900-030 V70-900-040	-09	C	9/10/85	FUSELAGE RH SIDE
		R. I.	V70-900-030 V70-900-040	-10	C	5/30/86	VERTICAL STABILIZER
		R. I.	V70-900-030 V70-900-040	-11	C	1/14/85	AFT HEAT SHIELD, OMS POD, RCS POD
		R. I.	V070-391147	-01	-	1/15/87	LOWER FORWARD FUSELAGE CHIN PANEL

DWG	SIGNATURE	DATE	DWG	SIGNATURE	DATE
7.8-1,4	ENGR K. TURNER			ENGR	
	ENGR K. Turner	10/2/90		ENGR	
7.8-2,3	ENGR V. HOWARD			ENGR	
	ENGR Vern Howard	10/10/90		ENGR	
	ENGR			APP Mark D. Fenning	10/23/90
	ENGR			APP	
	ENGR			OMNIPLAN	
	ENGR			LTR E PCN	

NATIONAL AERONAUTICS AND SPACE ADMINISTRATION
LYNDON B. JOHNSON SPACE CENTER HOUSTON, TEXAS

VENDOR DRAWING REFERENCES

SPACE SHUTTLE | TBL NO 7-I

ALL

BASIC REV E

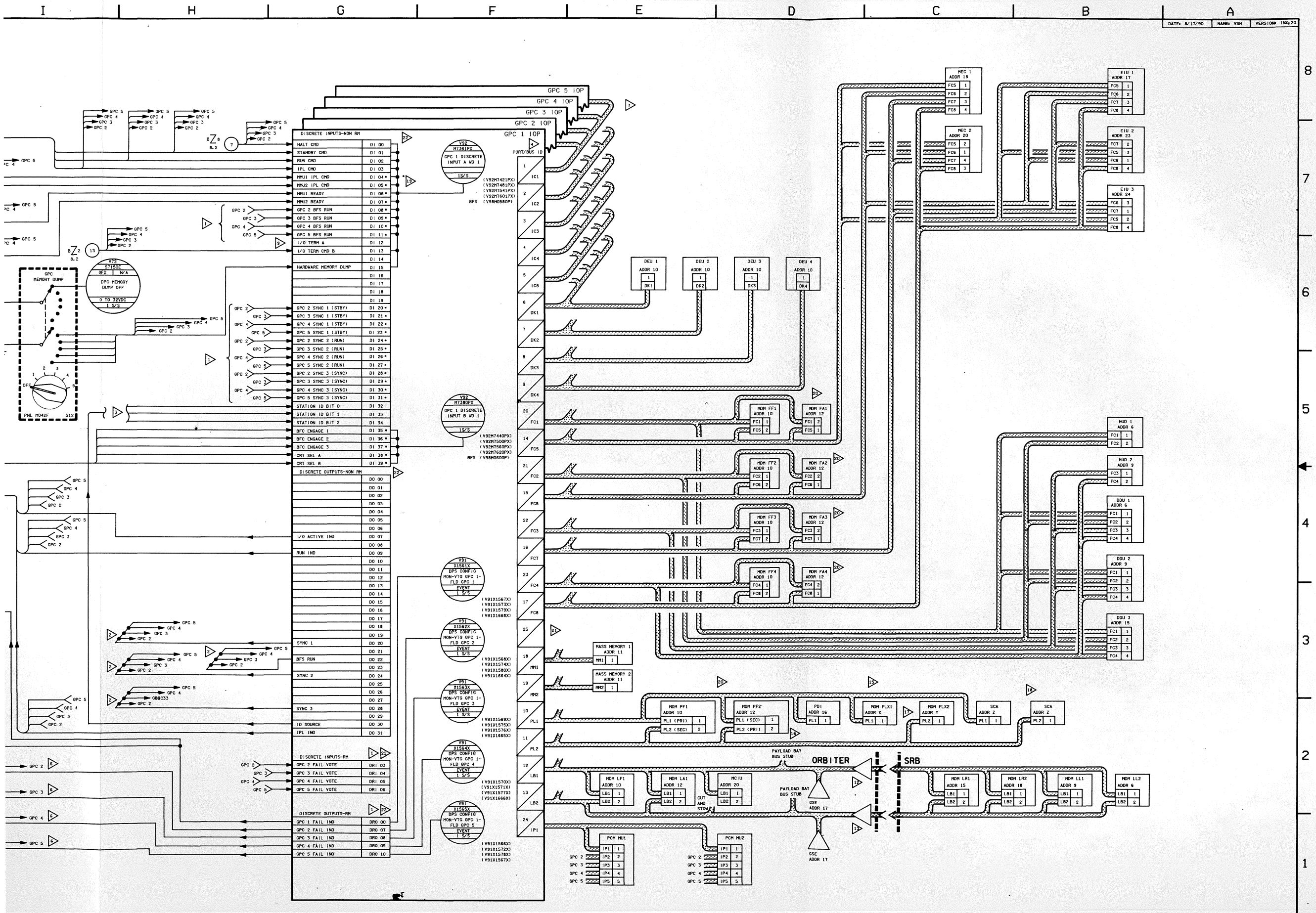

DATE: 8/17/90
NAME: VSH
VERSION: ING 20
DISCRETE INPUTS-NON RM
DISCRETE OUTPUTS-NON RM
DISCRETE INPUTS-RM
DISCRETE OUTPUTS-RM
HALT CMD
STANDBY CMD
RUN CMD
IPL CMD
MMU1 IPL CMD
MMU2 IPL CMD
MMU1 READY
MMU2 READY
GPC 2 BFS RUN
GPC 3 BFS RUN
GPC 4 BFS RUN
GPC 5 BFS RUN
I/O TERM A
I/O TERM CMD B
HARDWARE MEMORY DUMP
GPC 2 SYNC 1 (STBY)
GPC 3 SYNC 1 (STBY)
GPC 4 SYNC 1 (STBY)
GPC 5 SYNC 1 (STBY)
GPC 2 SYNC 2 (RUN)
GPC 3 SYNC 2 (RUN)
GPC 4 SYNC 2 (RUN)
GPC 5 SYNC 2 (RUN)
GPC 2 SYNC 3 (SYNC)
GPC 3 SYNC 3 (SYNC)
GPC 4 SYNC 3 (SYNC)
GPC 5 SYNC 3 (SYNC)
STATION ID BIT 0
STATION ID BIT 1
STATION ID BIT 2
BFC ENGAGE 1
BFC ENGAGE 2
BFC ENGAGE 3
CRT SEL A
CRT SEL B
I/O ACTIVE IND
RUN IND
SYNC 1
BFS RUN
SYNC 2
SYNC 3
ID SOURCE
IPL IND
GPC 2 FAIL VOTE
GPC 3 FAIL VOTE
GPC 4 FAIL VOTE
GPC 5 FAIL VOTE
GPC 1 FAIL IND
GPC 2 FAIL IND
GPC 3 FAIL IND
GPC 4 FAIL IND
GPC 5 FAIL IND
GPC 5 IOP
GPC 4 IOP
GPC 3 IOP
GPC 2 IOP
GPC 1 IOP
PORT/BUS ID
GPC MEMORY DUMP
DPC MEMORY DUMP OFF
PNL M042F
MEC 1 ADDR 18
MEC 2 ADDR 20
EIU 1 ADDR 17
EIU 2 ADDR 23
EIU 3 ADDR 24
DEU 1 ADDR 10
DEU 2 ADDR 10
DEU 3 ADDR 10
DEU 4 ADDR 10
MDM FF1 ADDR 10
MDM FA1 ADDR 12
MDM FF2 ADDR 10
MDM FA2 ADDR 12
MDM FF3 ADDR 10
MDM FA3 ADDR 12
MDM FF4 ADDR 10
MDM FA4 ADDR 12
HUD 1 ADDR 6
HUD 2 ADDR 9
DDU 1 ADDR 6
DDU 2 ADDR 9
DDU 3 ADDR 15
MASS MEMORY 1 ADDR 11
MASS MEMORY 2 ADDR 11
MDM PF1 ADDR 10
MDM PF2 ADDR 12
PDI ADDR 16
MDM FLX1 ADDR X
MDM FLX2 ADDR Y
SCA ADDR Z
PAYLOAD BAY BUS STUB
ORBITER
SRB
MDM LF1 ADDR 10
MDM LA1 ADDR 12
MCIU ADDR 20
CUT AND STOW
GSE ADDR 17
MDM LR1 ADDR 15
MDM LR2 ADDR 18
MDM LL1 ADDR 9
MDM LL2 ADDR 6
PCM MU1
PCM MU2

BASIC REV E

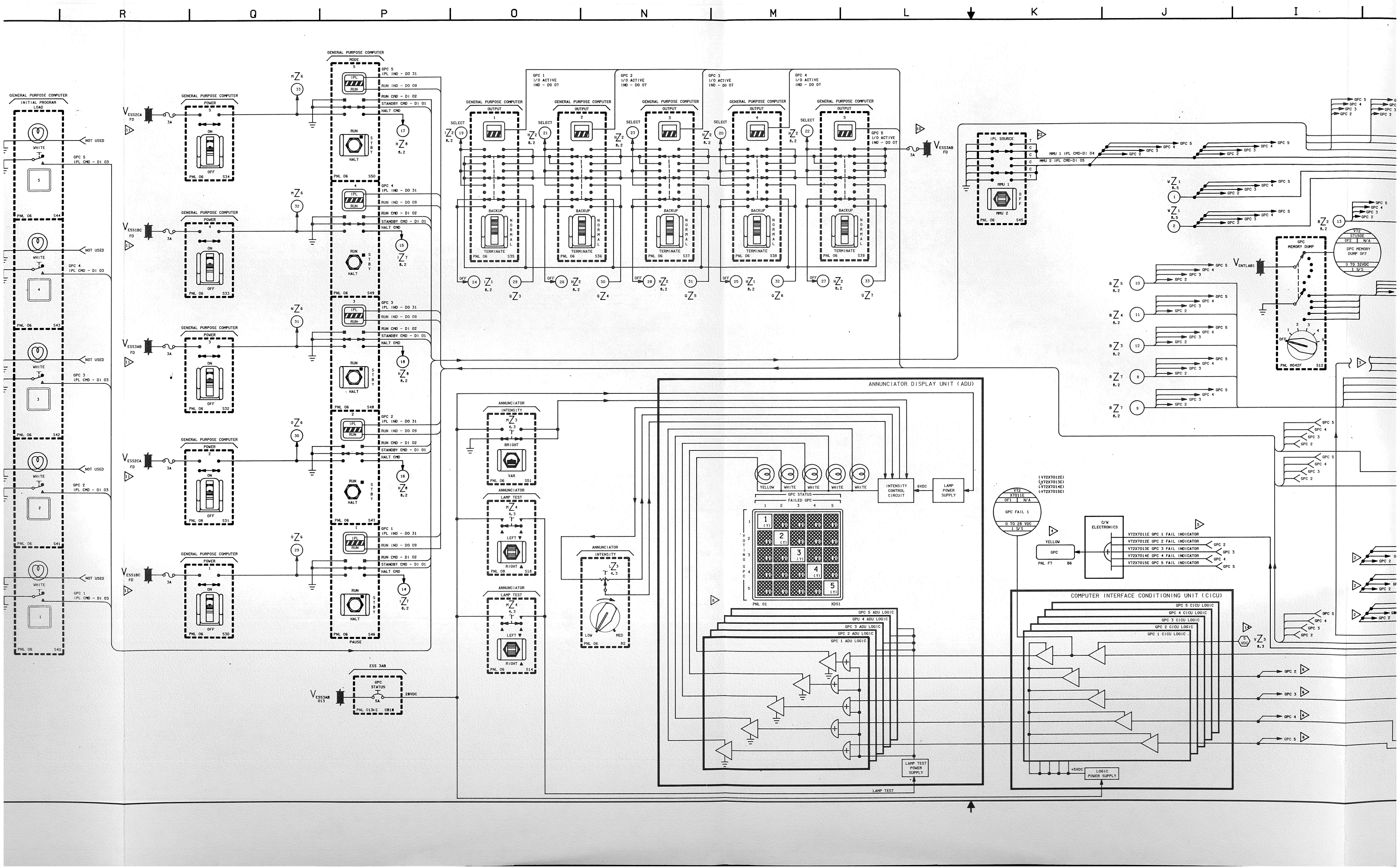

R
Q
P
O
N
M
L
K
J
I
GENERAL PURPOSE COMPUTER
INITIAL PROGRAM LOAD
NOT USED
GPC 5 IPL CMD - DI 03
GPC 4 IPL CMD - DI 03
GPC 3 IPL CMD - DI 03
GPC 2 IPL CMD - DI 03
GPC 1 IPL CMD - DI 03
GENERAL PURPOSE COMPUTER
POWER
ON
OFF
GENERAL PURPOSE COMPUTER
MODE
IPL
RUN
HALT
STBY
PAUSE
GPC 5 IPL IND - DO 31
RUN IND - DO 09
RUN CMD - DI 02
STANDBY CMD - DI 01
HALT CMD
GPC 4 IPL IND - DO 31
GPC 3 IPL IND - DO 31
GPC 2 IPL IND - DO 31
GPC 1 IPL IND - DO 31
GPC 1 I/O ACTIVE IND - DO 07
GPC 2 I/O ACTIVE IND - DO 07
GPC 3 I/O ACTIVE IND - DO 07
GPC 4 I/O ACTIVE IND - DO 07
GPC 5 I/O ACTIVE IND - DO 07
SELECT
OUTPUT
BACKUP
NORMAL
TERMINATE
IPL SOURCE
MMU 1 IPL CMD-DI 04
MMU 2 IPL CMD-DI 05
GPC MEMORY DUMP
DPC MEMORY DUMP OFF
0 TO 32VDC
1 S/S
ANNUNCIATOR DISPLAY UNIT (ADU)
ANNUNCIATOR
INTENSITY
BRIGHT
VAR
LAMP TEST
LEFT
RIGHT
LOW
MED
YELLOW
WHITE
INTENSITY CONTROL CIRCUIT
6VDC
LAMP POWER SUPPLY
GPC STATUS
FAILED GPC
VOTING GPC
XDS1
GPC 5 ADU LOGIC
GPU 4 ADU LOGIC
GPC 3 ADU LOGIC
GPC 2 ADU LOGIC
GPC 1 ADU LOGIC
LAMP TEST POWER SUPPLY
LAMP TEST
GPC FAIL 1
0 TO 28 VDC
1 S/S
C/W ELECTRONICS
V72X7011E GPC 1 FAIL INDICATOR
V72X7012E GPC 2 FAIL INDICATOR
V72X7013E GPC 3 FAIL INDICATOR
V72X7014E GPC 4 FAIL INDICATOR
V72X7015E GPC 5 FAIL INDICATOR
COMPUTER INTERFACE CONDITIONING UNIT (CICU)
GPC 5 CICU LOGIC
GPC 4 CICU LOGIC
GPC 3 CICU LOGIC
GPC 2 CICU LOGIC
GPC 1 CICU LOGIC
+5VDC
LOGIC POWER SUPPLY
ESS 3AB
GPC STATUS
28VDC

DATE: 4/05/88	NAME: CAR	VERSION: BPT: 2
DATE: 4/13/88	NAME: MAG	VERSION: INK: 19
DATE: 8/17/90	NAME: VSH	VERSION: INK: 20

22 - TYPICAL FUNCTIONAL REPRESENTATION OF DISCRETE INPUT AND DISCRETE OUTPUT CIRCUITS. FOR DETAILS ABOUT A SPECIFIC CIRCUIT SEE RI DRAWING 70-720239

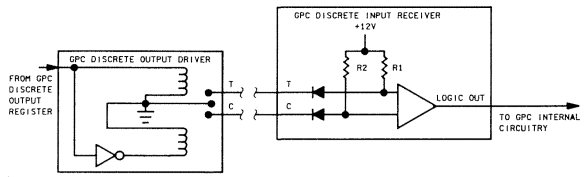

23 - BCE IS THE SELF-TEST BCE IN AP101-S. IT HAS NO MEANING IN THE AD101-B

24 - MDM PORT NUMBERS 1 AND 2 REFER TO THE HARDWARE PORTS NOT TO PRIMARY OR SECONDARY PORT DESIGNATIONS IN SOFTWARE

13 - DISCRETES INDICATED WITH * ARE SOFTWARE RM'D. DI 20-31 ARE RM'D ONLY FOR 000 PATTERN ON GPC'S NOT IN THE CURRENT COMMON SET. DI 35-37 ARE RM'D ON DISENGAGE ONLY. CS MAJORITY IS DEFINED AS FOLLOWS:

#CS GPCS	MAJORITY
5	3
4	3
3	2
2	2
1	1

14 - SCA'S ARE ATTACHED IN PAIRS. ONE SCA PER BUS, AND SHARE THE SAME BTU ADDRESS

17 - FLEX MDMS MAY BE EITHER SINGULAR OR IN A FLEX PAIR. FLEX PAIR MDMS HAVE THE SAME BTU ADDRESS

18 - PDI MAY BE ON EITHER PL BUS

19 - EXACT CONFIGURATION IS MISSION DEPENDENT. THERE CAN BE AT MOST 4 BTU ADDRESSES (NOT INCLUDING PDI OR PL MDMS) ON A BUS WITH A COMBINED MAX OF 5 FOR BOTH PL BUSES. (X, Y AND Z MAY BE ANY OF 6, 9, 15, 29, OR 30)

20 - POWER FOR 'SELF FAIL' CICU DRIVER IS PROVIDED BY SELF'S 5 VDC CONVERTER

21 - DBIA 2, GSE AND SRB CHANNELS

22 - DBIA 1, GSE AND SRB CHANNELS

11 - A SINGLE HALT CONTACT IS POWERED FROM ONLY ONE OF THAT GPC'S 3 POWER SWITCH CONTACTS. FOR EXACT SWITCH CONFIGURATION SEE DRAWING 8.11

12 - FUSE IS LOCATED IN FUSE HOLDER BEHIND PNL 06

9 - I/O TERMINATE CMD B - TERMINATES FC1 THROUGH FC8
I/O TERMINATE CMD A - TERMINATES PL1, 2 AND LDB1, 2(NOT WIRED EXTERNALLY)

8 - ADU LOGIC CARD OUTPUTS ARE ROUTED TO APPROPRIATE COMPUTER STATUS LIGHTS ACCORDING TO DRO OUTPUTS DEFINED IN NOTE 1

7 - GPC X COMMANDS ON ICC X AND LISTENS ON THE OTHER ICC BUSES

6 - DELETED

5 - DRIVEN BY RESPECTIVE GPC SELF FAIL OUTPUT

4 - LAMP WILL BE ILLUMINATED DURING LEFT LAMP TEST VIA POWER FROM C&W ELECTRONICS. SEE DRAWING 4.3 FOR DETAILS

3 - ID SOURCE (DO 30) 5 VDC IS STRAPPED BACK INTO STATION ID BITS 0, 1 AND 2 (DI 32, 33 AND 34 RESPECTIVELY) TO ESTABLISH THE FOLLOWING GPC STATION ID'S:

GPC NO	DI (BIT) 33 (01)	33 (11)	34 (2)
1	0	0	1
2	0	1	0
3	0	1	1
4	1	0	0
5	1	0	1

2 - DISCRETES ARE INPUT INTO OTHER GPC'S IN ACCORDANCE WITH NOTE 1

NOTES: 1 - DISCRETE INPUT ORIGINATION AND DISCRETE OUTPUT DESTINATION GPC ASSIGNMENTS

GPC NO	DI 8	9	10	11	20	21	22	23	24	25	26	27	28	29	30	31	DRI 03	04	05	06	DRO 00	07	08	09	10
1	GPC 2	GPC 3	GPC 4	GPC 5	GPC 2	GPC 3	GPC 4	GPC 5	GPC 2	GPC 3	GPC 4	GPC 5	GPC 2	GPC 3	GPC 4	GPC 5	GPC 2	GPC 3	GPC 4	GPC 5	GPC 1	GPC 2	GPC 3	GPC 4	GPC 5
2	3	4	5	1	3	4	5	1	3	4	5	1	3	4	5	1	3	4	5	1	2	3	4	5	1
3	4	5	1	2	4	5	1	2	4	5	1	2	4	5	1	2	4	5	1	2	3	4	5	1	2
4	5	1	2	3	5	1	2	3	5	1	2	3	5	1	2	3	5	1	2	3	4	5	1	2	3
5	1	2	3	4	1	2	3	4	1	2	3	4	1	2	3	4	1	2	3	4	5	1	2	3	4

1 GPC I/O

NATIONAL AERONAUTICS AND SPACE ADMINISTRATION LYNDON B. JOHNSON SPACE CENTER HOUSTON, TEXAS		SIGNATURE	DATE
COMPUTER INPUT/OUTPUT FUNCTION		DSGN MIKE BECKER	1/31/79
		DR	
		ENGR B.F. JACKSON	
		ENGR Brad Jackson	8-22-90
		APP M.D. Conway	8/23/90
DWG NO 8.1	SPACE SHUTTLE	APP	
	ALL	OPNL PLANS K Kirstaedter	9-7-90
SHEET 1 OF 1 PAGE	126.5 X 34	LTR E	PCN

BASIC REV E

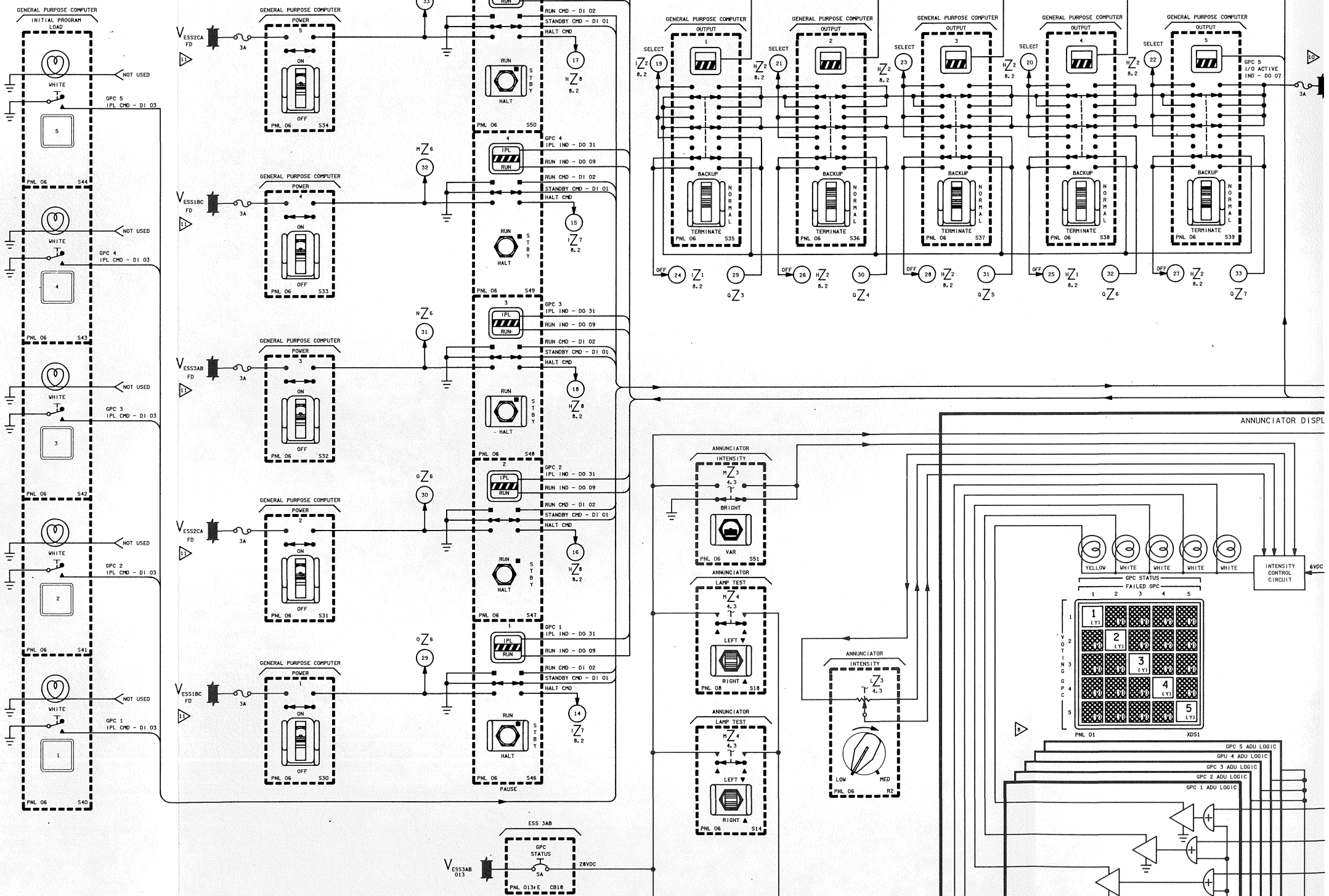

DATE: 5/5/87	NAME: MPM	VERSION INH: 3
DATE: 08/22/90	NAME: JMB	VERSION BPT: 3
DATE: 8/29/90	NAME: VSH	VERSION INH: 4

BACKUP FLIGHT CONTROLLER 3
MODULE B
MODULE A
BACKUP FLIGHT CONTROLLER 2
MODULE B
MODULE A
BACKUP FLIGHT CONTROLLER 1
MODULE B
MODULE A

BFC CRT
SELECT
1+2
2+3
3+1
PNL C3 S16

CRT 2+3 SELECTS
CRT 3+1 SELECTS
CRT 1+2 SELECTS

HAND CONTROLLER ENGAGE DRIVER
28VDC HCD
OPTICAL ISOLATOR

RIGHT RHC ENGAGE C
RIGHT RHC ENGAGE B
RIGHT RHC ENGAGE A
LEFT RHC ENGAGE C
LEFT RHC ENGAGE B
LEFT RHC ENGAGE A
RIGHT BFC ENGAGE A
LEFT BFC ENGAGE A
BFC DISENGAGE A
RIGHT BFC ENGAGE B
LEFT BFC ENGAGE B
BFC DISENGAGE B
RIGHT BFC ENGAGE C
LEFT BFC ENGAGE C
BFC DISENGAGE C
BFC GPC 3 SELECT
BFC GPC 5 SELECT
BFC GPC 2 SELECT
BFC GPC 4 SELECT
BFC GPC 1 SELECT
BFC GPC 3 SELECT OFF
BFC GPC 5 SELECT OFF
BFC GPC 2 SELECT OFF
BFC GPC 4 SELECT OFF
BFC GPC 1 SELECT OFF

$V_{CNTLAB3}$ 1A
$V_{CNTLCA3}$ 1A
BFC
DISENGAGE
PNL F6 S6

RIGHT CONTROL LOGIC
LEFT CONTROL LOGIC
S Q R Q
DELAY FILTER

5VDC POWER SUPPLY
+5 VDC
POWER UP/DOWN LOGIC
PWR OFF RESET
PWR ON INHIBIT
PWR OFF RESET DELAYED

GPC 3 HALT
GPC 5 HALT
GPC 2 HALT
GPC 4 HALT
GPC 1 HALT

CRT SELECT A
CRT SELECT B

RIGHT BFC ENG C
RIGHT BFC ENG B
RIGHT BFC ENG A
LEFT BFC ENG C
LEFT BFC ENG B
LEFT BFC ENG A

GPC 3 ENGAGE 1
GPC 5 ENGAGE 1
GPC 2 ENGAGE 1
GPC 4 ENGAGE 1
GPC 1 ENGAGE 1
GPC 3 ENGAGE 2
GPC 5 ENGAGE 2
GPC 2 ENGAGE 2
GPC 4 ENGAGE 2
GPC 1 ENGAGE 2
GPC 3 ENGAGE 3
GPC 5 ENGAGE 3
GPC 2 ENGAGE 3
GPC 4 ENGAGE 3
GPC 1 ENGAGE 3

GPC 3 TERM B
GPC 5 TERM B
GPC 2 TERM B
GPC 4 TERM B
GPC 1 TERM B

△6 EXCEPT FOR THE HCED, THE 5VDC FROM THE BFC 5VDC POWER SUPPLY IS USED TO POWER BFC LOGIC. THE HCED USES POWER FROM THE RHC

△7 FLIP-FLOP TRUTH TABLE

R	S	Q	$\overline{Q}$
0	0	NC	NC
1	0	0	1
0	1	1	0
1	1	0	1

△6 BFC CRT SELECT LOGIC

BFC CRT		DISCRETE LOGIC		DK BUSES SELECTED	
DISPLAY	SELECT	A (D138)	B (D139)	PRE-ENGAGED	ENGAGED
OFF	N/A	0	0	0	1 AND 2
ON	1 + 2	0	1	1 *	1* AND 2
ON	2 + 3	1	0	2 *	2* AND 3
ON	3 + 1	1	1	3 *	3* AND 1

* DK BUS CONTROL IS RELINQUISHED IF THE IPL SOURCE SWITCH IS IN THE MMU 1 OR MMU 2 POSITION

△5 BFS GPC ENGAGE LOGIC

GPC ENGAGE SW 1	GPC ENGAGE SW 2	GPC ENGAGE SW 3	GPC TERMINATE B	BFS ENGAGE
0	0	0	1	0
0	0	1	1	0
0	1	0	1	0
0	1	1	1	0
1	0	0	1	0
1	0	1	1	0
1	1	0	1	0
1	1	1	1	0
0	0	0	0	0
0	0	1	0	0
0	1	0	0	0
0	1	1	0	1*
1	0	0	0	0
1	0	1	0	1*
1	1	0	0	1*
1	1	1	0	1*

* ENGAGE LIGHTS ARE ON, DRIVEN BY BFS THROUGH MDM PF 2

△4 BFC LOGIC

COCKPIT SWITCH INPUTS TO BFC		BFC INPUTS TO GPC DISCRETES	
BFC DISENGAGE AND ENGAGE SWITCHES	BACKUP/NORMAL/ TERMINATE SWITCH *	I/O TERM B DISCRETE	ENGAGE 1,2,3 DISCRETES
DISENGAGE	BACKUP	1	000
DISENGAGE	NORMAL	0	000
DISENGAGE	TERMINATE	1	000
ENGAGE	BACKUP	0	111
ENGAGE	NORMAL	1	111
ENGAGE	TERMINATE	1	000

* BACKUP POSITION OUTPUTS A GPC SELECT
NORMAL POSITION OUTPUTS A GPC SELECT OFF IF NONE OF THE 5 SWITCHES ARE IN THE BACKUP POSITION
TERMINATE POSITION OUTPUTS A GPC SELECT, AND GPC SELECT OFF

△3 THE HALT DISCRETES ARE ROUTED THROUGH THE BFC TO DECREASE THE LENGTH OF WIRE TO THE GPC AND THE SUSCEPTIBILITY TO EMI

△2 ALL 5 SIGNALS ARE IMPLEMENTED WITH TWO WIRE, TRUE/COMPLEMENT LOGIC. (REF DRAWING 8.1)

NOTES: △1 PWR ON INHIBIT LATCHED TO 1, 42 MILLISECONDS AFTER POWER ON. PWR OFF RESET IS 1 WHEN 5 VOLT PWR IS GT 4.4VDC OR LT 4.5VDC, OR 28 VOLT PWR IS LT 22VDC FOR 402 MICROSECONDS AND PWR ON INHIBIT IS 1. PWR OFF RESET DELAYED LATCHED TO 0 IF PWR OFF RESET IS 1 FOR 2.5 MILLISECONDS

2 BFC

SIGNATURE		DATE	NATIONAL AERONAUTICS AND SPACE ADMINISTRATION LYNDON B. JOHNSON SPACE CENTER HOUSTON, TEXAS
DSGN LINDA DUMIS		1/16/79	
DR			
ENGR JAMES B. HILL			BACKUP FLIGHT CONTROLLER
ENGR		9/04/90	
APP M.D. Lunsford		9/7/90	
APP			SPACE SHUTTLE DWG NO 8.2
OMNIPLAN S.K. Kimbrell		9-7-90	ALL
LTR E	PCN		66 X 34 PAGE SHEET 1 OF 1

BASIC REV E

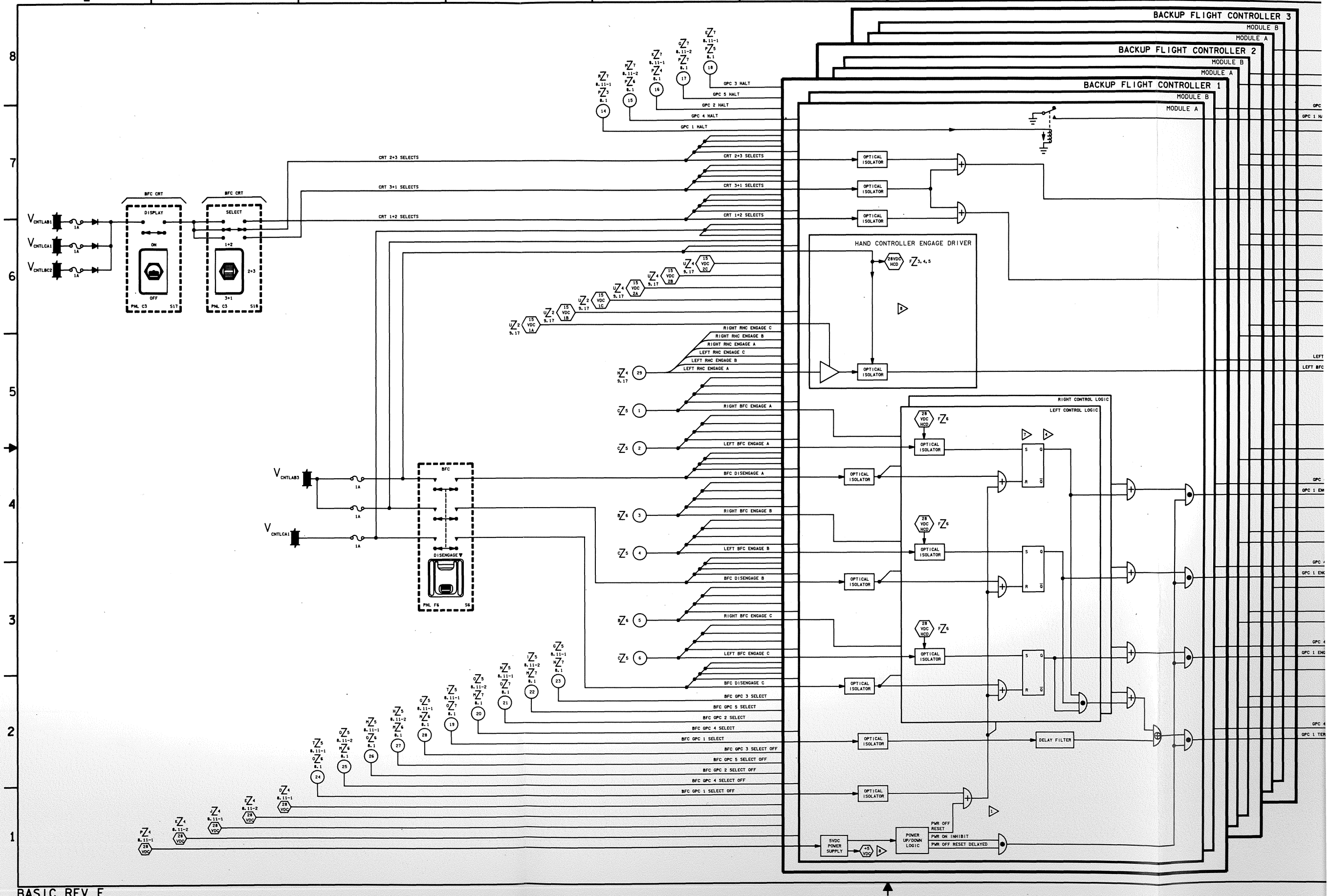
BACKUP FLIGHT CONTROLLER 3
MODULE B
MODULE A
BACKUP FLIGHT CONTROLLER 2
MODULE B
MODULE A
BACKUP FLIGHT CONTROLLER 1
MODULE B
MODULE A
GPC 3 HALT
GPC 5 HALT
GPC 2 HALT
GPC 4 HALT
GPC 1 HALT
CRT 2+3 SELECTS
CRT 3+1 SELECTS
CRT 1+2 SELECTS
BFC CRT
DISPLAY
ON
OFF
PNL C3
S17
BFC CRT
SELECT
1+2
2+3
3+1
PNL C3
S18
V CNTLAB1
V CNTLCA1
V CNTLBC2
1A
OPTICAL ISOLATOR
HAND CONTROLLER ENGAGE DRIVER
28VDC HCD
15 VDC 1A
15 VDC 1B
15 VDC 1C
15 VDC 2A
15 VDC 2B
15 VDC 2C
RIGHT RHC ENGAGE C
RIGHT RHC ENGAGE B
RIGHT RHC ENGAGE A
LEFT RHC ENGAGE C
LEFT RHC ENGAGE B
LEFT RHC ENGAGE A
RIGHT BFC ENGAGE A
LEFT BFC ENGAGE A
BFC DISENGAGE A
RIGHT BFC ENGAGE B
LEFT BFC ENGAGE B
BFC DISENGAGE B
RIGHT BFC ENGAGE C
LEFT BFC ENGAGE C
BFC DISENGAGE C
BFC GPC 3 SELECT
BFC GPC 5 SELECT
BFC GPC 2 SELECT
BFC GPC 4 SELECT
BFC GPC 1 SELECT
BFC GPC 3 SELECT OFF
BFC GPC 5 SELECT OFF
BFC GPC 2 SELECT OFF
BFC GPC 4 SELECT OFF
BFC GPC 1 SELECT OFF
V CNTLAB3
V CNTLCA1
BFC
DISENGAGE
PNL F6
S6
RIGHT CONTROL LOGIC
LEFT CONTROL LOGIC
28 VDC HCD
DELAY FILTER
5VDC POWER SUPPLY
+5 VDC
POWER UP/DOWN LOGIC
PWR OFF RESET
PWR ON INHIBIT
PWR OFF RESET DELAYED
28 VDC

BASIC REV E

DATE: 08/18/87	NAME: VCO	VERSION: INK 2
DATE: 09/22/87	NAME: MDU	VERSION: INK 3
DATE: 8/17/90	NAME: VSH	VERSION: INK 4

CONTROL MONITOR

MICRO STORE — NO GO

MICRO STORE (TO MSC INSTRUCTION SET)

MICRO STORE (TO BCE INSTRUCTION SET)

MICRO STORE — WAIT

MICRO STORE — BUSY (FROM MSC INSTRUCTION SET)

LOCAL STORE

FROM REG 4

FROM REG 5

FROM REG 6

BANK A INPUT MUX

BANK B INPUT MUX

BANK C INPUT MUX

MUX

CURRENT PROCESS

MSC	BANK A WR	BANK B WR	BANK C WR
	WR	WR	WR
	PROG CNTR	INSTR HI	INSTR LO
	INDEX REG	ACCUM HI	ACCUM LO
			WR
			WR
			EXT CALL REG
			STATUS 13

BCE 1	BANK A WR	BANK B DATA HI	BANK C DATA LO
	WR	WR	WR
	PROG CNTR	INSTR HI	INSTR LO
	IDENT REG	MAX TIME OUT	BASE REG
			WR
			IUA REG
			STATUS HI 13
			STATUS LO

BCE 24	BANK A WR	BANK B WR	BANK C WR
			WR
			INSTR LO
			BASE REG
			WR
			IUA REG
			STATUS HI
			STATUS LO

LOCAL STORE OUTPUT MUX

PROCESSOR (DATA FLOW) 7

REGISTER 1

REGISTER 2

REGISTER 3

REGISTER 4 — TO BANK A

REGISTER 5 — TO BANK B

REGISTER 6 — TO BANK C

ALU 1

ALU 2

BCE'S C5 — INVALID ADDRESS (TO BCE'S BANK C STATUS HIGH)

IUA

CONTROL SIGNALS

ERROR DETECTOR — PARITY, SEV SYNC (TO BCE'S BANK C STATUS HIGH)

MUX — TO DMA MAIN ADDRESS

MUX — TO DMA DATA HIGH

MUX — TO DMA DATA LOW

DIRECT MEMORY ACCESS 8

DMA RESET 31

PROCESS ID 64

LOCAL STORE ADDRESS 7 BITS

BANK AND WORD 1

QUEUE CONTROL 4 BITS

CONTROL

DATA LOW 16 BITS

DATA HIGH 16 BITS

MAIN MEMORY ADDRESS 18 BITS

TIME SLICE

LAST PROCESS

CURRENT PROCESS

NEXT PROCESS

TWO AHEAD PROC

BCE 24, SPARE, MSC, BCE 1, BCE 2, BCE 3, MSC, BCE 4, BCE 5, BCE 6, MSC, BCE 7

TOTAL OF 33 TIME SLICES

ADVANCE EVERY .5 M SEC

÷ 8

CLOCK 6

TIME SLICES

MICROPROGRAM CONTROL UNIT

ROS MICRO-STORE 1536 X 72 BITS

ROS M-INSTRUCTION REGISTER: 0 TO 6 | 7 TO 22 | 23 TO 35 | 36 TO 54 | 55 TO 58 | 59 TO 70 | 71 PARITY BIT

MICRO-PROGRAM CONTROL LOGIC

R1,R2,R3 FLOW CONTROL SIGNALS

R4,R5,R6 FLOW CONTROL SIGNALS

MISCL ACTION CONTROL SIGNALS

PARITY CHECK LOGIC — ROS PARITY INTERRUPT 3

ROSAR 11 BITS

ALU CONTROL LOGIC — IPL COMP 40, 32; CONTROL SIGNALS

CONDITIONAL BRANCHING AND ACTION 37 — CONTROL SIGNALS

FORCED ADDRESS

SIMULTANEOUS READ/WRITE MICROPROGRAM COUNTER FILE 26 X 11 BITS

INCREMENT ROSAR BY 1

INC'D ROSAR

STORED ROSAR

NEXT MICROPROGRAM ADDRESS LOGIC — EMIT

RESET 30

NEW INSTRUCTIONS 4

μPC ADDRESS 18

CLOCK

16 MHZ OSCILLATOR 30

TIMING STOP DETECTOR 16

IOP

MIA GROUP 6

MIA GROUP 2

MIA GROUP 1 (TYPICAL 1 OF 6)

MIA NO 4

MIA NO 3

MIA NO 2

MIA NO 1 (TYPICAL) (1 OF 24)

TRANSMITTER ENABLE

DATA AVAILABLE

COMMAND

24 BIT DATA REGISTER

SYNC GENERATOR

MANCHESTER CONVERTER

SERIAL FLOW

TRANSMIT TIMING GENERATOR

PARITY GENERATOR

MIA BUSY

FOUR 28 BIT REGISTERS MIA BUFFERS

CLOCK — FREQUENCY DIVIDER — 8 MHZ, 4 MHZ, 2 MHZ, 1 MHZ, 16 MHZ

MIA GO/NO GO

MIA DATA READY

MIA COMMAND

MIA PARITY ERROR

RECEIVER ENABLE

MANCHESTER DECODER

SYNC DETECT

BIT COUNT CHECK

PARITY CHECK

INHIBIT

DBC

---

13 THIS BLOCK DIAGRAM IS INDEXED TO THE PRODUCTION AUTOMATED LOGIC DIAGRAMS (ALD'S) VIA THE FIVE-CHARACTER CODES (ALD PAGE NUMBERS) THAT APPEAR THROUGHOUT THE DIAGRAM

14 DELETED

15 DELETED

16 TIMER AND VOTER LATCHES ARE PERMANENTLY INHIBITED BY CURRENT FLIGHT SOFTWARE

17 DELETED

18 THIS +5 VOLTS IS USED TO DRIVE THE LOGIC CIRCUITS IN THE POWER SUPPLIES

19 BCE STATUS REGISTER (HI AND LO)

TERMINAL MISMATCH; PARITY; SYNC ERROR; SP; TERMINAL ADDRESS; SP; S 4; S 5; E 6; V 7; 0 1 2 3 8 9 10 11 12 13 14 15 16

SELF TEST ERROR; SPARE; BCE INSTRUCTION ERROR; SPARES; SPARE; 16 17 18 19 20 21 22 23 24 25 26 27 28 29 30 31; TRANSMIT GAP; ILLEGAL OP-CODE; BCE INSTRUCTION TIME-OUT; DATA WORD TIME-OUT; INITIAL TIME-OUT; TRANSMITTER DISABLED

20 MSC STATUS REGISTER

MSC SELF TEST ERR; PROGRAM EXCEPTION; BUSY/WAIT; SPARES; SPARES MSC INSTRUCTION ERROR; 0 1 2 3 4 5 6 7 8 9 10 11 12 13 14 15 16 17

21 FOR INPUT ORIGINATION AND OUTPUT DESTINATION SEE DRAWING 8.1 NOTE 1

22 THE 44 DISCRETE-INPUT CIRCUITS ARE GROUPED IN SETS OF 4, EACH SET HAS A COMMON 5VDC, 12VDC POWER LINE AND A COMMON GROUND. THE DI'S ARE CONTROLLED BY DISCRETE OUTPUT CIRCUITS, SWITCHES, OR DISCRETES FROM LRU'S. FOR DETAILS OF THE DISCRETE RECEIVER AND DRIVER SEE ROCKWELL DRAWING VS70-T20229 ZONE C-24

23 THE OUTPUT OF DO 30 IS PERMANENTLY SET TO A 1 AND THEN CONNECTED TO DI'S 32, 33,34 IN A SPECIFIC PATTERN (SEE NOTE 3, DWG 8.1 FOR PATTERN DEFINITION). OTHER DO'S ARE CONTROLLED BY HARDWARE OR SOFTWARE

24 THE DIRECT MEMORY ACCESS (DMA) PROVIDES A BUFFER AREA FOR COMMUNICATION WITH MAIN MEMORY VIA CHANNEL CONTROL AND IS UNDER CONTROL OF THE MSC AND BCE'S VIA THE MICROPROGRAM LOGIC. IT OPERATES IN TWO MODES: READ, AND WRITE. THE WRITE MODE INVOLVES NO FEEDBACK TO LOCAL STORE. THE READ MODE DOES INVOLVE FEEDBACK TO LOCAL STORE (SO THAT THE DATA GOES TO THE CORRECT LOCATION)

25 THIS FLOW PERFORMS TWO DISTINCT FUNCTIONS. IT PROVIDES A MEANS OF SENDING DATA TO THE MAIN MEMORY, TO PERIPHERAL EQUIPMENT (VIA MIA'S), OR TO LOCAL STORE. THE OTHER FUNCTION IS TO PROVIDE LOGIC PROCESSING REGISTERS FOR THE MSC AND BCE PROCESSORS

26 THESE VOTES ARE OUTPUT WHEN THE MASTER SEQUENCE CONTROLLER (MSC) EXECUTES THE FCMSVOTE PROGRAM. FCDS (VIA THE FCM FDI MODULE) DIRECTS THE MSC TO EXECUTE FCMSVOTE WHEN IT DETERMINES THAT ANOTHER COMPUTER IN ITS REDUNDANT SET IS FAILED

27 THIS INPUT IS FURNISHED BY IPL FIRMWARE WHEN LOADING AND CHECKING OF THE BOOTSTRAP LOADER IS COMPLETE AND NO ERRORS WERE DETECTED. THIS FIRMWARE IS PART OF THE MICROSTORE AND TIMING ROS MICROPROGRAM

28 DELETED

29 DI 12 I/O TERM A1 IS NOT CONNECTED EXTERNALLY, INTERNALLY IT IS CONNECTED SO THAT IT WILL DISABLE TX'S 10-13

30 MASTER/POWER RESET SELECTIVE BY RESETS ONLY. ROS PARITY ERROR AND IOP TIMING FAULT IN INTERRUPT A

NOTES: 1 OF 5

3 I/O PROC 1

SIGNATURE	DATE	
DSGN	6/17/78	NATIONAL AERONAUTICS AND SPACE ADMINISTRATION LYNDON B. JOHNSON SPACE CENTER HOUSTON, TEXAS
DR K CHARLSON	2-27-79	
ENGR B.F. JACKSON		INPUT/OUTPUT PROCESSOR
ENGR	8-23-90	
APP	8/23/90	
APP	SPACE SHUTTLE	DWG NO 8.3
OMNIPLAN	ALL	
LTR E PCN	126.5 X 34	PAGE SHEET 1 OF 1

BASIC REV E

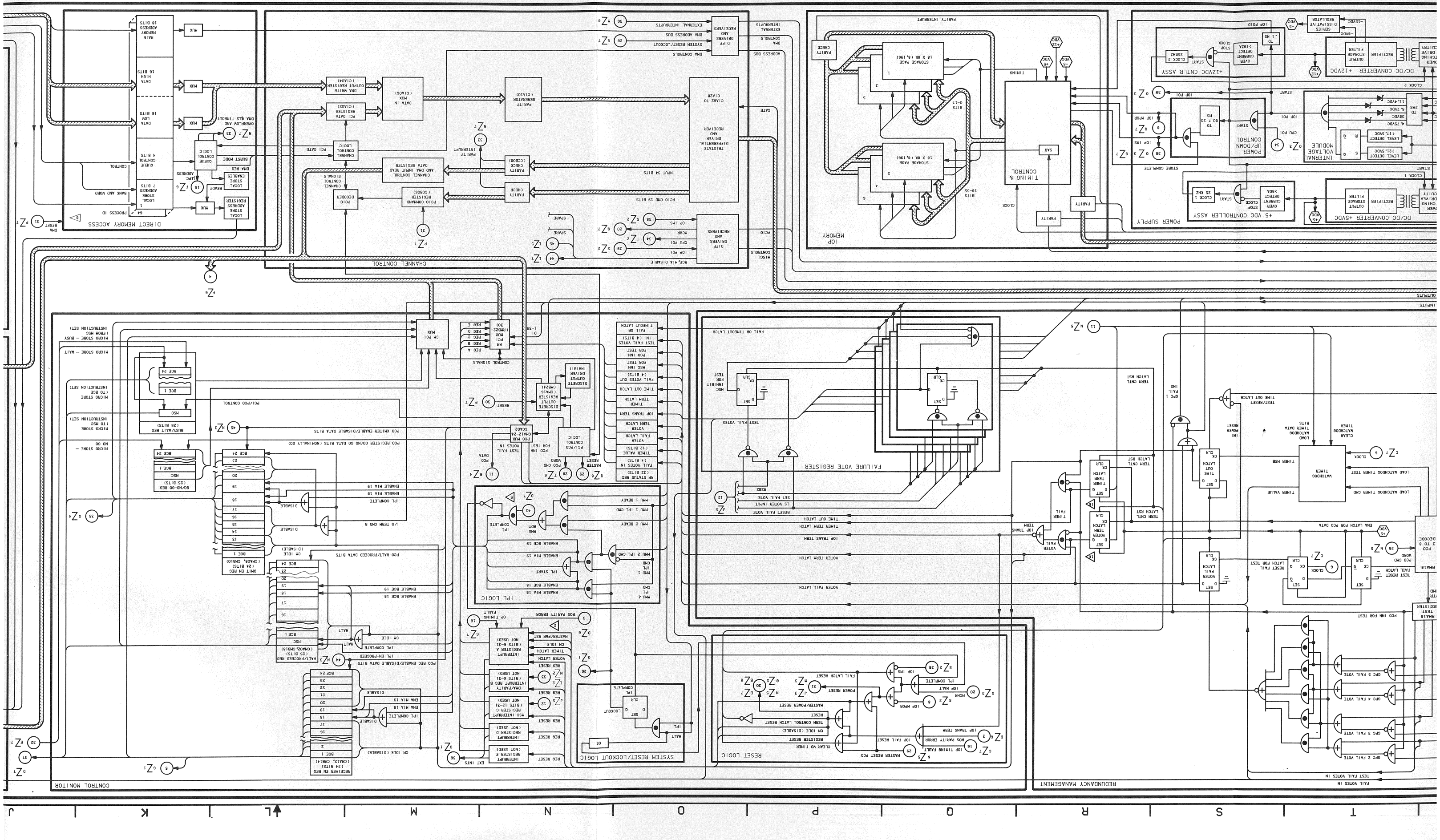
DIRECT MEMORY ACCESS
CHANNEL CONTROL
IOP MEMORY
POWER SUPPLY
DC/DC CONVERTER +5VDC
DC/DC CONVERTER +12VDC
+5 VDC CONTROLLER ASSY
+12VDC CNTLR ASSY
INTERNAL VOLTAGE MODULE
POWER UP/DOWN CONTROL
TIMING & CONTROL
IOP MEMORY
STORAGE PAGE 18 X 8K (8,196)
DATA IN MUX (CIA06)
CHANNEL CONTROL LOGIC
QUEUE CONTROL LOGIC
LOCAL STORE ADDRESS REGISTER
MAIN MEMORY ADDRESS 16 BITS
DATA HIGH 16 BITS
DATA LOW 16 BITS
QUEUE CONTROL 4 BITS
BANK AND WORD 7 BITS
64 PROCESS IO
PARITY CHECK
PARITY GENERATION (CIA10)
TRISTATE DIFFERENTIAL DRIVER AND RECEIVER
DIFF DRIVERS AND RECEIVERS
INPUT 34 BITS
PCIO CMD 19 BITS
IOP IMS
IOP PO1
CPU PO1
MCHR
IOP PMOR
IOP PO10
IOP PO9R
IOP IMS
IOP PO8
IOP PO7
IOP PO6
IOP PO5
IOP PO4
IOP PO3
IOP PO2
IOP PO1
IOP PO0
STORE COMPLETE
START
CLOCK 1
CLOCK 2
CPU PO1
TIMING
CLOCK
PARITY
SAR
BITS 0-17
BITS 18-35
IOP PARITY INTERRUPT
PARITY CHECK
DMA CONTROLS
ADDRESS BUS
EXTERNAL INTERRUPTS
SYSTEM RESET/LOCKOUT
DMA ADDRESS BUS
EXTERNAL
DMA WRITE OUTPUT REGISTER (CIA04)
PCI DATA REGISTER (CIA02)
OVERFLOW AND DMA QLS TIMEOUT
DMA REQ
QUEUE CONTROL LOGIC
BURST MODE
LOCAL STORES ENABLES
LOCAL STORE ADDRESS REGISTER
READY
ADDRESS
PCIO DECODER
CHANNEL CONTROL SIGNALS
CHANNEL CONTROL AND DMA INPUT READ DATA REGISTER
PCIO COMMAND REGISTER (CCB06)
PARITY CHECK (CCB08)
PARITY INTERRUPT
PCI GATE
DMA QLS TIMEOUT
SPARE
IOP IMS
MCHR
CPU PO1
IOP PO1
BDC, MIA DISABLE
MISC CONTROLS
PCIO
GATE
DMA CONTROLS
INTERNAL INTERRUPTS
ADDRESS BUS
DMA CONTROLS
INPUTS
OUTPUTS
STORAGE PAGE 18 X 8K (8,196)
BITS 18-35
CLOCK
PARITY
PARITY CHECK
PARITY INTERRUPT
TIMING & CONTROL
SAR
BITS 0-17
STORAGE PAGE 18 X 8K (8,196)
IOP MEMORY
+5VDC
+12VDC
-15VDC
-8VDC
SERIES DISSIPATIVE REGULATOR
RECTIFIER
OUTPUT STORAGE FILTER
DC/DC CONVERTER +5VDC
DC/DC CONVERTER +12VDC
+12VDC CNTLR ASSY
START
STOP
CLOCK 2
25KHZ
OVER CURRENT DETECT
STOP CLOCK
TO .1 MS
IOP PO10
IOP PO9
IOP PO8
IOP PO7
IOP PO6
IOP PO5
IOP PO4
IOP PO3
IOP PO2
IOP PO1
IOP PO0
IOP IMS
STORE COMPLETE
START
CLOCK 1
CLOCK 2
CPU PO1
TIMING
CLOCK
PARITY
SAR
BITS 0-17
BITS 18-35
STORAGE PAGE 18 X 8K (8,196)
STORAGE PAGE 18 X 8K (8,196)
IOP MEMORY
PARITY CHECK
PARITY INTERRUPT
DMA CONTROLS
ADDRESS BUS
EXTERNAL INTERRUPTS
SYSTEM RESET/LOCKOUT
DMA ADDRESS BUS
EXTERNAL
DIFF DRIVERS AND RECEIVERS
TRISTATE DIFFERENTIAL DRIVER AND RECEIVER
CIA28 TO
PARITY (CIA10)
PARITY GENERATION
DATA IN MUX (CIA06)
OUTPUT REGISTER (CIA04)
PCI DATA REGISTER (CIA02)
DMA WRITE
MUX
MAIN MEMORY ADDRESS 16 BITS
DATA HIGH 16 BITS
DATA LOW 16 BITS
QUEUE CONTROL 4 BITS
BANK AND WORD 7 BITS
64 PROCESS IO
DMA RESET
B
DIRECT MEMORY ACCESS
LOCAL STORE ADDRESS REGISTER
LOCAL STORES ENABLES
DMA REQ
BURST MODE
QUEUE CONTROL LOGIC
ADDRESS
READY
OVERFLOW AND DMA QLS TIMEOUT
CHANNEL CONTROL
PCIO DECODER
CHANNEL CONTROL SIGNALS
CHANNEL CONTROL AND DMA INPUT READ DATA REGISTER
PCIO COMMAND REGISTER (CCB06)
PARITY CHECK (CCB08)
PARITY INTERRUPT
PCI GATE
SPARE
SPARE
IOP IMS
MCHR
CPU PO1
IOP PO1
BDC, MIA DISABLE
MISC CONTROLS
PCIO
GATE
DMA CONTROLS
INTERNAL INTERRUPTS
ADDRESS BUS
DMA CONTROLS
INPUTS
OUTPUTS
CHANNEL CONTROL
MICRO STORE — WAIT
MICRO STORE (FROM MSC INSTRUCTION SET)
MICRO STORE (TO BDC INSTRUCTION SET)
MICRO STORE (TO MSC INSTRUCTION SET)
MICRO STORE — NO GO
BDC 24
BDC 1
MSC
BUSY/WAIT REG (25 BITS)
DO-NO-GO REG (25 BITS)
PCI/PCO CONTROL
PCO XMITTER ENABLE/DISABLE DATA BITS
PCO REGISTER GO/NO GO DATA BITS (NORMALLY GO)
ENABLE MIA 19
ENABLE MIA 18
IPL COMPLETE
I/O TERM CMD 0
DISABLE
CM IDLE (DISABLE)
PCO HALT/PROCEED DATA BITS
XMIT EN REG (24 BITS) (CMA08, CMB10)
ENABLE BDC 19
ENABLE BDC 18
HALT
CM IDLE
HALT/PROCEED REG (25 BITS) (CMA02, CMB10)
IPL COMPLETE
IPL EN-PROCEED
PCO REC ENABLE/DISABLE DATA BITS
RECEIVER EN REG (24 BITS) (CMA12, CMB14)
CM IDLE (DISABLE)
CM PCI MUX
REG A
REG B
REG D
REG E
RM PCI MUX (MB02-30)
D1 1-39
CONTROL SIGNALS
DISCRETE OUTPUT REGISTER (CMA16 CMB24)
PCI/PCO CONTROL LOGIC
PCO REGISTER CMA02-24 CCA02
PCO INH FOR TEST
PCO CMD WORD
RESET
TEST FAIL VOTES IN
PCO DATA
EXT INTS
INTERRUPT REGISTER A (BITS 6-31 NOT USED)
INTERRUPT REGISTER B (BITS 6-31 NOT USED)
DMA/PARITY INTERRUPT REG B (BITS 6-31 NOT USED)
MSC INTERRUPT REGISTER C (BITS 12-31 NOT USED)
INTERRUPT REGISTER D (NOT USED)
INTERRUPT REGISTER E (NOT USED)
REG RESET
IPL LOGIC
MPU 1 READY
MPU 1 IPL CMD
MPU 2 READY
MPU 2 IPL CMD
MPU 1 IPL CMD
MPU 2 IPL CMD
MPU 1 IPL START
ENABLE MIA 19
ENABLE BDC 19
ENABLE MIA 18
ENABLE BDC 18
ROS PARITY ERROR
IOP TIMING FAULT
MASTER/PWR RST
INTERRUPT REGISTER A (BITS 6-31 NOT USED)
TIMER LATCH
CM IDLE
VOTER LATCH
REG RESET
DMA/PARITY INTERRUPT REG B (BITS 6-31 NOT USED)
MSC INTERRUPT REGISTER C (BITS 12-31 NOT USED)
INTERRUPT REGISTER D (NOT USED)
INTERRUPT REGISTER E (NOT USED)
REG RESET
SYSTEM RESET/LOCKOUT LOGIC
IPL COMPLETE
SET
CLR
LOCKOUT
HALT
IPL
FAIL OR TIMEOUT LATCH
FAIL OR TIMEOUT LATCH
TEST FAIL VOTES
TEST FAIL VOTES IN
TEST FAIL VOTES OUT
MSC INH FOR TEST
PCO INH FOR TEST
FAIL VOTES OUT (4 BITS)
TIME OUT LATCH
TIMER LATCH
IOP TRANS TERM
VOTER LATCH
FAIL VOTES IN (4 BITS)
TIMER VALUE (12 BITS)
PR STATUS REG (32 BITS)
MASTER
RESET
PCO CMD WORD
PCI/PCO CONTROL LOGIC
DISCRETE OUTPUT REGISTER (CMA16 CMB24)
DISCRETE OUTPUT DRIVER INH/BIT
FAILURE VOTE REGISTER
RESET FAIL VOTE
LS VOTER INPUT
SET FAIL VOTE
TIMER FAIL
TIMER TERM LATCH
TIME OUT LATCH
IOP TRANS TERM
VOTER FAIL LATCH
VOTER TERM LATCH
IOP TRANS TERM
VOTER FAIL
TERM CONTROL LATCH RESET
TERM CNTL LATCH RST
TERM CNTL LATCH RST
TERM CNTL
TIMER RST
LATCH RST
TIMER MSB
TIMER VALUE
WATCHDOG
LOAD WATCHDOG TIMER CMD
LOAD WATCHDOG TIMER TEST
CLEAR WATCHDOG TIMER DATA BITS
TEST/RESET TIME OUT LATCH
IMS POWER RESET
OPC 1 FAIL IND
EXA LATCH FOR PCO DATA
PCO 3 TO 8 DECODER
PCO CMD WORD
RESET FAIL LATCH FOR TEST
TEST RESET FAIL LATCH
TEST REGISTER
PCO INH FOR TEST
OPC 5 FAIL VOTE
OPC 4 FAIL VOTE
OPC 3 FAIL VOTE
OPC 2 FAIL VOTE
FAIL VOTES IN
TEST FAIL VOTES IN
CLOCK
RESET
SET
CLR
CONTROL MONITOR
REDUNDANCY MANAGEMENT
RESET LOGIC
CLEAR WD TIMER
REGISTER RESET
TERM CONTROL LATCH RESET
CM IDLE (DISABLE)
IOP TRANS TERM
IOP FAIL RESET
IOP TIMING FAULT
ROS PARITY ERROR
MASTER RESET PCO
POWER RESET
FAIL LATCH RESET
IOP IMS
IOP IPL COMPLETE
IOP MCHR
IOP MPOR
MSC INH FOR TEST
TEST FAIL VOTES
FAIL VOTES OUT (4 BITS)
FAIL OR TIMEOUT LATCH
IOP TRANS TERM
IOP PARITY ERROR
IOP TIMING FAULT
IOP IMS
IOP IPL COMPLETE
IOP MCHR
IOP MPOR
IOP PO10
IOP PO9R

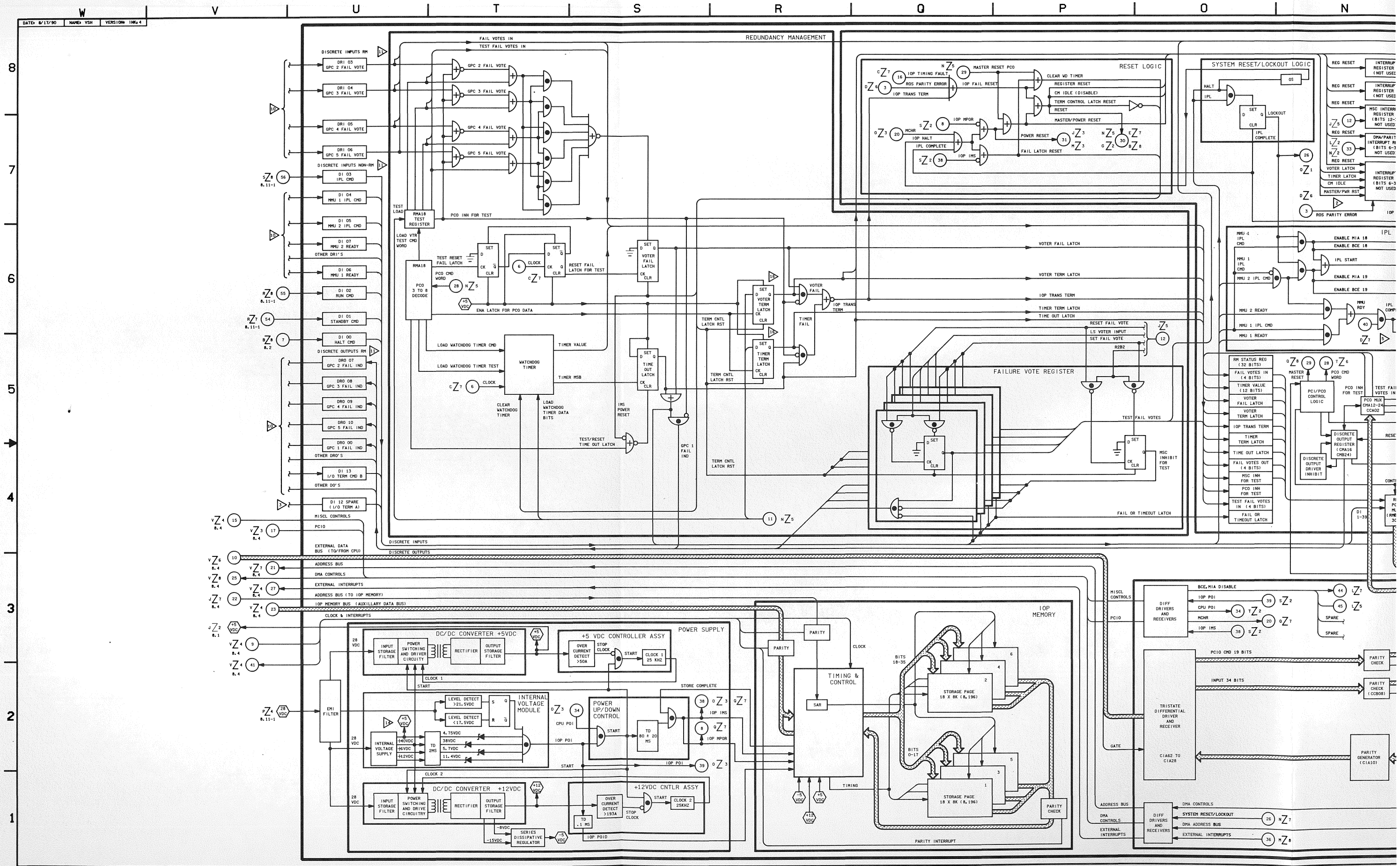

DATE: 8/17/90
NAME: VSH
VERSION: INK 4
REDUNDANCY MANAGEMENT
RESET LOGIC
SYSTEM RESET/LOCKOUT LOGIC
FAILURE VOTE REGISTER
POWER SUPPLY
DC/DC CONVERTER +5VDC
+5 VDC CONTROLLER ASSY
INTERNAL VOLTAGE MODULE
POWER UP/DOWN CONTROL
DC/DC CONVERTER +12VDC
+12VDC CNTLR ASSY
IOP MEMORY
TIMING & CONTROL
STORAGE PAGE 18 X 8K (8,196)
DIFF DRIVERS AND RECEIVERS
TRISTATE DIFFERENTIAL DRIVER AND RECEIVER
PARITY GENERATOR (CIA10)
PARITY CHECK
PARITY INTERRUPT

BASIC REV E

DATE	NAME	VERSION
DATE= 08/18/87	NAME= CAR	VERSION= INK= 1
DATE= 09/10/87	NAME= MDU	VERSION= INK= 2
DATE= 8/15/90	NAME= VSH	VERSION= INK= 3

CENTRAL PROCESSING UNIT (CPU)

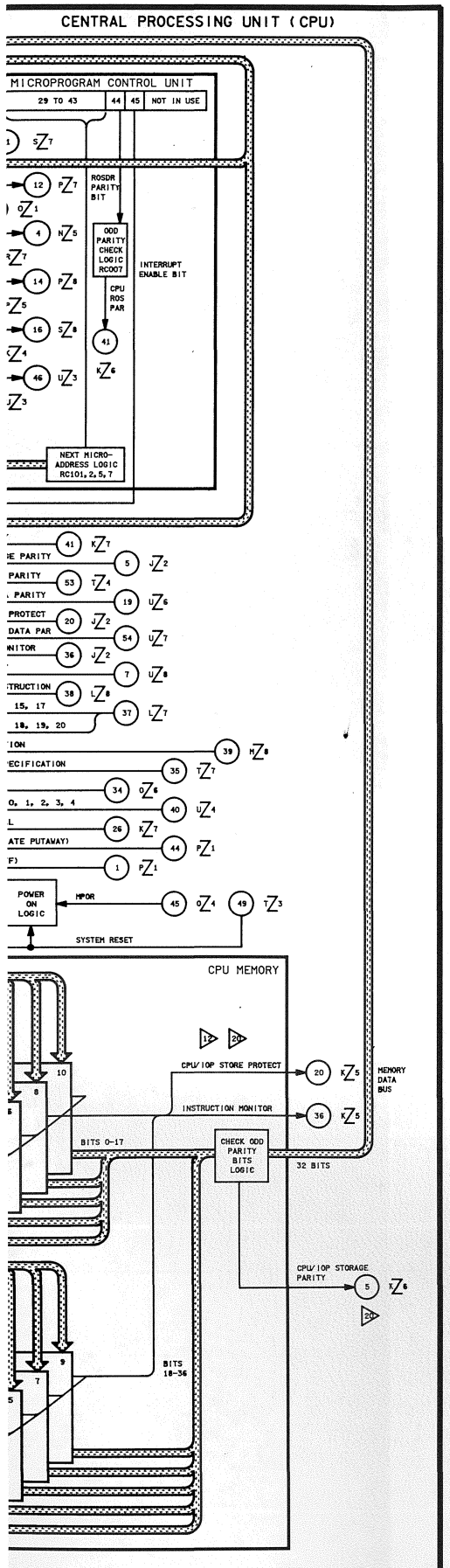

PROGRAM STATUS WORD (PSW) [1]

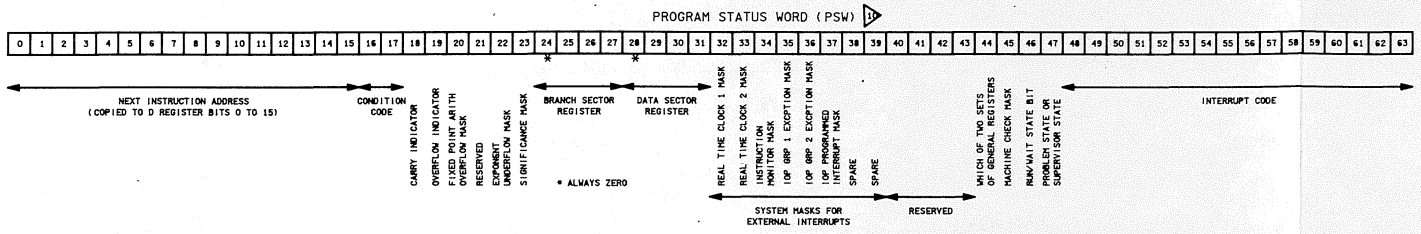

INSTRUCTION STORAGE IN CPU REGISTER

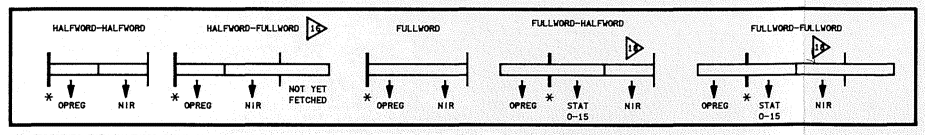

* REPRESENTS EVEN HALFWORD BOUNDARY IN MEMORY. INSTRUCTION FETCH INVOLVES ENTIRE FULLWORD.

CPU INTERRUPTS

NO	HARDWARE PRIORITY	INTERRUPT NAME	TYPE	CURRENT PSW MASK BIT	PENDING IF MASKED	INTERRUPT CODE (HEX)	RECOVERY INSTRUCTION	WHEN ACCEPTED	SOFTWARE HALT	ZONE	NO
		POWER CLASS									
1	1	POWER ON (CPU NOT IN HALT)	1	NONE	N/A	N/A	NONE	1	YES	P2	1
2	1	SYSTEM RESET (CPU IN HALT)	1				NONE	1	N/A	T3	2
3	1	POWER OFF (POID)	1				NONE	6	N/A	Q1	3
22	12	INITIATE PUTAWAY (PQI)	2				NEXT	6	YES	Q2	22
		CPU BITE (MACHINE CHECK) CLASS									
4	2	CPU STORAGE DATA PARITY *	1	45	NO	0003	IMPRECISE	2	YES	U2	4
5	3	IOP STORAGE DATA PARITY *	1			0002		2			5
6	4	EXTENDED STORAGE ADDRESS PARITY *	1			0001		2		T4	6
7	5	EXTENDED STORAGE DATA PARITY *	1			0004		2		U6	7
10	8	CPU ROS PARITY *	1			0005		1		K7	10
		MICROPROGRAM CLASS									
8	6	CPU ADDRESS SPECIFICATION	1	NONE	NO	0003	IMPRECISE	1	NO	T7	8
9	7	CPU STORE PROTECT VIOLATION *	1	NONE		N/A		2		J4	9
11	9	INSTRUCTION MONITOR	1	34		N/A		4		J4	11
12	10	ILLEGAL OPERATION	3	NONE		0000		4		M8	12
13	10	PRIVILEGED INSTRUCTION	3	NONE		0001		3		M8	13
14	10	FIXED POINT OVERFLOW	1	20		0004					14
15	10	SIGNIFICANCE	1	23		0005					15
16	10	EXPONENT UNDERFLOW (FLOATING)	3	22		0009	NEXT	5		LT	16
17	10	EXPONENT OVERFLOW (CONVERT)	3	NONE		0004					17
18	10	EXPONENT OVERFLOW (FLOATING)	3	NONE		000B					18
19	10	DIVIDE (FLOATING)	3	NONE		000C					19
20	10	UNNORMALIZED INPUTS	3	NONE		0006					20
		SUPERVISOR AND SYSTEM CLASS									
21	11	EXECUTIVE (SUPERVISOR CALL)	3	NONE	N/A	N/A	NEXT	3	NO	K7	21
23	13	COUNTER 1	2	32		N/A				O6	23
24	14	COUNTER 2	2	33		N/A				O6	24
25	15	EXTERNAL 0	2	35		N/A				U4	25
26	16	EXTERNAL 1	2	36		N/A				U4	26
27	16	I/O ADDRESS SPECIFICATION	4	45	YES	0003	NEXT	6	YES	T7	27
28	16	I/O STORE PROTECT VIOLATION	4			0004				J4	28
29	16	I/O WRITE PARITY	4			0002				U7	29
30	16	PCI DATA PARITY	4			0001				U7	30
31	16	I/O ADDRESS PARITY	4			0005				U8	31
32	16	AGE INTERRUPT	2	36		0006					32
33	17	EXTERNAL 2	2	37		N/A	NEXT		NO	U4	33
34	18	EXTERNAL 3	2	38		N/A			NO		34
35	19	EXTERNAL 4	2	39		N/A			NO		35

TYPE= 1 MICRO INTERRUPT IN HARDWARE
2 MACRO INTERRUPT IN HARDWARE
3 MICRO PROGRAMMED INTERRUPT
4 IOP INTERRUPTS DETECTED BY CPU

* THESE INTERRUPTS MUST BE ENABLED BY SETTING ROSDR BIT 45 = 1. THEY CAN STILL BE MASKED

WHEN ACCEPTED
1 IMMEDIATELY
2 END OF MEMORY CYCLE
3 DURING ADDRESS GENERATION
4 DURING INSTRUCTION FETCH
5 DURING INSTRUCTION EXECUTION
6 AT END OF INSTRUCTION

TYPICAL STORAGE PAGE (1 OF 10)

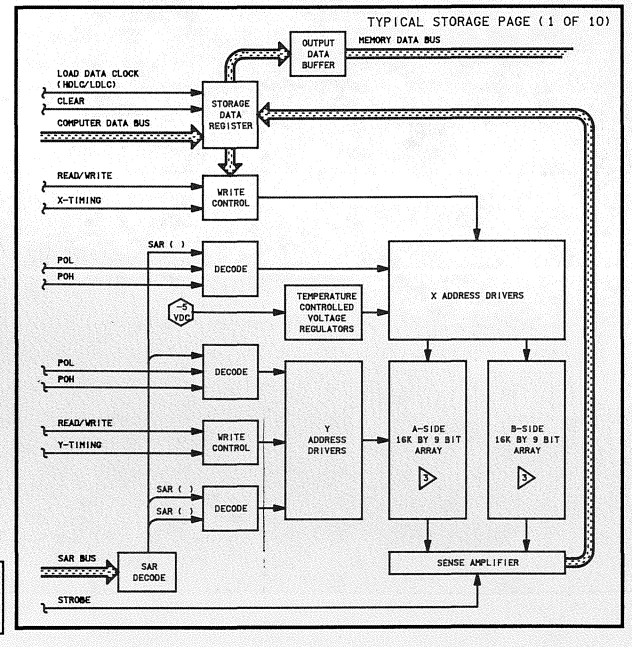

MEMORY SECTOR POWER STATUS

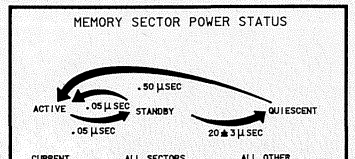

CURRENT ACCESSIBLE SECTOR	ALL SECTORS ADDRESSED WITHIN 20 ± 3 µSEC	ALL OTHER SECTORS
50.8 WATTS	19.2 WATTS/SECTOR	2.4 WATTS/SECTOR

(PLUS 5.9 WATTS FOR ONE TIMING PAGE)

SAR BIT DEFINITIONS	
M2	64K BOUNDARY
M1	32K BOUNDARY
0	16K BOUNDARY
ADDRESS SELECTION	
2, 3, 5, 6, 12, 14	X
1, 4, 7, 8, 9, 10, 11, 13	Y
15	HALFWORD SELECTION
CO	HW/FW MODE SEL

STATUS REGISTER

00	A REG SIGN BIT	
01		
02	EXPONENT COUNTER	USED FOR HANDLING THE CHARACTERISTIC IN FLOATING POINT OPERATIONS. STATUS REG 24 IS THE HIGH BIT OF THIS COUNTER AND IS USED TO DETECT CHARACTERISTIC OVERFLOWS (OF) AND UNDERFLOWS (UF)
03		
04		
05		
06		
07		
08	ITERATION COUNTER	USED BY MICRO-CODE TO PERFORM MICRO BRANCH ON COUNT OPERATIONS
09		
10		
11		
12	SPILL STATUS BITS	USED BY SHIFT MICRO OPERATIONS TO PRODUCE TEMPORARY STORAGE FOR SPILLED BITS
13		
14		
15		
16	ENABLES STORE PROTECT LOGIC WHEN A ONE	
17	STORE PROTECT BIT GENERATOR (ONLY IF ENABLED BY STAT 16)	
18	PERFORMING DETECT MICRO ROUTINE WHEN A ONE	
19	ALWAYS A ZERO	
20	INTERRUPT IN PROGRESS (USED BY INTERRUPT HANDLING MICRO ROUTINES)	
21	SYSTEM RESET REGISTER	
22	FAILURE INDICATOR REGISTER	
23	RESERVED FOR I/O OPERATIONS (NOT USED)	
24	EXPONENT OF/UF REGISTER (SEE DESCRIPTION UNDER STATS 1-7)	
25	B REGISTER SIGN	
26	ALU OUTPUT SIGN	
27	ALU OUTPUT 32-BIT ZERO DETECT	
28	FIXED POINT OVERFLOW REGISTER	
29	FIXED POINT CARRY REGISTER	
30	GENERAL USAGE FOR MICRO PROGRAMMER	
31		

MNEMONIC	DESCRIPTION
ADV	ADVANCE-INDICATION TO CODE DSR IS LOADED
ALU	ARITHMETIC AND LOGIC UNIT
BUSY	MEMORY CYCLE IN PROGRESS
CLEAR	CLEARS STORAGE DATA REGISTER
CTR 1	COUNTER 1
CTR 2	COUNTER 2
DMA	DIRECT MEMORY ACCESS
HDLC	HIGH DATA LOAD CLOCK
INS	INHIBIT MAIN STORE
LDLC	LOW DATA LOAD CLOCK
MBCU	MASTER BUS CONTROL UNIT
MPOR	MASTER POWER ON RESET
NIR	NEXT INSTRUCTION REGISTER
OPREG	OPERATION REGISTER
POH	POWER ON-HIGH
POI	POWER ON/OFF INTERRUPT
POID	POWER OFF INTERRUPT-DELAYED
POL	POWER ON-LOW
PREG	PROGRAM REGISTER
PROM	PROGRAMMABLE READ-ONLY MEMORY
PSW	PROGRAM STATUS WORD
READ/WRITE	DETERMINES TYPE OF OPERATION
ROS	READ ONLY STORE
ROSAR	ROS ADDRESS REGISTER
ROSBR	ROS BACKUP REGISTER
ROSDR	ROS DATA REGISTER
SAR	STORAGE ADDRESS REGISTER
SC	STORE COMPLETE
STAT	STATUS REGISTER
STROBE	SIGNAL TO READ SENSE AMPLIFIER
X-TIMING	TIMING PULSES FOR X-DIMENSION
Y-TIMING	TIMING PULSES FOR Y-DIMENSION

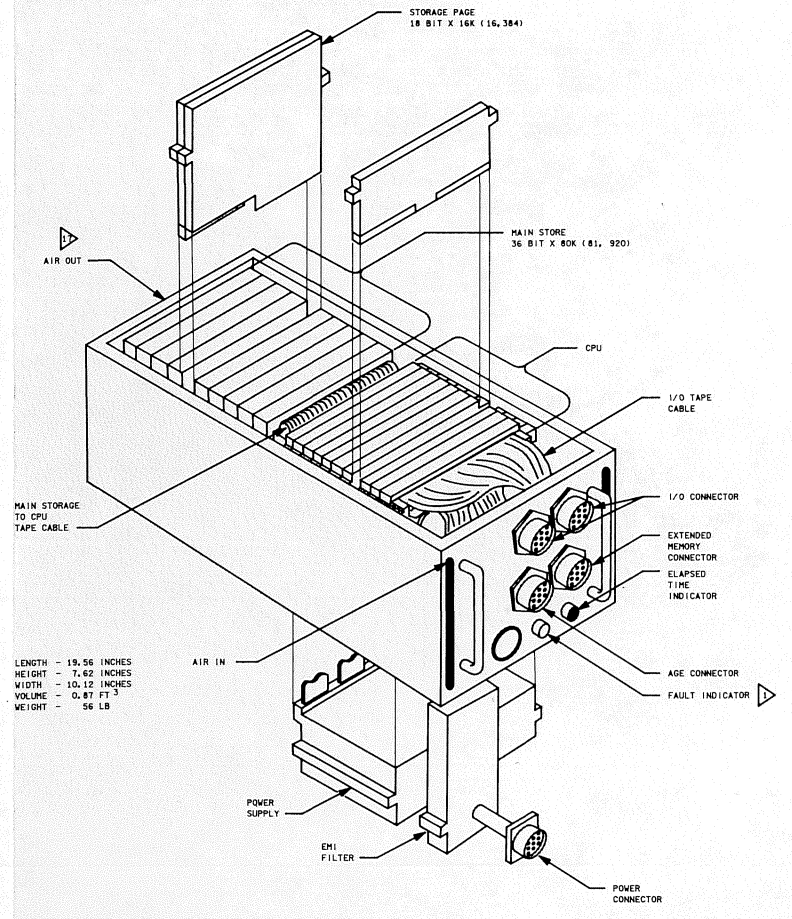

[1] THIS BLOCK DIAGRAM IS INDEXED TO THE PRODUCTION ALD'S VIA THE CODES (ALD PAGE NUMBERS) THAT APPEAR THROUGHOUT THE DIAGRAM

[2E] THE INTERRUPT HANDLING MICRODE WILL DIFFERENTITATE BETWEEN INTERRUPTS SET OFF BY CPU OR IOP OPERATIONS

[3E] ADDRESS MUST BE LESS THAN OR EQUAL TO 33FFF HEX

[4E] AS IMPLEMENTED IN CURRENT FLIGHT SOFTWARE, THIS INSTRUCTION IS ALWAYS A NO-OP

[7] CPU WILL OPERATE DOWN TO 8 PSI AND/OR ONE FAN FAILURE. LOSS OF CABIN PRESSURE OR BOTH FANS WILL INCAPACITATE OPERATING CPU AFTER ABOUT THIRTY MINUTES

[8E] CPU WILL "PIPELINE" TWO HALFWORD INSTRUCTIONS (THE "LOOK AHEAD" FEATURE), THUS SAVING 400 NANOSECONDS

[13] AS IMPLEMENTED IN CURRENT FLIGHT SOFTWARE DESIGN, ALL MACHINE CHECKS AND IOP INTERRUPTS ARE NEVER MASKED AND ALWAYS RESULT IN SOFTWARE HALT RESPONSE

[14] COUNTER 2 IS LOWER 16 BITS OF FCOS PROGRAM COUNTER. HIGH 16 BITS ARE STORED IN CPU MEMORY HALFWORD 0081

[15] COUNTER 1 IS LOWER 16 BITS OF "FCOS KNOWLEDGE OF TIME" HIGH 16 BITS ARE STORED IN CPU MEMORY HALFWORD 0080

[16] STORE PROTECT VIOLATION DETECTION ABORTS MEMORY WRITE

[17] ALL MUXES AND SHIFTS IN THE PROCESSOR ARE UNDER THE CONTROL OF THE MICROPROGRAM CONTROL UNIT.
[M,N] ⟹ MEANS DIRECT OR SHIFT M LEFT OR SHIFT N RIGHT

[18] THE CURRENT PSW IS STORED IN D REGISTER (PSW BITS 0 TO 31) AND P REGISTER (PSW BITS 32 TO 47) BUT MAY TEMPORARILY BE SWAPPED INTO CORE WHILE REGISTERS ARE BEING USED FOR ARITHMETIC OPERATIONS. IT IS ALSO SWAPPED DURING INTERRUPTS (AT THAT TIME, PSW BITS 48 TO 63 ARE SET)

[3] STATUS REGISTER BITS CAN BE INDIVIDUALLY SET ON COMMAND FROM MICROPROGRAM CONTROL UNIT

[6] CPU MEMORY WORDS ARE 36 BITS WITH 32 BITS OF DATA WITH 2 PARITY AND 2 STORAGE PROTECT BITS. MEMORY IS ADDRESSABLE TO THE HALFWORD. A PAIR OF PAGES FORMS A SECTOR.

[7] EXTERNAL DATA BUS IS THE IOP'S PATH TO CPU MEMORY FOR DIRECT MEMORY ACCESS (DMA). ALSO, THIS BUS IS THE DATA PATH FOR ALL DATA TRANSFERS BETWEEN THE CPU AND EXTERNAL SYSTEMS

[8] AUXILIARY DATA BUS IS THE DATA PATH FOR CPU MEMORY TO IOP MEMORY AND ALU TO IOP MEMORY TRANSFERS. THE ADDRESS BUS PROVIDES ADDRESS INFORMATION FOR THESE TRANSFERS

[5] IF BIT 0 IS A ONE, AN EXTRA FOUR BITS ARE PREFIXED TO THE ADDRESS AS FOLLOWS FOR DATA, THE DATA SECTOR REGISTER FOR INSTRUCTION, THE BRANCH SECTOR REGISTER

[1] DEFAULT IS 110 (PROCESSOR DATA, DIRECT)

[2] SIDE A AND B FOLD TO MAKE 16K X 18 BIT HALFWORD PAGE

[2] SIGNALS REPEAT FOR EACH SUBSEQUENT PAGE. POL ( ) PON ( ) ARE SUBSCRIPTED SIGNALS WITH VALUES 1 TO 10

NOTES= [1] FAULT INDICATOR IS DISCONNECTED

4 CPU 1

SIGNATURE		DATE	
DSGN	LINDA S. DUMIS	5-9-78	NATIONAL AERONAUTICS AND SPACE ADMINISTRATION LYNDON B. JOHNSON SPACE CENTER HOUSTON, TEXAS
DR	Bunk M. Barbara	6-30-78	
ENGR	B.F. JACKSON		CENTRAL PROCESSING UNIT
ENGR	Brent Hackler	8-23-79	
APP	M.D. Conway	8/23/79	
APP			SPACE SHUTTLE / DWG NO 8.4
OPNIPLAN	J.K. Kimbell	9-9-80	ALL
LTR E	PCN		121 X 34 / PAGE / SHEET 1 OF 1

BASIC REV E

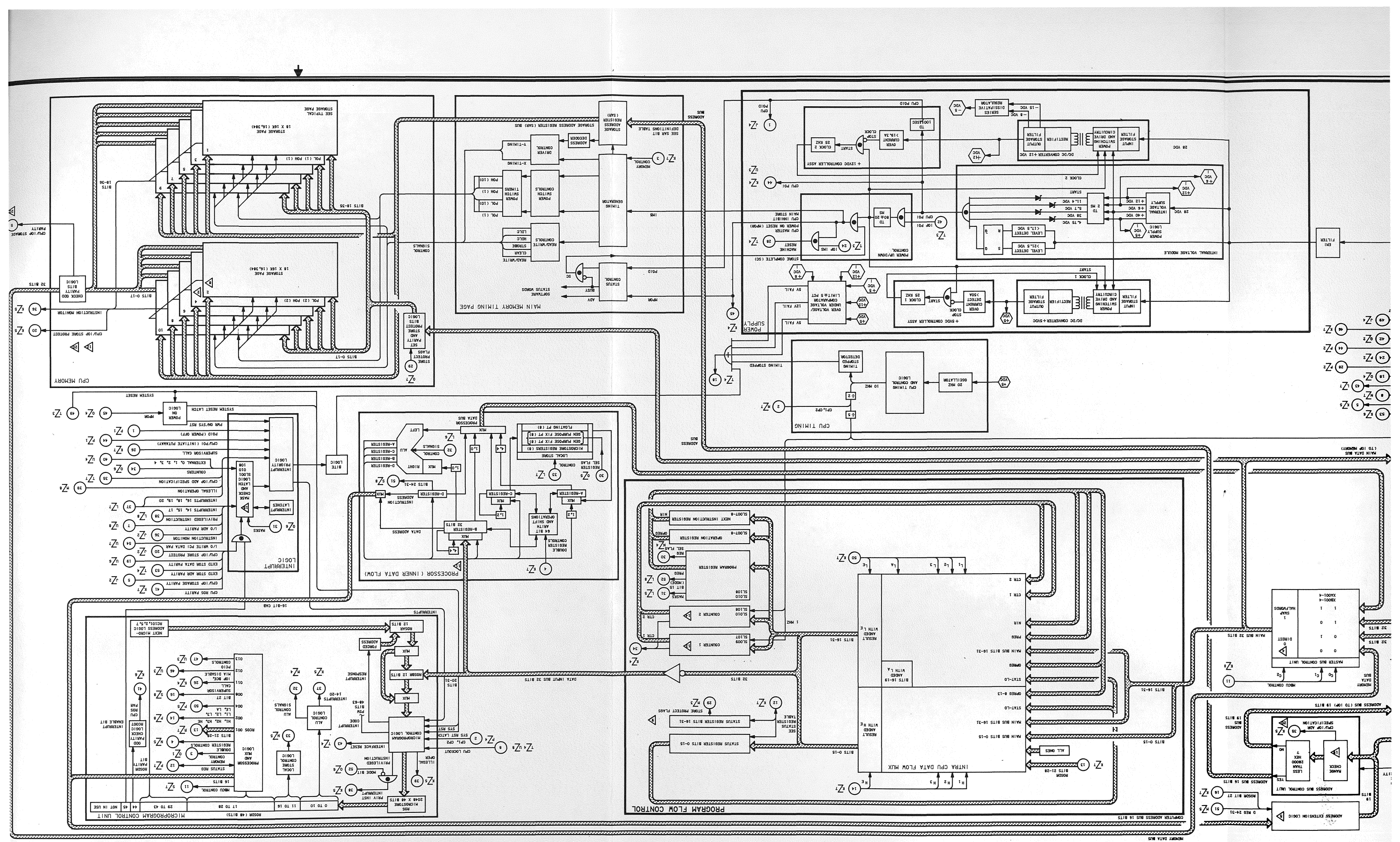
CPU MEMORY
STORAGE PAGE
18 X 16K (16,384)
SEE TYPICAL STORAGE PAGE
POL (1) POH (1)
POL (2) POH (2)
BITS 0-17
BITS 18-35
BITS 18-36
CHECK 000 PARITY BITS LOGIC
32 BITS
INSTRUCTION MONITOR
CPU/IOP STORE PROTECT
CPU/IOP STORAGE PARITY
CONTROL SIGNALS
STORE PARITY PROTECT FLAGS
SET PARITY AND STORE PROTECT LOGIC
MAIN MEMORY TIMING PAGE
STORAGE ADDRESS REGISTER (SAR)
STORAGE ADDRESS REGISTER (SAR) BUS
ADDRESS BUS
SEE SAR BIT DEFINITIONS TABLE
DECODER
DRIVER CONTROL
X-TIMING
Y-TIMING
TIMING GENERATOR
MEMORY CONTROL
POWER SWITCH CONTROLS
POH (1)
POL (10)
POH (10)
READ/WRITE CONTROLS
CLEAR
STROBE
HOLD
LOLC
IMS
POID
STATUS CONTROL
BUSY
ADV
MPOM
SOFTWARE STATUS WORDS
SC
POWER SUPPLY
+5VDC CONTROLLER ASSY
POWER UP/DOWN CONTROL
STOP CLOCK
OVER CURRENT DETECT
START
CLOCK 1
25 KHZ
CLOCK 2
+12VDC CONTROLLER ASSY
STOP CLOCK
OVER CURRENT >19.5A
100 USEC
TD
CPU POID
CPU POIO
DC/DC CONVERTER +5VDC
DC/DC CONVERTER +12 VDC
INPUT STORAGE SWITCHING AND DRIVE CIRCUITRY
POWER STORAGE FILTER
RECTIFIER
OUTPUT STORAGE FILTER
SERIES DISSIPATIVE REGULATOR
+5 VDC
+12 VDC
-8 VDC
-15 VDC
-5 VDC
28 VDC
INTERNAL VOLTAGE MODULE
POWER SUPPLY LOGIC
INTERNAL VOLTAGE SUPPLY
+5 VDC
+6 VDC
+40 VDC
+12 VDC
LEVEL DETECT >21.5 VDC
LEVEL DETECT <11.5 VDC
4.75 VDC
5.7 VDC
11.4 VDC
2 MS
80 uS-20 MS
CPU POWER ON RESET (MPOM)
CPU INHIBIT MAIN STORE
MACHINE RESET
STORE COMPLETE (SC)
IOP POI
IOP PO1
CPU PO1
CPU PO10
EMI FILTER
TIMING STOPPED
TIMING STOPPED DETECTION
CPU TIMING
CPU TIMING AND CONTROL LOGIC
10 MHZ
20 MHZ OSCILLATOR
CPL.CP2
CPL.CP1
PROCESSOR (INNER DATA FLOW)
PROCESSOR DATA BUS
LOCAL STORE
MICROSTORE REGISTERS (8)
GEN PURPOSE FIX PT (8)
GEN PURPOSE FIX PT (8)
GEN PURPOSE FIX PT (8)
FLOATING PT (8)
A-REGISTER
B-REGISTER
C-REGISTER
D-REGISTER
MUX
ALU
SHIFTER
LEFT
RIGHT
A-REGISTER
B-REGISTER
C-REGISTER
D-REGISTER
INSTRUCTION ADDRESS
DATA ADDRESS
B-REGISTER 32 BITS
64 BIT ARITH AND SHIFT OPERATIONS
DOUBLE REGISTER CONTROLS
BITS 24-31
BITS 0-15
BITS 16-31
ADDRESS BUS
DATA INPUT BUS 32 BITS
INTRA CPU DATA FLOW MUX
RESULT ANDED WITH L
RESULT ANDED WITH L&A
MAIN BUS BITS 16-31
MAIN BUS BITS 0-15
STAT-LO
OPRES 0-15
OPRES
MAIN BUS 32 BITS
MEMORY DATA BUS
MEMORY ADDRESS BUS
MBOX CONTROL
MASTER BUS CONTROL UNIT
DIRECT
SWAP
HALF-WORDS
XA001-4
XB001-4
ADDRESS BUS CONTROL UNIT
RANGE CHECK
LESS THAN 24000 HEX
YES
NO
CPU/IOP ADR SPECIFICATION
ADDRESS BUS 16 BITS
ADDRESS BUS 19 BITS
ADDRESS EXTENSION LOGIC
MBOX BIT 27
D MED 24-31
PROGRAM FLOW CONTROL
PROGRAM REGISTER
SL009 SL108
COUNTER 1
SL010 SL108
COUNTER 2
SL007-8
OPERATION REGISTER
NEXT INSTRUCTION REGISTER
NIR
OPRED
PRED
PRED SEL FLAG
MASK BIT 15 (MODE)
STATUS REGISTER BITS 16-31
STATUS REGISTER BITS 0-15
STORE PROTECT FLAGS
SEE STATUS REGISTER TABLE
MBOX BITS 21-28
ALL ONES
CTR 1
CTR 2
NIR
PRED
MAIN BUS BITS 16-31
STAT-LO
OPRES 0-15
MAIN BUS BITS 0-15
1 MHZ
INTERRUPTS
INTERRUPT LATCHES
MASKS
MASK CHECK AND LATCH LOGIC SLOO1 010 108
INTERRUPT PRIORITY LOGIC
INTERRUPT LOGIC
SYSTEM RESET
SYSTEM RESET LATCH
POWER ON LOGIC
MPOM
PWR ON/SYS RST
POID (POWER OFF)
CPU/POI (INITIATE AUTAWAY)
SUPERVISOR CALL
EXTERNAL 0, 1, 2, 3, 4
COUNTERS
ILLEGAL OPERATION
CPU/IOP ADD SPECIFICATION
INTERRUPTS 16, 18, 19, 20
INTERRUPTS 14, 15, 17
PRIVILEGED INSTRUCTION
I/O ADR PARITY
INSTRUCTION MONITOR
I/O WRITE PCI DATA PAR
CPU/IOP STORE PROTECT
EXTD STOR DATA PARITY
EXTD STOR ADR PARITY
CPU/IOP STORAGE PARITY
CPU ROS PARITY
16-BIT CAB
BITS
MICROPROGRAM CONTROL UNIT
ROSM (48 BITS)
NEXT MICRO-ADDRESS LOGIC ROI01,2,&,7
ROSM 12 BITS
FORCED ADDRESS
MUX
ROSM 12 BITS
MICROPROGRAM CONTROL
SYS MST LATCH
SYS MST
CPL.CP2
CPU LOCKOUT
MICROSTORE 2048 X 48 BITS
PRIV INST
PRIVILEGED INSTRUCTION
ILLEGAL OPER
MODE BIT
INTERFACE RESET
MEMORY CONTROL
STATUS REG
PROCESSOR MUX
DOUBLE REGISTER CONTROLS
ROSM 001
ROSM 002
ROSM 004
ROSM 006
ROSM 011
ROSM 012
ROSM 013
BIT 27
SUPERVISOR CALL
IOP BCE
MIA DISABLE
PRIO CONTROLS
M1, M2, M3, M4
L1, L2, L3, L4
LE, LA
BITS 21-28
ROSM PARITY BIT
CPU ROS PAR
INTERRUPT ENABLE BIT
000 PARITY CHECK LOGIC ROOT
0 TO 10
11 TO 16
17 TO 28
29 TO 43
44
45
NOT IN USE
INTERRUPT RESPONSE
INTERRUPTS 14-20
INTERRUPTS 48-63
PSW
CODE
ALU CONTROL SIGNALS
ALU CONTROL LOGIC
LOCAL CONTROL STORE
CENTRAL PROCESSING UNIT (CPU)

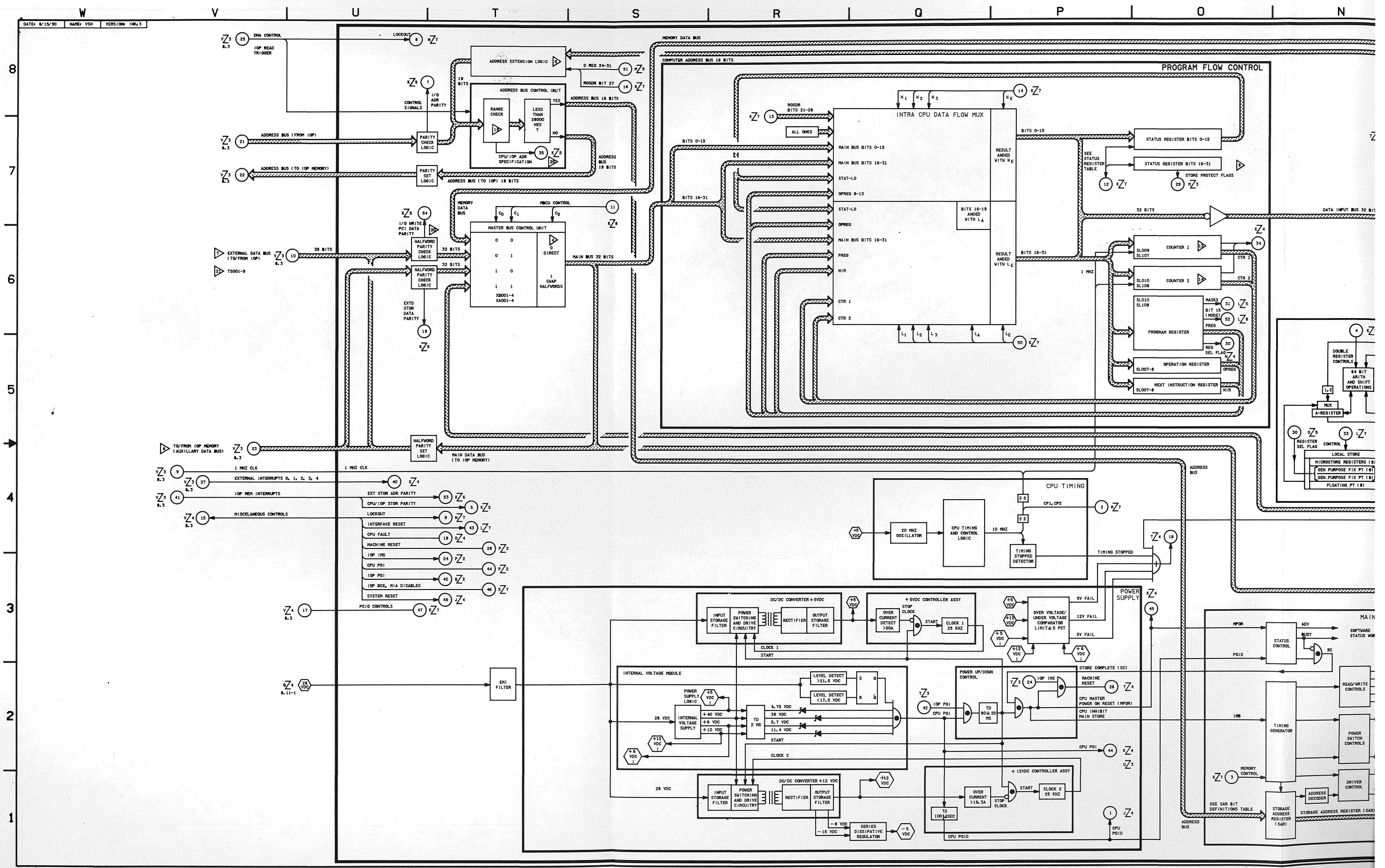

PROGRAM FLOW CONTROL
INTRA CPU DATA FLOW MUX
MAIN BUS BITS 0-15
MAIN BUS BITS 16-31
STAT-LO
OPREG 8-13
OPREG
PREG
NIR
CTR 1
CTR 2
RESULT ANDED WITH H_E
RESULT ANDED WITH L_E
BITS 16-19 ANDED WITH L_A
STATUS REGISTER BITS 0-15
STATUS REGISTER BITS 16-31
STORE PROTECT FLAGS
COUNTER 1
COUNTER 2
PROGRAM REGISTER
OPERATION REGISTER
NEXT INSTRUCTION REGISTER
ADDRESS EXTENSION LOGIC
ADDRESS BUS CONTROL UNIT
RANGE CHECK
LESS THAN 28000 HEX ?
CPU/IOP ADR SPECIFICATION
PARITY CHECK LOGIC
PARITY SET LOGIC
MASTER BUS CONTROL UNIT
HALFWORD PARITY CHECK LOGIC
HALFWORD PARITY SET LOGIC
MAIN BUS 32 BITS
MAIN DATA BUS (TO IOP MEMORY)
CPU TIMING
20 MHZ OSCILLATOR
CPU TIMING AND CONTROL LOGIC
TIMING STOPPED DETECTOR
POWER SUPPLY
DC/DC CONVERTER +5VDC
INPUT STORAGE FILTER
POWER SWITCHING AND DRIVE CIRCUITRY
RECTIFIER
OUTPUT STORAGE FILTER
+5VDC CONTROLLER ASSY
OVER CURRENT DETECT >50A
CLOCK 1 25 KHZ
OVER VOLTAGE/ UNDER VOLTAGE COMPARATOR LIMIT±5 PCT
INTERNAL VOLTAGE MODULE
INTERNAL VOLTAGE SUPPLY
LEVEL DETECT >21.5 VDC
LEVEL DETECT <17.5 VDC
POWER UP/DOWN CONTROL
TD 80±20 MS
DC/DC CONVERTER +12 VDC
+12VDC CONTROLLER ASSY
OVER CURRENT >19.3A
CLOCK 2 25 KHZ
TD 100 μSEC
SERIES DISSIPATIVE REGULATOR
EMI FILTER
STATUS CONTROL
TIMING GENERATOR
STORAGE ADDRESS REGISTER (SAR)
ADDRESS DECODER
DRIVER CONTROL
POWER SWITCH CONTROLS
READ/WRITE CONTROLS
MAIN

BASIC REV E

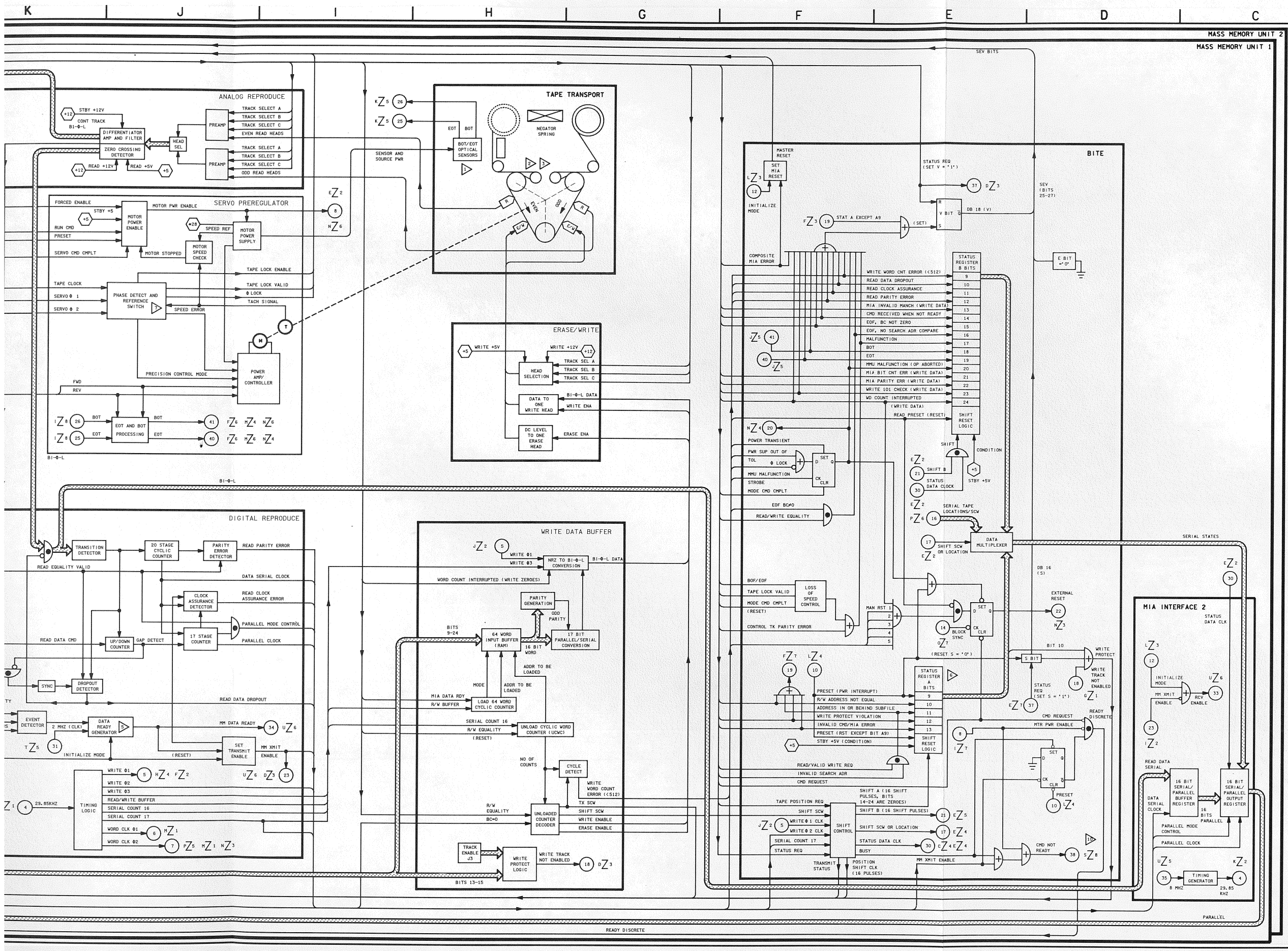

DATE: 9/14/87	NAME: MAG	VERSION: INK,7
DATE: 08/17/90	NAME: LAM	VERSION: BPT,6
DATE: 08/24/90	NAME: MFB	VERSION: INK,8

10. THERE ARE FIVE SEPARATE SETS OF TRUE-COMPLEMENT WIRES RUNNING FROM THE BITE LOGIC TO THE MMU EXTERNAL CONNECTOR AND DRIVEN BY ONE SET OF DRIVERS
9. THIS POWER TRANSIENT CAUSES SHUTDOWN OF UNIT AND REQUIRES POWER CYCLING TO RECOVER
8. A POWER SPIKE <15V WITH CONTINUAL VOLTAGE OF <24V FOR 20-250 µSEC, CAUSES A SINGLE NO 1 OUTPUT WHEN POWER RESUMES. FOR >250 µSEC SPIKES AND POWER OFF CONDITIONS, RESUMPTION OF POWER CAUSES AN OUTPUT ON NO 1, FOLLOWED BY A STEP OUTPUT ON OUTPUT NO 2.
7. TACH SIGNAL IS USED FOR ACCELERATION AND DECELERATION. THE TAPE CLOCK IS USED ONCE THE TRANSPORT IS UP TO SPEED AND ENTERS THE PRECISION CONTROL MODE. (≤ .5 SECONDS)
6. STATUS REGISTER A AND B BITS 9-13 AND 9-24 RESPECTIVELY ARE PACKED LEFT JUSTIFIED IN THE DOWNLIST
5. ONE PULSE FOR EACH WORD SHIFTED INTO MIA-2
4. THE INITIALIZE MODE PRESETS THE STORAGE REGISTER TO BOF FILE 4
3. TAPE FACTS:
   602 FEET LONG/0.5 INCHES WIDE
   1 MHZ INPUT/OUTPUT RATE
   TAPE TRANSVERSE TIMES:
   0.823 SEC PER SUBFILE
   8.2 SEC PER FILE
   APPROX. 65.6 SEC PER TAPE
2. TAPE ORGANIZATION:

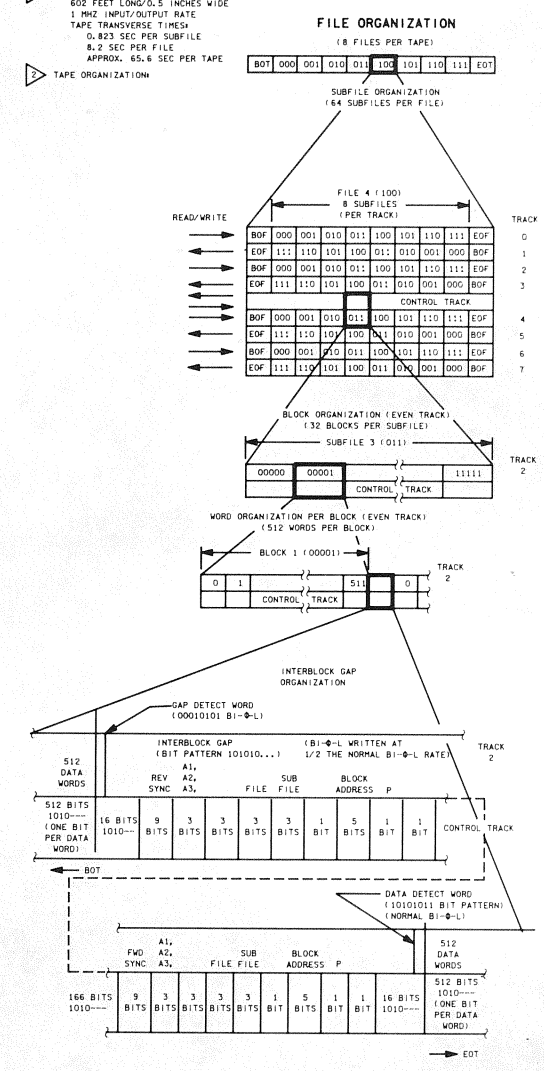

NOTES: 1. BOT/EOT OPTICAL DETECTORS ARE OPTICAL TYPE SENSORS. EACH UTILIZING ITS OWN DIODE/SENSOR ASSEMBLY WHICH DETECTS A WINDOW IN THE TAPE TO GENERATE A BOT OR EOT SIGNAL. IF EOT IS SENSED, A TURNAROUND SIGNAL IS GENERATED. IF BOT IS SENSED, ALL MMU OPERATIONS HALT AND POWER CYCLING IS REQUIRED TO RECOVER

5 MM

SIGNATURE	DATE	NATIONAL AERONAUTICS AND SPACE ADMINISTRATION LYNDON B. JOHNSON SPACE CENTER HOUSTON, TEXAS
DSGN MIKE BECKER	6-28-79	
DR		
ENGR T. W. KEELER	8/24/90	MASS MEMORY
ENGR Terry W Keeler	28 Aug 90	
APP M. D. Eng	8/28/90	
APP		SPACE SHUTTLE / DWG NO 8.5
OMNIPLAN S. A. Cindrell		ALL
LTR E / PCN		126.5 X 34 / PAGE / SHEET 1 OF 1

BASIC REV E

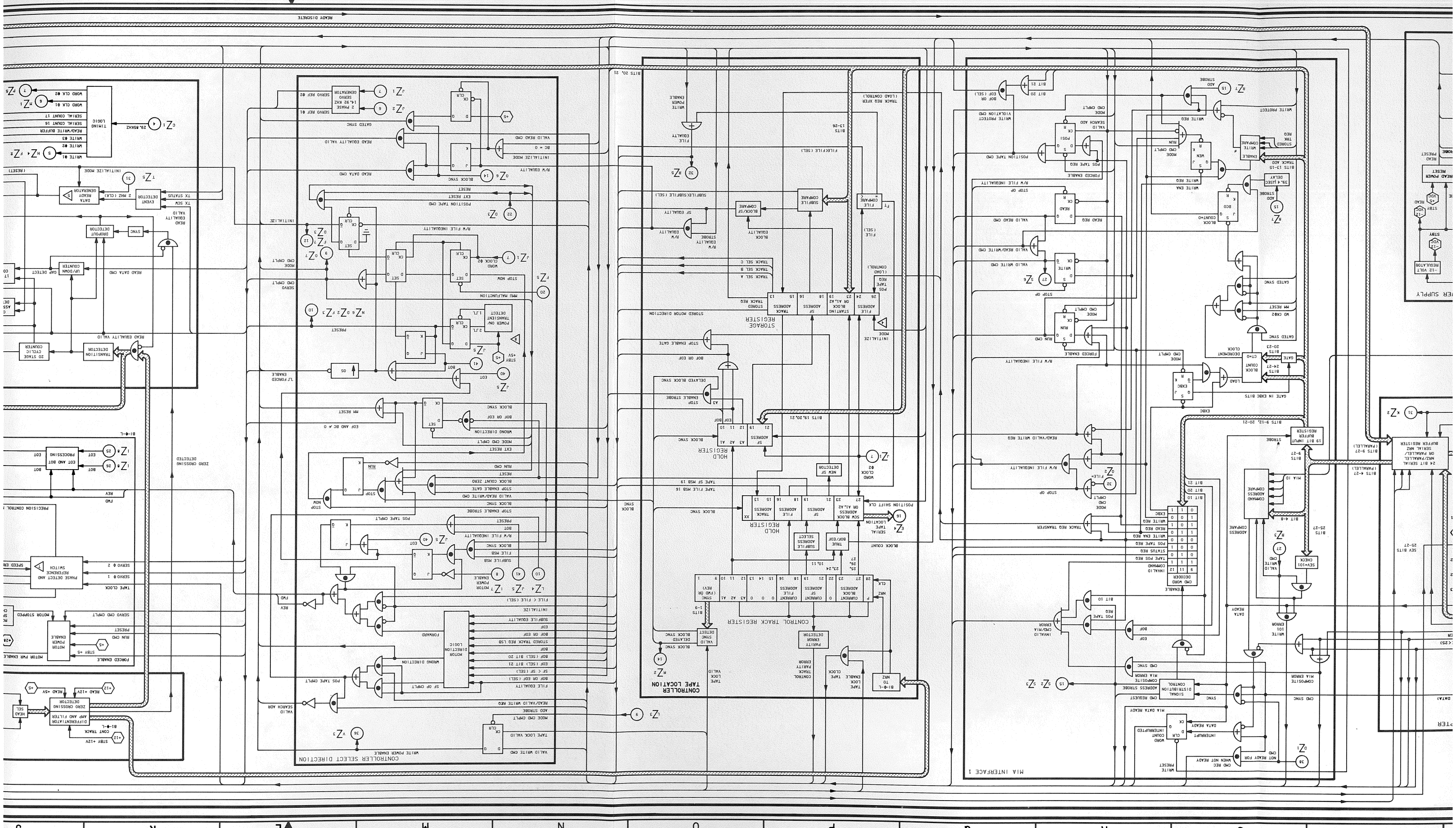
READY DISCRETE
CONTROLLER SELECT DIRECTION
CONTROLLER TAPE LOCATION
STORAGE REGISTER
CONTROL TRACK REGISTER
HOLD REGISTER
HOLD REGISTER
MIA INTERFACE 1
TIMING LOGIC
INITIALIZE MODE
READ DATA CMD
READ EQUALITY VALID
WRITE DATA
WRITE EOF
WRITE CLK 01
WORD CLK 02
SERIAL COUNT 17
SERIAL COUNT 16
READ/WRITE BUFFER
WRITE 03
WRITE 02
WRITE 01
29.85KHZ
2 PHASE 14.92 KHZ SERVO GENERATOR
SERVO REF 01
SERVO REF 02
GATED SYNC
READ EQUALITY VALID
INITIALIZE MODE
BC = 0
R/W EQUALITY
BLOCK SYNC
READ DATA CMD
POSITION TAPE CMD
EXT RESET
RESET
INITIALIZE
R/W FILE INEQUALITY
CLOCK 02
WORD
STOP NOW
MODE CMPLT
SERVO CMD CMPLT
PRESET
STOP NOW
R&W MALFUNCTION
TLF FORCED ENABLE
2 LFL
TRANSITION DETECTOR
20 STAGE CYCLIC COUNTER
READ EQUALITY VALID
DROPOUT DETECTOR
SYNC
UP/DOWN COUNTER
GAP DETECT
READ DATA CMD
DATA READY REFERENCE GENERATOR
2 MHZ (CLK)
EVENT DETECTOR
TX STATUS
TX SCW
EQUALITY VALID
INITIALIZE MODE
(RESET)
PHASE DETECT AND REFERENCE SWITCH
SERVO 0 2
SERVO 0 1
TAPE CLOCK
SERVO CMD CMPLT
MOTOR STOPPED
PRESET
RUN CMD
MOTOR ENABLE
STBY +5
FORCED ENABLE
MOTOR PWR ENABLE
READ +12V
READ +5V
+12
+5
DIFFERENTIATOR AMP AND PULSER
ZERO CROSSING DETECTOR
READ SEL
CONT TRACK
STBY +12V
ZERO CROSSING DETECTED
PROCESSING
EOT AND BOT
BOT
EOT
REV
FWD
PRECISION CONTROL
SPEED ERR
MOTOR DIRECTION LOGIC
FORWARD
REV
FWD
MOTOR ENABLE
MOTOR PWR ENABLE
MOTOR DIRECTION
WRONG DIRECTION
SP OP CMPLT
POS TAPE CMPLT
FILE EQUALITY
BOF OR EOF (SEL)
EOF (SEL) BIT 21
BOF (SEL) BIT 20
BOF
STORED TRACK REG LSB
EOF
SUBFILE EQUALITY
FILE < FILE (SEL)
INITIALIZE
R/W FILE INEQUALITY
EXT RESET
BOT
PRESET
STOP ENABLE GATE
BLOCK COUNT ZERO
RESET
RUN CMD
STOP
BLOCK SYNC
STOP ENABLE STROBE
VALID READ/WRITE CMD
SEARCH ADR
VALID
WRONG DIRECTION
MODE CMD CMPLT
EXT RESET
BOF OR EOF
BLOCK SYNC
PM RESET
EOF AND BC = 0
ADD STROBE
TAPE CLOCK VALID
VALID WRITE CMD
WRITE POWER ENABLE
READ/VALID WRITE REQ
FILE EQUALITY
SP OP CMPLT
MOTOR DIRECTION LOGIC
MOTOR POWER ENABLE
FILE MSB
BLOCK SYNC
R/W FILE INEQUALITY
BOT
PRESET
STOP ENABLE STROBE
BLOCK SYNC
STOP ENABLE GATE
VALID READ/WRITE CMD
BLOCK COUNT ZERO
RESET
RUN CMD
STOP
STOP NOW
POS TAPE CMPLT
TAPE MSB 19
BLOCK SYNC
SYNC
BLOCK SYNC
BLOCK SYNC
SUBFILE SUBFILE (SEL)
SUBFILE COMPARE
SF EQUALITY
BLOCK EQUALITY
R/W EQUALITY STROBE
TRACK SEL A
TRACK SEL B
TRACK SEL C
STORED MOTOR DIRECTION
STOP ENABLE GATE
BOF OR EOF
DELAYED BLOCK SYNC
STOP ENABLE STROBE
EOF BOF
BLOCK SYNC
WRONG DIRECTION
BLOCK SYNC
TAPE FILE MSB 19
BLOCK SYNC
BLOCK SYNC
BLOCK SYNC

DATE: 08/24/90 | NAME: MFB | VERSION: INK.8

W V U T S R Q P O N

8 7 6 5 4 3 2 1

WRITE ENABLE CMD
OP CODE 1010 | TRACK 9 12 13 15 16 27 | P 28

EXTENDED DATA CMD
OP CODE 0011 | BLOCK COUNT 9 12 15 17 20 27 | P 28

READ/WRITE CMD
OP CODE | TRACK | SUBFILE | STARTING BLOCK | BLOCK COUNT | P
READ 1001 / WRITE 1000
9 12 13 15 16 18 19 23 24 27 28

COMMAND DATA WORD
DATA FIELD 9 24 | SEV 25 27 | 101 | P 28

POSITION REQUEST/STATUS REQUEST CMD
OP CODE | P
POSITION STATUS 0010 / 0001
9 12 13 27 28

POSITION TAPE CMD
OP CODE | TRACK | SUBFILE | BOF EOF | FILE | P
0000
9 12 13 15 16 18 19 20 21 22 23 24 26 27 28

CMD WORDS TO MMU FROM GPC

SEARCH COMPLETE WORD
TRACK | FILE | SUBFILE | BLOCK | SEV | P
9 10 11 13 14 16 17 19 20 24 25 27 28

RESPONSE DATA WORD
DATA FIELD 9 24 | SEV 25 27 | P 28

TAPE POSITION WORD
TRACK | FILE | SUBFILE | BOF EOF | SEV | P
9 10 11 13 14 16 17 19 20 21 22 24 25 27 28

RESPONSE WORDS FROM MMU TO GPC

STRAP BACK MIA ID CODE (11) — LSB, MSB

$V_{CNTLAB2}$ — MMU 2 — ON / OFF — PNL 015 S12 — RPC 7.5A — V_{MNB} FPC2 — V72 ST18SE OF2 N/A — MASS MEMORY NO 2 BUS CMD — 1 = ON 1 S/S

$V_{CNTLAB1}$ — MMU 1 — ON / OFF — PNL 014 S13 — RPC 7.5A — V_{MNA} FPC1 — V72 ST18SE OF1 N/A — MASS MEMORY NO 1 BUS CMD — 1 = ON 1 S/S

MMU 2 DATA BUS IOP PORT 19 (DBC)

MMU 1 DATA BUS TO IOP PORT 18 (DBC)

MMU 2 READY DISCRETE (DI07-5 LINES)

MMU 1 READY DISCRETE (DI06-5 LINES)

RESET DISCRETES NOT CONNECTED

READY DISCRETE

MIA ADAPTER

RCVR — BITS 1-28 — MANCHESTER TO NRZ AND VALIDATION

RECEIVE SYNC (CMD OR DATA)
MIA PARITY ERROR
MIA BIT COUNT ERROR (<25)
MIA INVALID MANCHESTER
RECEIVE SHIFT CLOCK
RECEIVE DATA NRZ
DATA READY
RECEIVE DATA BUS ACTIVE
RECEIVE END OF WRD
RECEIVER ENABLE (33)
MM XMIT ENABLE (23)
MM DATA READY (34)
MASTER RESET
16 MHZ CLK — TIMING GEN — STBY +5V +5
8 MHZ CLK (35)
TIMING AND LOGIC CONTROL

TRANSMIT DATA AVAILABLE
TRANSMIT SERIAL DATA NRZ
TRANSMIT SHIFT CLOCK
2 MHZ (31)
NRZ TO MANCHESTER SYNC GEN, PARITY GEN — TX

24 BIT SERIAL NRZ/PARALLEL OR PARALLEL/ SERIAL NRZ BUFFER REGISTER
BITS 4-27 (PARALLEL)
BITS 9-27 (PARALLEL)
SEV BITS 25-27

19 BIT INPUT BUFFER REGISTER — BITS 9-27 — STROBE
BITS 9-12, 20-21

MIA INTERFACE 1

NOT READY FOR CMD (38)
CMD REC WHEN NOT READY
WRITE PRESET
INTERRUPT
DATA READY
CLR D Q CK — WORD COUNT INTERRUPTED
MIA DATA READY

CMD SYNC
SYNC — SIGNAL DISTRIBUTION CONTROL — CMD REQUEST
ADDRESS STROBE (15)
COMPOSITE MIA ERROR
CMD SYNC

EOF
BOF
POS TAPE REQ
BIT 10
INVALID CMD/MIA ERROR

WRITE 101 ERROR
DATA READY

ENABLE — CMD WORD DECODER

9	11	12	INVALID COMMAND
1	1	1	
0	1	0	TAPE POS REQ
0	0	1	STATUS REQ
0	0	0	POS TAPE REQ
1	1	0	WRITE ENA REQ
1	0	1	READ REQ
1	0	0	WRITE REQ
0	1	1	EXBC

BIT 10
BIT 20
BIT 21

SEV=101 CHECK
VALID WRITE CMD (27)
BITS 25-27
ADDRESS COMPARE
BIT 4-8
COMMAND ADDRESS COMPARE
MIA ID

TRACK REQ TRANSFER
MODE CMD CMPLT
FILE= (32)
STOP OP
R/W FILE INEQUALITY
READ/VALID WRITE REQ

EXBC
GATE IN EXBC BITS
LOAD
BITS 24-27
GATE
BITS 20-23
BLOCK COUNT CT=0
DECREMENT CLOCK
MODE CMD CMPLT

R/W FILE INEQUALITY
FORCED ENABLE
RUN CMD
RUN
MODE CMD CMPLT

GATED SYNC
WD CK@2 MM RESET
GATED SYNC

STOP OP
WRITE (27)
VALID WRITE CMD
VALID READ/WRITE CMD
READ REQ
READ
VALID READ CMD
STOP OP
R/W FILE INEQUALITY

BLOCK COUNT=0
BCO
ADD STROBE (15)
39.4 µSEC DELAY
WRITE ENA
WRITE REQ
BITS 13-15 TRACK ADD
ENABLE
WRITE COMPARE
STORED TRK REQ
WEN
MODE CMD CMPLT
RUN
WRITE REQ
WRITE PROTECT
ADD STROBE (15)

FORCED ENABLE
POS TAPE REQ
POSI
POSITION TAPE CMD
VALID SEARCH ADD
MODE CMD CMPLT
WRITE PROTECT VIOLATION CMD
BIT 20
BIT 21
BOF OR EOF (SEL)

POWER SUPPLY

28VDC — DC/DC CONVERTER
+5 VOLT REGULATOR
-12 VOLT REGULATOR
+7 VOLT REGULATOR
+12 VOLT REGULATOR
PWR SUPPLY TOLERANCE
WRITE +12 ENABLE (36)
WRITE POWER
+12 VDC READ/WRITE
+12 VDC STBY
+12 VDC READ
+5 VDC STBY
+5 VDC READ
+5 VDC WRITE/READ
-12 VDC STBY
+5 VDC STBY
-12 VDC READ
POWER SUPPLY OUT OF TOLERANCE
READ POWER RESET
READ PRESET
MM STROBE
MM MALFUNCTION STROBE
28 VDC — POWER TRANSIENT INPUT (15V AND REMAINS <24V FOR > 250 µS)
PWR TRANSIENT (9)
+28 VDC SERVO POWER
RESET DISCRETE REVS 1 2 3 4 5

CONTROLLER TAPE LOCATION

BI-Φ-L TO NRZ
TAPE LOCK ENABLE
TAPE CLOCK
CONTROL TRACK PARITY ERROR
PARITY ERROR DETECTOR
TAPE LOCK VALID
VALID SYNC DETECT (14)
BLOCK SYNC
DELAYED BLOCK SYNC

CONTROL TRACK REGISTER
BITS 1-9
NRZ
CLK
P | CURRENT BLOCK ADDRESS | 0 | CURRENT SF ADDRESS | CURRENT FILE ADDRESS | 0 0 0 | A3 A2 A1 | SYNC (FWD OR REV)
28 27 23 22 21 19 18 16 15 14 13 12 11 10 9 1
25, 26, 27 — 23, 24 — 10, 11

BLOCK COUNT
TRUE BOF/EOF
SUBFILE ADDRESS SELECT

SERIAL TAPE LOCATION (16)
POSITION SHIFT CLK
HOLD REGISTER
SCW BLOCK ADDRESS OR A1, A2 | SF ADDRESS | FILE ADDRESS | TRACK ADDRESS | XX
27 23 21 19 18 16 15 13
BLOCK SYNC

TAPE FILE MSB 16
TAPE SF MSB 19

WORD CLOCK @2 (7)
NEW SF DETECTOR

HOLD REGISTER
SF ADDRESS | A3 A2 A1
21 19 12 11 10
BLOCK SYNC
EOF BOF
BITS 19, 20, 21
A3 STOP ENABLE STROBE
DELAYED BLOCK SYNC
BOF OR EOF
STOP ENABLE GATE

STORAGE REGISTER
INITIALIZE MODE
FILE ADDRESS | STARTING BLOCK OR A1, A2 | SF ADDRESS | TRACK ADDRESS
26 24 23 19 18 16 15 13
STORED TRACK REQ
STORED MOTOR DIRECTION
POS TAPE REQ (LOAD CONTROL)
TRACK SEL A
TRACK SEL B
TRACK SEL C
FILE (SEL)
FILE COMPARE =
SUBFILE COMPARE
BLOCK EQUALITY
BLOCK/SF COMPARE
R/W EQUALITY STROBE
R/W EQUALITY
SF EQUALITY
SUBFILE=SUBFILE (SEL)
FILE=FILE (SEL)
BITS 13-26
FILE EQUALITY
WRITE POWER ENABLE
TRACK REQ XFER (LOAD CONTROL)
BITS 20, 21

VALID WRITE CMD
TAPE LOCK VAL
MODE CMD CMPL
ADD STROBE
READ/VALID WR
FILE EQUALITY
BOF OR EOF (SE
SF < SF (SEL)
EOF (SEL) BIT
BOF (SEL) BIT
BOF
STORED TRACK
BOF OR EOF
EOF
SUBFILE EQUALI
INITIALIZE
FILE < FILE (S
(9) (10) (41)
(20)
R/W EQUALITY
INITIALIZE MODE
BC = 0
VALID READ CMD

BASIC REV E

DATE: 08/03/94	NAME: LAM	VERSION: INR: 13
DATE: 05/12/96	NAME: PSD	VERSION: BPT: 13
DATE: 05/23/96	NAME: MDU	VERSION: INR: 14

DEU 4
DEU 1
DEU 2
DEU 3

BIT 0=LOGIC 1

DEU REGISTER 1
DEU REGISTER 2
DU REGISTER

LATCH 15
LATCH 2
LATCH 1
S Q R Q

BITS 1-15
BITS 4-15
BITS 0-3

16 TRI-STATE BUS DRIVERS

NOTE: DU FILAMENT ERROR (BIT 5) AND DU TEMPERATURE ERROR (BIT 6) DO NOT LATCH

RESET CONTROL
RESET REG 1
RESET REG 2
RESET DU REG

BITE STATUS DATA

BITS 0-15 HSR NO 1
BITS 0-15 HSR NO 2

TIMING AND CONTROL

ERROR SAMPLING

PARAMETER	TD
HSR NO. 1	
BITS 0, 1, 3, 6	NO TRIP
BITS 2, 8	0 SEC
BITS 4, 5, 7, 9-15	6-10 SEC
HSR NO. 2	
BITS 0-7, 12-15	NO TRIP
BITS 8-11	6-10 SEC
CPU MEM PAR ERR	6-10 SEC
PWR SUPPLY ERR	0 SEC

+V

(5720P)
(5650P)
(5910P)
V72 M5810P
DEU 3 MCDS STATUS WORD 1
1=ON
1 5/5

(5740P)
(5670P)
(5930P)
V72 M5830P
DEU 3 MCDS STATUS WORD 2
1=ON
1 5/5

(SOFTWARE SHIFTS REGISTER 2 LEFT ONE BIT AND *OR'S IT WITH REGISTER 3 TO FORM HARDWARE STATUS WORD 2 FOR POLL RESPONSE)

DU PHOSPHOR PROTECT NOT WIRED TO DEU IN FLIGHT UNITS

DU PHOSPHOR PROTECT NOT WIRED FROM DU IN FLIGHT UNITS

BIT NO	HARDWARE STATUS REGISTER NO 1 (CONT'D)
4	INTENSITY PARITY ERROR
5	SIN/COS PARITY ERROR
6	SYM GEN ACTIVE STATUS
7	CHARACTER PARITY ERROR
8	OSCILLATOR ERROR
9	ANALOG ZERO DEFL TEST
10	ANALOG NON-ZERO DEFL TEST
11	ANALOG PULSE TEST
12	CIRCLE OSC ERROR
13	ANALOG FAIL (OR OF 9-11)
14	SYM GEN DISPLAY WRAP ERROR
15	SYM GEN REFRESH ERROR

SYMBOL GENERATOR

FEATURE CONTROL 10 BITS
TO SYMBOL GENERATOR CIRCUITS
SIN/COS PARITY ERROR
ROTATION CONTROL 12 BITS
POSITION CONTROL 11 BITS
X Y POSITION D/A
CHARACTER PARITY ERROR
CHARACTER CONTROL 14 BITS
CHARACTER INTEGRATOR
CIRCLE OSC ERROR
CIRCLE GEN CONTROL 10 BITS
CIRCLE/VECTOR GENERATOR SIZE CONTROL
VECTOR GEN CONTROL 12 BITS
X Y TRANSLATE CONTROL 11 BITS
X Y TRANSLATE D/A
ANALOG CONTROL 9 BITS
REPEAT CONTROL 11 BITS
OVERSCAN
INTENSITY CONTROL 7 BITS
INTENSITY D/A
INTENSITY PARITY ERROR
ROTATION MUX
OUTPUT MUX
X DEFL DRIVER
Y DEFL DRIVER
VIDEO DRIVER
ANALOG BITE
ANALOG DEFL (ZERO TEST)
ANALOG DEFL (NON-ZERO TEST)
ANALOG PULSE TEST
ANALOG FAIL

MSS DU (CRT 4)
LEFT DU (CRT 1)
RIGHT DU (CRT 2)
CENTER DU (CRT 3)

DU POWER SUPPLY ERROR
DU FILAMENT ERROR
DU PHOSPHOR PROTECT ERROR
DU VIDEO ERROR
DU DEFLECTION ERROR
DEFLECTION ERROR
DRIVER IS ONLY ENABLED BY RUNNING SASTP AFTER POWER CYCLE. NORMALLY NOT ENABLED AT LAUNCH
DU GO/NO GO
YOKE RTN
DEU GO/NO GO
X DEFLECTION RECEIVER
X DEFLECTION AMPLIFIER
TEMPERATURE ERROR (T>125° C)
VIDEO ERROR
Y DEFLECTION RECEIVER
Y DEFLECTION AMPLIFIER
VIDEO BITE
VIDEO BITE MUST BE ARMED BY SASTP
VIDEO RECEIVER
VIDEO
CATHODE
FILAMENT
YOKE (MAGNETIC DEFL)
CRT
PHOSPHOR PROTECT
DISABLE BEAM
CONTROL GRID (G1-DISABLES ELECTRON BEAM)
POWER SUPPLY ERROR
LOW FILAMENT CURRENT
LOW VOLTAGE POWER SUPPLY AND CONTROL
6.3V
FILAMENT PWR
EMI FILTER
ELAPSED TIME INDICATOR (XXXX HRS)
DU PWR ON DISCRETE
PHOSPHOR PROTECT OVERRIDE
ACCELERATOR (G2-2300V)
FOCUS (ELECTROSTATIC)
AMDD+ 116 KV
HIGH VOLTAGE POWER SUPPLY
±25VDC
±80VDC
±80VDC
±63VDC
±25VDC
±15VDC
±5VDC
28 VDC 4
28 VDC 3
28 VDC 2
28 VDC 1
BRT
DU
DEU
DEU
BRIGHTNESS CONTROL
GO/NO GO INDICATOR
GO/NO GO INDICATOR
AMBIENT LIGHT DETECTOR
CIRCUIT WIRED IN FLIGHT UNITS ONLY

TYPICAL DU BITE CIRCUITRY
TO DEU
+V
1=NO ERROR 0=ERROR DETECTED
NOTE: IF DU INPUT POWER OR DU PWR ON DISC LOST, ALL BITE ERRORS WILL BE SET EXCEPT TEMP (REQUIRES RELAY PWR FOR SET), VIDEO (REQUIRES ARMING BY SASTP), AND PHOSPHOR PROTECT (FLIGHT UNITS ONLY)

5 INCH BY 7 INCH VIEWING AREA (26 LINES BY 51 CHARACTERS)
3/4" RADIUS

23. DEU RESPONSE DATA WORDS

DATA SYNC DEU ADDRESS | 16 DATA BITS AS DEFINED BELOW | PARITY

DATA WORD 1 IS STD HEADER
MSG TYPE K1 DEU ID MAJ FUNC SW K2
"MSG RESET" MESSAGE
MAJ FUNC: 0=PL, 1=GNC 2=SM, 3=NOT USED
"ACK" MESSAGE
DISPLAY FREEZE
KEYBOARD MSG PRESENT
STAND-ALONE SELF-TEST IN PROGRESS
CRITICAL BITE STATUS PRESENT
INITIALIZATION REQUIRED

DATA WORD 2: FORMAT INDEX | NOT USED | COUNT OF KEYSTROKES | KEYSTROKE CODE | KEYSTROKE CODE | KEYSTROKE CODE
30 IS THE MAXIMUM NUMBER OF KEYSTROKE CODES. PACKED 3 PER WORD AND LEFT JUSTIFIED
UNUSED KEYSTROKE CODES WILL BE PADDED ZERO

DATA WORDS 3-12: HARDWARE STATUS WORD 1
DATA WORD 13: HARDWARE STATUS WORD 2
DATA WORD 14: SOFTWARE STATUS WORD
DATA WORD 15: CHECK SUM (2'S COMPLIMENT OF PREVIOUS 15 WORDS)
DATA WORD 16

FOLLOWING THE DEU TRANSMISSION OF THIS RESPONSE, BITS 13, 19, 21, AND 23 OF THE HEADERWORD ARE RESET. ADDITIONALLY, THE DEU HARDWARE AND SOFTWARE BITE STATUS

(22) IF LVPS SENSES EXCESS CURRENT, THE POWER SUPPLY WILL SHUTDOWN, AUTO RESET, AND MAY RESULT IN ON/OFF CYCLING.

(21) CRT 4 USES KEYBOARD ADAPTER A IN DEU 4

(20) DU TEMPERATURE ERROR WILL ALWAYS TRIP DU GO/NO GO INDICATOR, ALL OTHER DU BITE REQUIRES ARMING BY SASTP

(19) FLAGS ARE ALL BLACK UNTRIPPED, BLACK AND WHITE (AS SHOWN) TRIPPED

(18) WIRING RETURNS TO DEU FOR GROUND

(17) SYMBOL GENERATOR CIRCUITS INCLUDE:
1. CHARACTER AND INTENSITY
2. ANALOG SWITCH CONTROL
3. DIGITAL CONTROLS
4. VIDEO CONTROLS
5. TYPE CONTROLS

(16) KBA-A (OR KBA-B) ERROR: SET WHEN THE KEYSTROKE CODE IS NOT SENT TO DEU MEMORY (VIA TRI-STATE BUS DRIVERS) WITHIN 9 MILLISECONDS FOLLOWING THE INITIAL KEYBOARD BREAK-IN REQUEST

(15) ANALOG BITE: DEU ANALOG CIRCUITS DETECT AN ERROR IN RESPONSE TO THE ANALOG TEST FCN. AFFECTS BITS 9, 10, 11, & 13 IN THE HARDWARE REGISTER 1. VALID DURING SASTP ONLY

(14) REFRESH ERROR: COUNTDOWN COUNTER INITIATING THE START OF THE REFRESH CYCLE IS OVERDUE BY 18 MS AS INDICATED BY AN R-C TIMER

(13) CIRCLE OSC ERROR: CIRCLE REPETITION RATE GOES TO ZERO

(12) CHARACTER PARITY ERROR: CHARACTER GENERATOR ROM PARITY ERROR. CHECK IS PERFORMED EACH TIME THE ROM IS READ (I.E. FOR EACH CHARACTER)

(11) SIN/COS PARITY ERROR: SINE-COSINE ROM PARITY ERROR. CHECK IS PERFORMED EACH TIME SINE-COSINE ROM IS ACTIVATED

(10) INTENSITY PARITY ERROR: INTENSITY PROM PARITY ERROR. CHECK IS PERFORMED EACH TIME PROM IS ACTIVATED (I.E. FOR ALL SYMBOLS)

(9) IPL ERROR: IPL PROM PARITY ERROR FOLLOWING A MANUAL IPL OR A PERIODIC IPL PROM PARITY CHECK INITIATED BY DEU RESIDENT SOFTWARE

(8) IPL CIRCUIT CHECK ERROR: PARITY ERROR RESULTING FROM A PERIODIC IPL PROM PARITY CHECK (NOT USED)

(7) MIA CMD ERROR (ANY ONE OF THE FOLLOWING)
1. MIA PARITY ERROR
2. TRANSMIT MANCHESTER ERROR (FROM IOP)
3. BIT COUNT ERROR (ON RECEIVED CMD WRD)

(6) MIA ECHO CHECK ERROR: TRANSMIT NRZ DATA DOES NOT COMPARE TO THE RECEIVE NRZ DATA ON THE INTERFACE OF THE MIA AND MIA ADAPTER

(5) DU PHOSPHOR PROTECT: ATTEMPTS TO DISABLE ELECTRON BEAM IF ERROR IS FOUND IN X OR Y DELECTION RECEIVERS, VIDEO RECEIVER, OR POWER SUPPLY. FLIGHT UNITS NO-OP THIS CIRCUITRY VIA PHOSPHOR PROTECT OVERRIDE

(4) DU VIDEO ERROR: LAST STAGE OF VIDEO AMPLIFIER ALWAYS ON

(3) DU POWER SUPPLY ERROR: THE ±80V, ±25, -15 AND +5 VOLTAGES ARE SUMMED FOR COMPARISON TO A REFERENCE VOLTAGE. THE BIT IS SET WHEN THE COMPARISON FAILS

(2) DU DEFLECTION ERROR: IMPROPER BEAM POSITION DETECTED BY COMPARING DEFLECTION SIGNAL VERSUS YOKE RETURN

NOTES: (1) SOFTWARE STATUS WORD

BIT	DESCRIPTION
0	DISPLAY/FORMAT DATA FILL ERROR
1	SPARE
2	INITIALIZATION PERFORMED (CRITICAL BITE)
3	INVALID FILL/DUMP WORD COUNT
4	MIA WRAP WORD ERROR
5	COMMAND OVERLOAD
6	SPARE
7	CPU MEMORY PARITY ERROR (CRITICAL BITE)
8	SPARE
9	INVALID MESSAGE RECEIVED
10	RIPPLE TEST ERROR
11	CHECKSUM ERROR (FORMAT/IPL)
12	INVALID FILL/DUMP DATA ADDRESS
13	RECEIVED MESSAGE INCOMPLETE
14	CPU SELF-TEST ERROR (CRITICAL BITE)
15	INCOMPLETE DEU TRANSMISSION

6 MCDS

SIGNATURE		DATE	
DSGN	J D HOLMES	7-16-79	NATIONAL AERONAUTICS AND SPACE ADMINISTRATION LYNDON B. JOHNSON SPACE CENTER HOUSTON, TEXAS
DR			
ENGR	PL MAI		MULTIFUNCTION CRT DISPLAY SYSTEM
ENGR	[signature]	6/5/96	
APP	[signature]	6-4-96	
APP	H. J. [signature]	6/4/96	SPACE SHUTTLE
CADS	S. K. Kimbrel	6-19-96	ALL

DWG NO 8.6
LTR E PCN 6
126.5 X 34 PAGE SHEET 1 OF 1

BASIC REV E-6

T S R Q P O N M L K J

DEU LOAD
DEU LOAD NOT

LEFT CRT SEL
RIGHT CRT SEL
CRT 1B
CRT 3A
CRT 3B
CRT 2A
CRT 4A

PWR SUP
VOLTAGE REGULATOR NO 1 — +12V AT 3A, -5V AT 5A — TO MEMORY AND I/O CIRCUITS
VOLTAGE REGULATOR NO 2 — +17V, -17V — FILTER +15V, FILTER -15V — TO ANALOG CIRCUITS
VOLTAGE REGULATOR NO 3 — -15V — -12V AT 1A — TO I/O AND DIGITAL CIRCUITS
+5V AT 18A — +5V AT 18A — +5 SENSE — FILTER +5V — TO ANALOG CIRCUITS
DC/DC CONVERTER
PULSE WIDTH CONTROL
START
+12V
-6V
INTERNAL VOLTAGE MODULE
+40V
+12V
+5V
-6V
POWER ON INTERRUPT
+5V LOOP CONTROL
VOLTAGE MONITORS
+12V
-12V
+15V
-15V
-5V
PWR ON/OFF CNTL
POWER SUPPLY ERROR (OVER/UNDER VOLTAGE)
STORE COMPLETE
INHIBIT MAIN STORE
DU PWR ON DISC
ELAPSED TIME INDICATOR (XXXX HRS)
EMI FILTER 28V
GNC
SM
PL
MF SW SELECT DISC
DEU/DU PWR ON DISC

POWER ON INTERRUPT
XMIT END
MEMORY PARITY ERROR
SEV MASK
SEV REG
KBA-A ERROR
KBA-B ERROR

BIT NO	HARDWARE STATUS REGISTER NO 2
0	LOGIC 1
1-7	SPARE
8	CPU SOFTWARE FAIL
9	KBA-A ERROR (CRITICAL BITE)
10	KBA-B ERROR (CRITICAL BITE)
11	MIA ECHO CHECK ERROR
12	MIA PARITY ERROR
13	MIA MANCHESTER ERROR
14	MIA BIT COUNT ERROR
15	MIA CMD ERROR (OR OF 12-14)

PROM FOR INITIALIZATION

FUNCTION	WORDS
LOAD PATTERN	22
MODE STATUS	12
BITE STATUS	20
MEMORY FILL	16
MEMORY DUMP	34
MASTER RESET	6
SUM CHECK	10
DECODE LOGIC	15
SEQUENCING LOGIC	30
HARDWARE OVERHEAD	10
LOW CORE	25
TOTAL	200

IPL HAS BEEN PERFORMED
IPL ERROR
IPL CIRCUIT CHECK ERROR

BIT NO	HARDWARE STATUS REGISTER NO 1 (SOFTWARE READS REGISTER TO FORM HARDWARE STATUS WORD 1 FOR POLL RESPONSE)
0	LOGIC 1
1	IPL HAS BEEN PERFORMED (DEU UNDER PROM CONTROL)
2	IPL ERROR (DETECTED BY PROM OR CYCLIC CIRCUIT CHECK)
3	IPL CIRCUIT CHECK ERROR (NOT USED)

BITS 0-3

CPU SOFTWARE FAIL
SEV MASK
CPU MEMORY PARITY ERROR

BIT NO	HARDWARE STATUS REGISTER NO 3
0	LOGIC 1
1	DU DEFLECTION ERROR
2	DU VIDEO ERROR
3	DU PHOS PROTECT (NOT USED)
4	SPARE
5	DU FILAMENT ERROR
6	DU TEMPERATURE ERROR
7-14	SPARE
15	DU POWER SUPPLY ERROR

RC TIMERS (2) — DISPLAY WRAP ERROR
INITIALIZE DATA FLOW
INITIALIZE TEST
CPU GOOD
DISPLAY WRAP GOOD
CPU MEMORY PARITY ERROR (BIT 15 OF STATUS WORD)
RESET STATUS REGISTER
READ STATUS REGISTERS
BITE STATUS DATA
RESET CONTROL

MSS KEYBOARD
LEFT KEYBOARD
RIGHT KEYBOARD
KEYBOARD IS WIRED SUCH THAT A SINGLE SIGNAL WIRE FAILURE WILL CAUSE LOSS OF NO MORE THAN ONE KEY'S FUNCTION TO ITS KEYBOARD ADAPTER
SW 32
SW 2
SW 1 (TYP 1 OF 32)
CHAN A
CHAN B
RETURN
TO DEU 4 ADAPTER A (32 LINES)
TO DEU 1 ADAPTER B (32 LINES)
TO DEU 3 ADAPTER B (32 LINES)
TO DEU 3 ADAPTER A (32 LINES)
TO DEU 2 ADAPTER A (32 LINES)
TO DEU 4 GRD (2 LINES)
TO DEU 1 GRD (2 LINES)
TO DEU 3 GRD (2 LINES)
TO DEU 3 GRD (2 LINES)
TO DEU 2 GRD (2 LINES)
A SINGLE BREAK IN ONE GRD WIRE WILL CAUSE NO LOSS OF FUNCTION

FAULT SUMM	SYS SUMM	MSG RESET	ACK
CPC/ CNT	A	B	C
I/O RESET	D	E	F
ITEM	1	2	3
EXEC	4	5	6
OPS	7	8	9
SPEC	—	0	+
RESUME	CLEAR	•	PRO

KB ADAPTER A
1 MHZ CLOCK
PUSHBUTTON DETECT
DEBOUNCE (4 MILLI-SECOND DELAY)
KEY DEPRESSION
BREAK-IN
RESET CONTROL
BITE (9 MILLI-SECOND TIMEOUT)
STROBE
32 SWITCH RECEIVERS
4 ENCODERS (8→3)
CLR
3 REGISTERS (4 BITS EACH)
12 TRI-STATE BUS DRIVERS
+V

KB ADAPTER B
(same as KB ADAPTER A)

RESET
XMIT DATA AVAILABLE
TRANSMIT ENABLE
DATA BUS BUSY
RECEIVER ENABLE
XMIT ENABLE AND XMIT DATA AVAILABLE CONTROLS

MIA
RECEIVE NRZ DATA
RCVR SHIFT CLOCK
BIT COUNT
NONVALID
MANCHESTER PARITY ERROR
RCV CMD SYNC
END OF WORD
RECEIVE DATA BUS ACTIVE
XMIT SHIFT CLK
XMIT NRZ DATA
RECEIVER
MANCHESTER TO NRZ AND VALIDATION
TIMING AND CONTROL LOGIC
TIMING AND CONTROL
NRZ TO MANCHESTER PLUS PARITY AND SYNC
TRANSMITTER
ERROR CHECK CONTROLS/WRAP REGISTER CONTROL
WORD COUNTER/ MULTIPLEXER
SEV
REGISTER 1 AND CONTROLS
REGISTER 2 AND CONTROLS
REGISTER 3 AND CONTROLS
5 BITS
9 BITS
SEV BITS (101)
ADDRESS COMPARE
DEU ADDRESS ID
DEU IUA
BREAK-IN AND INTERRUPT CONTROLS
DATA FLOW INTERFACE
PARITY ERROR
MANCHESTER ERROR
BIT COUNT ERROR
ECHO CHECK ERROR
CMD ERROR
2 MHZ (CL)
TRANSMIT CMD SYNC
+5V
16 MHZ
STRAP BACK MIA ID CODE 10
LSB
MSB

DBC DK 4
DBC DK 1
DBC DK 2
DBC DK 3

MIA DATA IN
DISCRETE DATA IN
MF SW SEL DISC
DISCRETE INPUT CONTROL
RIGHT ADAPTER KB WORD B BREAK-IN
LEFT ADAPTER KB WORD A BREAK-IN
KB DATA TRANSFER READY (STROBE)
DISCRETE DATA IN BREAK-IN
MIA DATA OUT BREAK-IN
MIA DATA IN BREAK-IN
CMD WORD STORED INTERRUPT
LAST WORD RECEIVED INTERRUPT
LAST WORD TRANSMITTED INTERRUPT
MIA ADAPTER WRAP BREAK-IN
POWER ON INTERRUPT (POI)

TRANSMIT DIRECT OUT
RECEIVER ENABLE
KB DATA IN
MIA DATA OUT
CENTRAL PROCESSING UNIT
GATE CONTROL SIGNALS
DISPLAY REFRESH DATA ADDRESS
DSPLY REFRESH DATA (FORMAT CNTL WORDS)
DISPLAY REFRESH DATA
KB DATA IN
MIA DATA IN
DISCRETE DATA IN
STORE COMPLETE
POI LATCH
DATA FLOW GATES
PRIORITY:
1. MIA DATA
2. DISPLAY REFRESH
3. DISCRETE DATA (MAJ FUNC)
4. KEYBOARD DATA
HARDWARE ADDRESSES
GATE CONTROL SIGNALS
ACKNOWLEDGE
DISPLAY DATA BREAK-IN
SYMBOL GENERATOR MEMORY ACCESS CONTROL
KEYBOARD AND DISCRETE MEMORY ACCESS CONTROL
MIA MEMORY ACCESS CONTROL
MIA ADAPTER WRAP ERROR AND POWER ON INTERRUPT AND TIMER INTERRUPT MEMORY ACCESS CONTROL

MEMORY
8192 WORDS X 16 BITS EACH

STARTING ADDRESS	MEMORY ALLOCATION	NO OF 16 BIT WORDS
0	LOW CORE	256
256	(CRITICAL) FORMAT BUFFER	3656
3912	FORMAT CHECKSUM	1
3913	DEU CONTROL PROGRAM	2675
6588	MESSAGE LINE BUFFER	50
6638	DISPLAY BUFFER	1527
8165	I/O BUFFER	27
	TOTAL	8192

24 MHZ OSCILLATOR
COUNT DOWN
16 MHZ
1 MHZ
CPU AND MEMORY CLOCKS
12 MHZ (MEMORY)
8 MHZ (CPU)
16 MHZ (MIA)
REFRESH COUNTER
TIMER INTERRUPT (18 MS)
RC TIMER
TIMER INTERRUPT (18 MS)
OSCILLATOR ERROR
REQUEST LOGIC 55 HZ
SYMBOL GEN REFRESH BUS ACTIVE STATUS (NOMINALLY ACTIVE)
REFRESH ERROR
RC TIMER

DATA ADDRESS REGISTER 16 BITS
FEATURE CONTROL 10 BITS
TO SYMBOL GENER
SIN/COS PARITY
ROTATION CONTROL 12 BITS
POSITION CONTROL 11 BITS
X Y
CHARACTER F
CHARACTER CONTROL 14 BITS
CIRCLE GEN CONTROL 10 BITS
VECTOR GEN CONTROL 12 BITS
X Y TRANSLATE CONTROL 11 BITS
ANALOG CONTROL 9 BITS
REPEAT CONTROL 11 BITS
INTENSITY CONTROL 7 BITS
INTENSITY PARITY ERROR

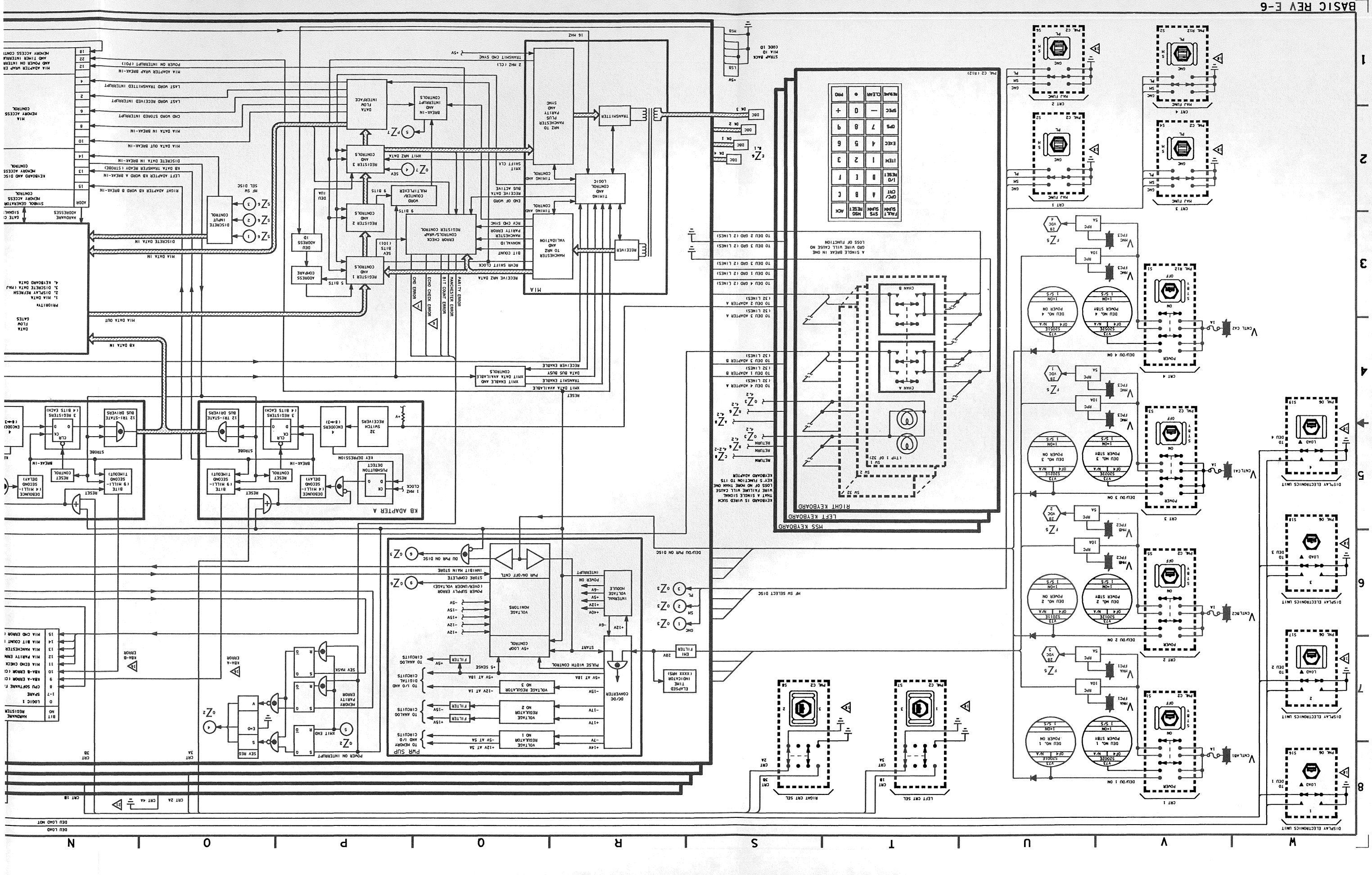
MIA
MSS KEYBOARD
LEFT KEYBOARD
RIGHT KEYBOARD
KB ADAPTER A
DATA FLOW INTERFACE
BREAK-IN AND INTERRUPT CONTROLS
TRANSMITTER
RECEIVER
MANCHESTER TO NRZ
NRZ TO MANCHESTER PLUS PARITY AND SYNC
TIMING AND CONTROL LOGIC
REGISTER 1 AND CONTROLS
REGISTER 2 AND CONTROLS
REGISTER 3 AND CONTROLS
ERROR CHECK CONTROL/ REGISTER CONTROL
MULTIPLEXER
DISCRETE INPUT CONTROL
ADDRESS COMPARE
ADDRESS ID
MANCHESTER PARITY ERROR
MANCHESTER BIT COUNT
MANCHESTER NONVALID
RECEIVE DATA
END OF WORD
RCV CMD SYNC
BIT COUNT
RCVR SHIFT CLOCK
RECEIVE NRZ DATA
XMIT SHIFT CLK
XMIT NRZ DATA
TRANSMIT CMD SYNC
2 MHZ (CL)
16 MHZ
XMIT DATA AVAILABLE
TRANSMIT ENABLE
RECEIVER ENABLE
DATA BUS BUSY
XMIT ENABLE AND XMIT DATA AVAILABLE CONTROLS
RESET
CMD ERROR
ECHO CHECK ERROR
BIT COUNT ERROR
MANCHESTER ERROR
PARITY ERROR
MIA DATA IN
MIA DATA OUT
DISCRETE DATA IN
KB DATA IN
KB DATA OUT
ADDR
DISCRETE INPUT CONTROL
HF SW SEL DISC
DEU ID
DEU LOAD NOT
DEU LOAD
POWER ON INTERRUPT
KB-A ERROR
KB-B ERROR
MEMORY PARITY ERROR
SEV MASK
SEV REG
STROBE
BUS DRIVERS
ENCODERS
SWITCH
KEY DEPRESSION
PUSHBUTTON DEBOUNCE
RESET CONTROL
DEBOUNCE (4 MILLI-SECOND DELAY)
BIT (9 MILLI-SECOND TIMEOUT)
PWR SUP
PWR ON/OFF CNTL
INTERNAL VOLTAGE MODULE
VOLTAGE MONITORS
+5V LOOP CONTROL
PULSE WIDTH CONTROL
DC/DC CONVERTER
VOLTAGE REGULATOR NO 1
VOLTAGE REGULATOR NO 2
VOLTAGE REGULATOR NO 3
ELAPSED TIME INDICATOR (XXXX HRS)
EMI FILTER
DU PWR ON DISC
STORE COMPLETE
INHIBIT MAIN STORE
POWER SUPPLY ERROR (OVER/UNDER VOLTAGE)
DEU/DU PWR ON DISC
DEU/DU 4 ON
DEU/DU 3 ON
DEU/DU 2 ON
DEU/DU 1 ON
DEU NO. 4 POWER ON
DEU NO. 3 POWER ON
DEU NO. 2 POWER ON
DEU NO. 1 POWER ON
A SINGLE BREAK IN ONE GND WIRE WILL CAUSE NO LOSS OF FUNCTION
KEYBOARD IS WIRED SUCH THAT A SINGLE OPEN WIRE FAILURE WILL CAUSE LOSS OF NO MORE THAN ONE KEYBOARD FUNCTION TO 115
RIGHT CRT SEL
LEFT CRT SEL
CRT 1
CRT 2
CRT 3
CRT 4
CRT 1A
CRT 2A
CRT 3A
CRT 4A
CRT 1B
CRT 2B
CRT 3B
CRT 4B
DISPLAY ELECTRONICS UNIT
POWER
LOAD
MAJ FUNC
PWR SUPPLY
1 2 3 4 5 6 7 8
U V W S T R O P O N

DATE: 09/25/92 | MARK: VEM | VERSION: INS-9

1 2 3 4 5 6 7 8

A B C D E F G H I J

BACKUP FLIGHT CONTROLLER PWR SUPPLY 2-B
BACKUP FLIGHT CONTROLLER PWR SUPPLY 1-B
BACKUP FLIGHT CONTROLLER PWR SUPPLY 3-A
BACKUP FLIGHT CONTROLLER PWR SUPPLY 2-A
BACKUP FLIGHT CONTROLLER PWR SUPPLY 1-A
5A
20A
RPC
ESS2CA
FD
FPC3
FPC2
FPC1
PNC
PNA
PNB
CNTL
CA1
AB3
OLD CPU 5 RPC B
OLD CPU 4 RPC B
OLD CPU 3 RPC B
OLD CPU 2 RPC B
OLD CPU 1 RPC B
GPC 5
GPC 4
GPC 3
GPC 2
GPC 1
POA DPS GPC 5 RPC B
POA DPS GPC 4 RPC B
POA DPS GPC 3 RPC B
POA DPS GPC 2 RPC B
POA DPS GPC 1 RPC B
1=ON
1 S/S
OF2
N/A
V76
X43728
X43728E
X43716
X43716E
X43704
X43704E
X43692
X43692E
ESS3AB
OLD CPU 5 RPC C
OLD CPU 4 RPC C
OLD CPU 3 RPC C
OLD CPU 2 RPC C
OLD CPU 1 RPC C
GPC 5
GPC 4
GPC 3
GPC 2
GPC 1
POA DPS GPC 5 RPC C
POA DPS GPC 4 RPC C
POA DPS GPC 3 RPC C
POA DPS GPC 2 RPC C
POA DPS GPC 1 RPC C
X43728
X43716
X43704
X43692
X43680
X43680E
X43668
X43668E
X43656
X43656E
MDM FA 1
MDM FA 2
MDM FF 1
MDM FF 2
MDM FF 3
MDM FF 4
MDM LR 01
MDM LR 02
MDM LL 01
MDM LL 02
SRB
ORBITER
MSRB
LSRB
DBIA 1
DBIA 2
2A
CNTLA82
CNTLB82
CNTLA83
CNTLB83
CNTLA81
CNTLB81
CNTLA82
CNTLB82
CNTLA83
CNTLB83
MNA
MNB
MNC
APC1
APC2
APC3
APC4
APC5
APC6
MN B
MN C
MNB
015
PNL 015A B
PNL 015B B
CB12
CB13
3A
FWD EVENT TIMER
AFT MISSION TIMER
MASS MEMORY 2
DISPLAY ELECTRONICS UNIT 2
DISPLAY ELECTRONICS UNIT 3
DISPLAY ELECTRONICS UNIT 4
DISPLAY UNIT 4
7.5A
10A
PNL 016A B
PNL L12
CB01
CB02
CABLE2
AUX
PL
TIMING BUFFER
ORBITER TIMING BUFFER
016

DATE	NAME	VERSION
DATE: 08/31/92	NAME: SEW	VERSION: BPT: 7
DATE: 09/09/92	NAME: JMB	VERSION: BPT: 8
DATE: 09/25/92	NAME: VEM	VERSION: INK: 9

Q P O N M L K J I H

8 7 6 5 4 3 2 1

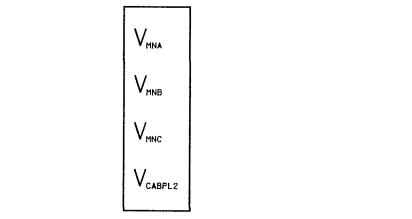

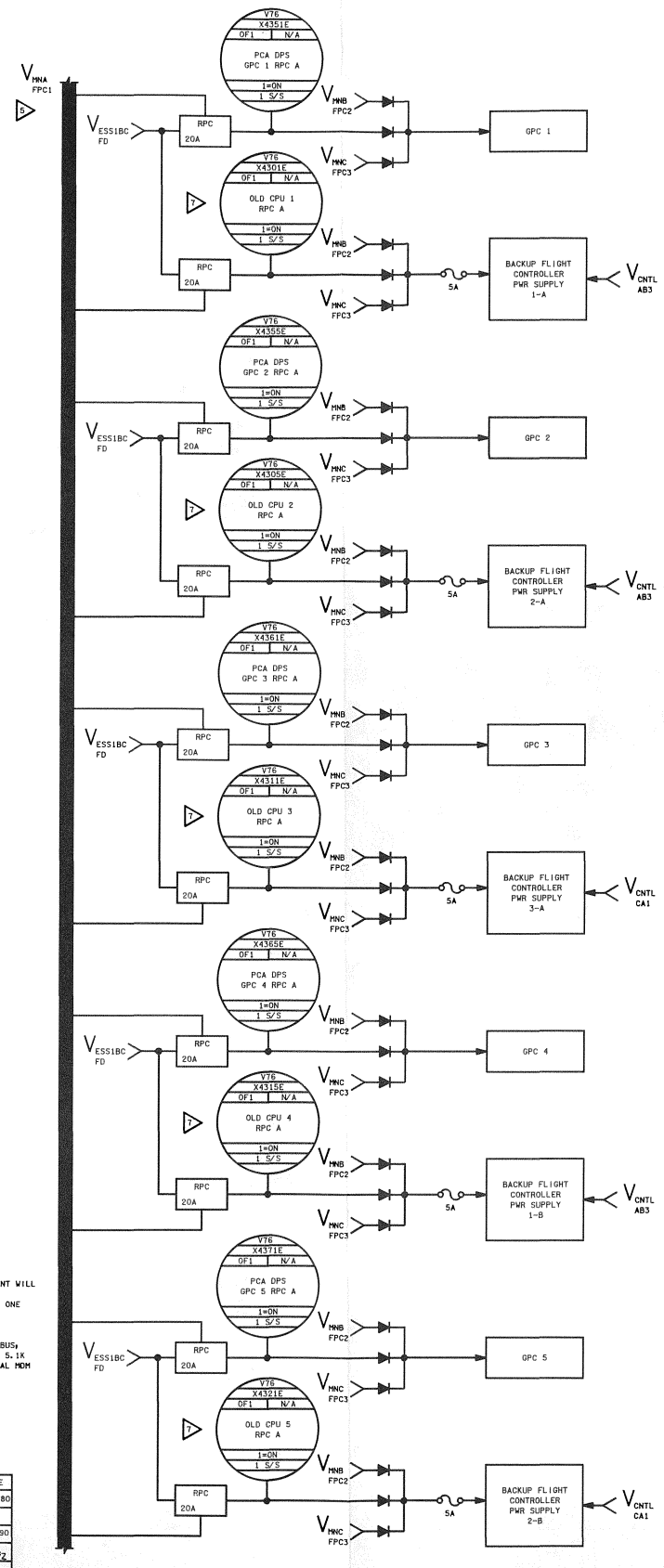

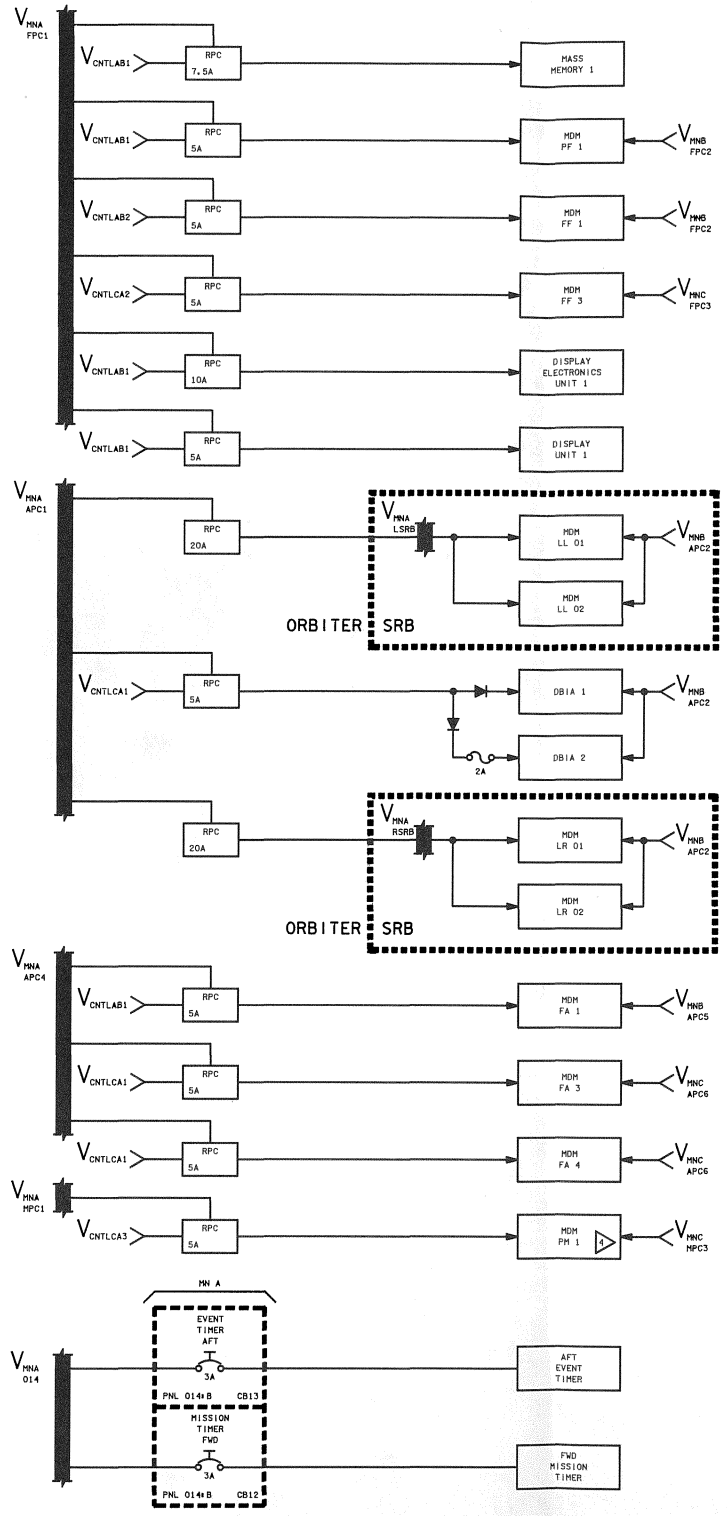

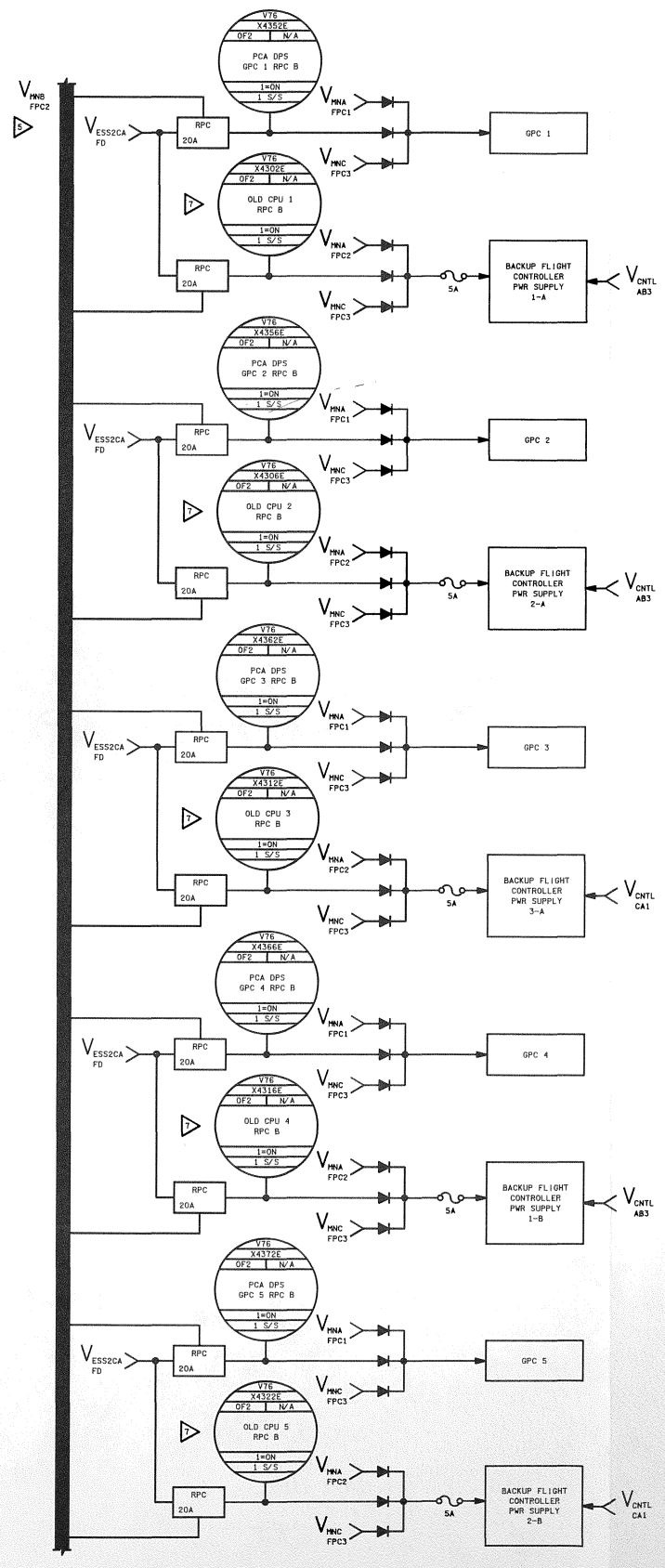

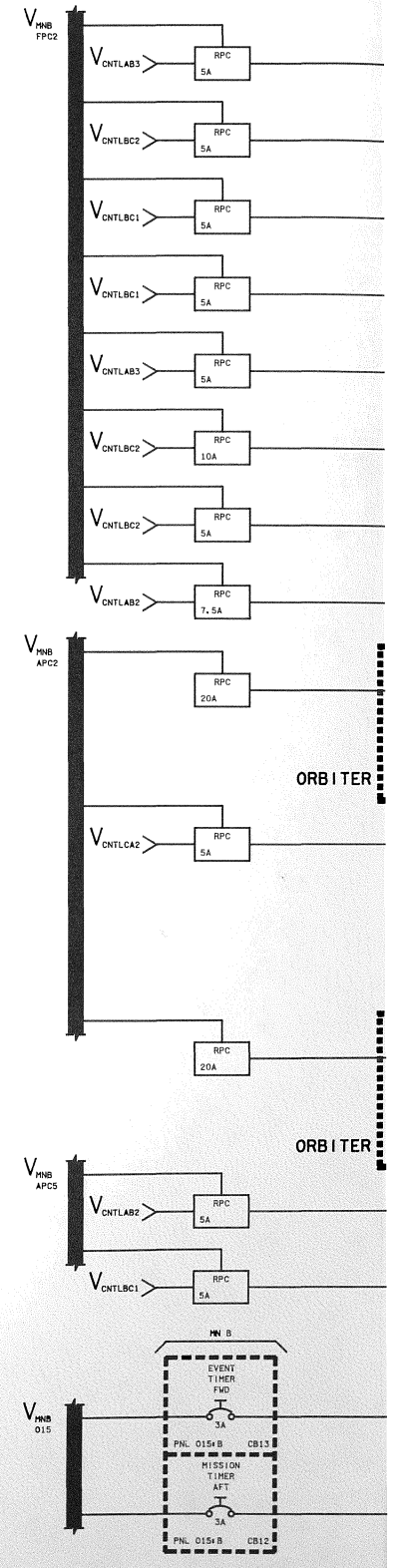

▷ THE TELEMETRY TO THE BFC MODULES CAN BE VIEWED ON MSK 1367 DPS RPC'S 1, THE AP101S GPC'S USE THE OLD IOP POWER FEED. THE OLD CPU RPC'S ONLY SUPPLY POWER TO THE BFC

▷ POWER TO THIS BUS IS PROVIDED BY V_{MNA} MPC1 OR V_{MNB} MPC2 SELECTED VIA A SWITCH (S25) ON PANEL R1

▷ THE DIODES ARE PHYSICALLY LOCATED IN THE FPC AS LISTED BELOW

GPC 1	FPC 1
GPC 2	FPC 2
GPC 3	FPC 3
GPC 4	FPC 1
GPC 5	FPC 2

SEE DRAWING 8.11 FOR MORE DETAILS

▷ MDM PM 1 DOES NOT CURRENTLY EXIST

3. CAUTION
POWER LOSS DRAWINGS SHOULD NOT BE USED FOR SUBSYSTEM TROUBLESHOOTING OR RECONFIGURATION. FOR DETAILS OF SWITCH WIRING, REFERENCE APPROPRIATE SUBSYSTEM DRAWING

2. THIS IS A BUS LOSS DRAWING. THEREFORE A PIECE OF DPS EQUIPMENT WILL APPEAR AS MANY TIMES AS THERE ARE SUPPLY AND CONTROL BUSSES AFFECTING IT. THE ARTWORK FOR A SWITCH CONTROLLING MORE THAN ONE ESSENTIAL BUS WILL APPEAR WITH EACH CONTACT

NOTES: 1. TELEMETRY BEFORE THE RPC IS SHOWN WITH ASSOCIATED ESSENTIAL BUS; TELEMETRY AFTER THE RPC IS SHOWN WITH ASSOCIATED MAIN BUS; A 5.1K RESISTOR IS BETWEEN THE TELEMETRY PICK OFF AND THE OPERATIONAL MDM

7 DPS PWR 1

NATIONAL AERONAUTICS AND SPACE ADMINISTRATION LYNDON B. JOHNSON SPACE CENTER HOUSTON, TEXAS		SIGNATURE	DATE
	DSGN	LINDA DUMIS	4/17/80
DPS ELECTRICAL POWER LOSS	DR		
	ENGR	ROBERT J. WALTON	8/24/90
	APP	[signature]	10/9/92
DWG NO 8.7	SPACE SHUTTLE APP		
	ALL OMNIPLAN	[signature]	10-13-92
SHEET 1 OF 3 PAGE 93.5 X 34	LTR E	PCN 2	

BASIC REV E-2

DATE: 08/28/92	NAME: VEM	VERSION: BPT.7
DATE: 09/09/92	NAME: JDF	VERSION: BPT.8
DATE: 09/25/92	NAME: JMB	VERSION: INK.7

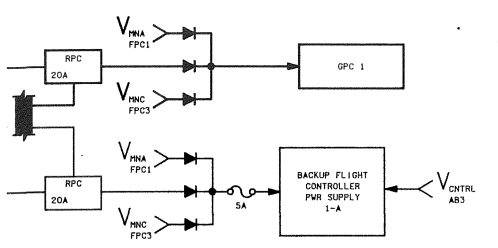

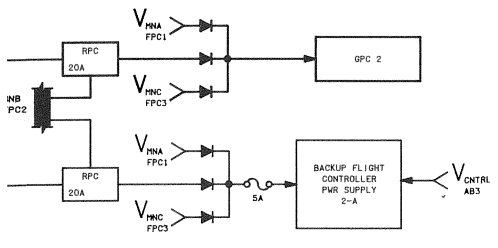

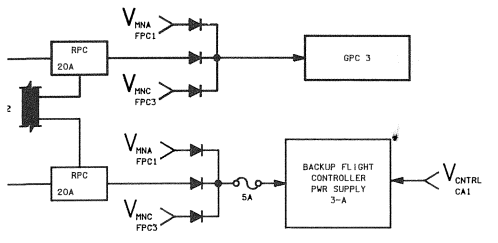

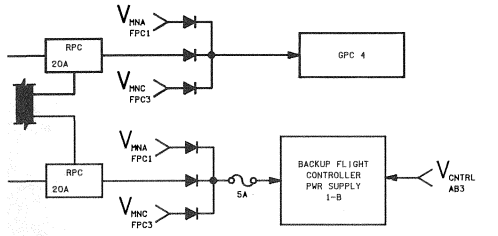

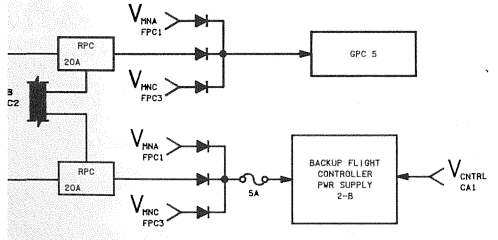



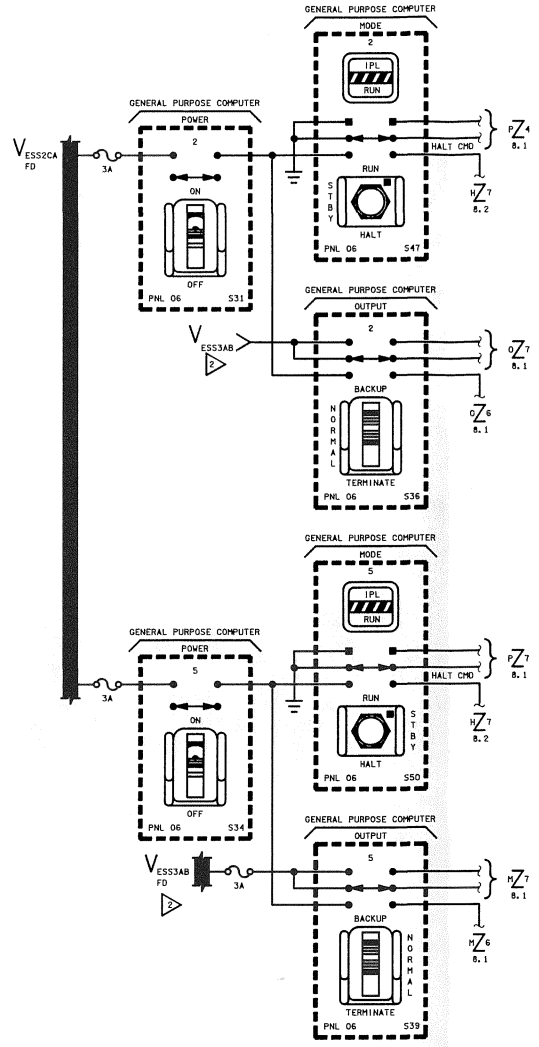

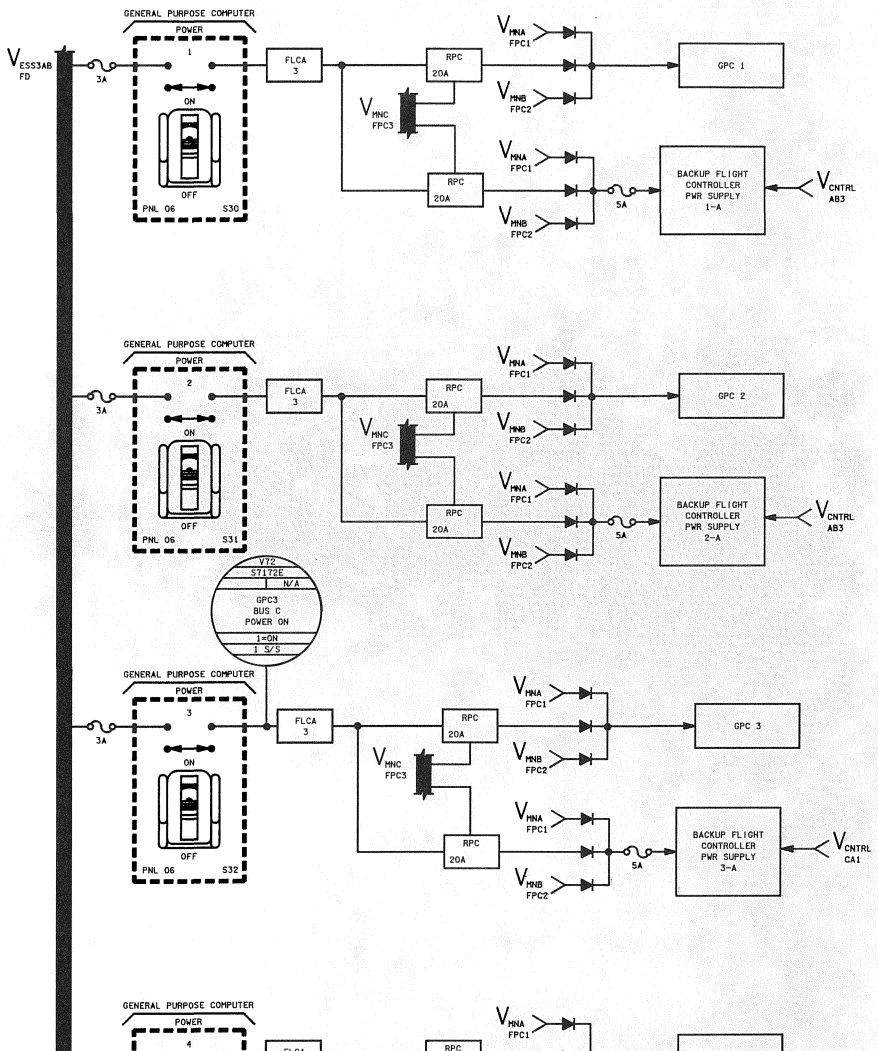

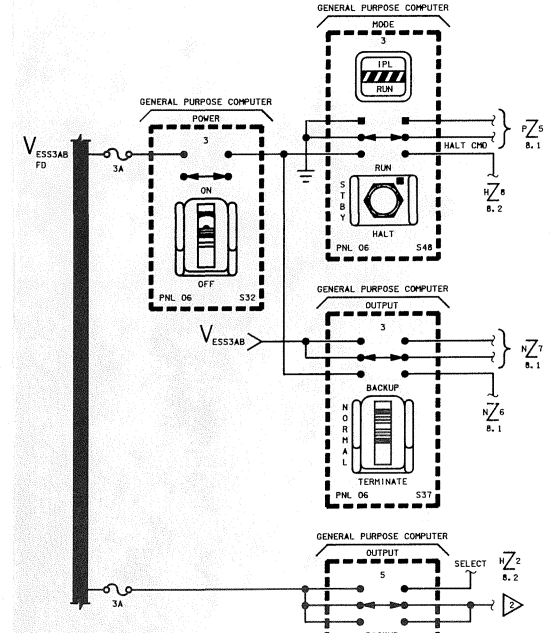

V_{ESS1BC}
V_{ESS2CA}
V_{ESS3AB}

5. SEE DRAWING 8.4 FOR TELEMETRY WIRING DETAILS
4. GPC STATUS CIRCUIT BREAKER IS 3A FOR OV-102
3. CAUTION: POWER LOSS DRAWINGS SHOULD NOT BE USED FOR SUBSYSTEM TROUBLESHOOTING OR RECONFIGURATION
2. V_{ESS3AB} SUPPLIES POWER TO GPC OUTPUT SWITCHES BEGINNING WITH GPC 5 AND CONTINUING ON THRU OUTPUT SWITCH OF GPC 1

NOTES:
1. IMPORTANT: LOSS OF ESS BUS PWR TO GPC POWER SW. RESULTS IN PWR LOSS TO GPC MODE AND TERMINATE FUNCTION OF THE GPC OUTPUT SWITCH

7 DPS PWR 2

SIGNATURE		DATE	NATIONAL AERONAUTICS AND SPACE ADMINISTRATION LYNDON B. JOHNSON SPACE CENTER HOUSTON, TEXAS
DSGN	LINDA DUMIS	4/21/80	
DR			DPS ELECTRICAL POWER LOSS
ENGR	ROBERT J. WALTON	8/24/90	
ENGR		10/6/92	
APP	W. D. Bennington	10/6/92	
APP			SPACE SHUTTLE / ALL
OMNIPLAN	S.K. Rinehart	10-13-92	DWG NO 8.7
LTR E	PCN 2		93.5 X 34 PAGE SHEET 2 OF 3

BASIC REV E-2

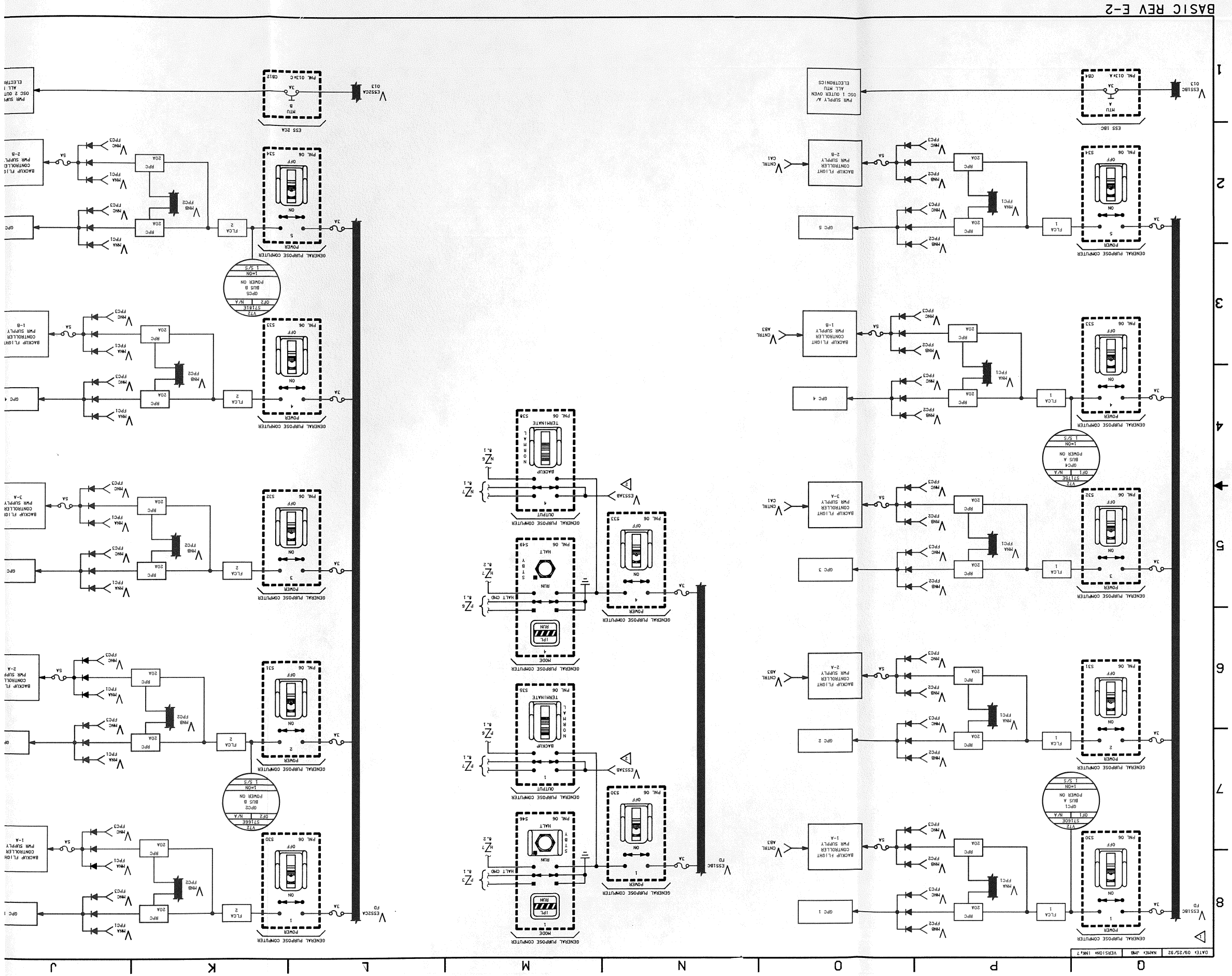
BASIC REV E-2
GENERAL PURPOSE COMPUTER
BACKUP FLIGHT CONTROLLER PWR SUPPLY 1-A
BACKUP FLIGHT CONTROLLER PWR SUPPLY 1-B
BACKUP FLIGHT CONTROLLER PWR SUPPLY 2-A
BACKUP FLIGHT CONTROLLER PWR SUPPLY 2-B
BACKUP FLIGHT CONTROLLER PWR SUPPLY 3-A
BACKUP FLIGHT CONTROLLER PWR SUPPLY 3-B
BACKUP FLIGHT CONTROLLER PWR SUPPLY 4-A
BACKUP FLIGHT CONTROLLER PWR SUPPLY 4-B
PWR SUPPLY A/ OSC 1 OUTER OVEN ALL MTU ELECTRONICS
ESS 1BC
ESS 2CA
ESS1BC FD
ESS2CA FD
ESS3AB
ESS1BC FD
GPC 1
GPC 2
GPC 3
GPC 4
GPC 5
GENERAL PURPOSE COMPUTER
POWER
MODE
OUTPUT
TERMINATE
BACKUP
HALT
RUN
STBY
IPL
NORMAL
FLCA 1
FLCA 2
RPC
20A
MNA
MNB
MNC
FPC1
FPC2
FPC3
FPC4
FPC5
FPC6
PNL 06
ON
OFF
1
2
3
4
5
6
7
8
J
K
L
M
N
O
P
Q

DATE: 09/20/88	NAME: MDU	VERSION: INK 4
DATE: 08/17/90	NAME: LAM	VERSION: BPT 5
DATE: 08/24/90	NAME: MFB	VERSION: INK 5

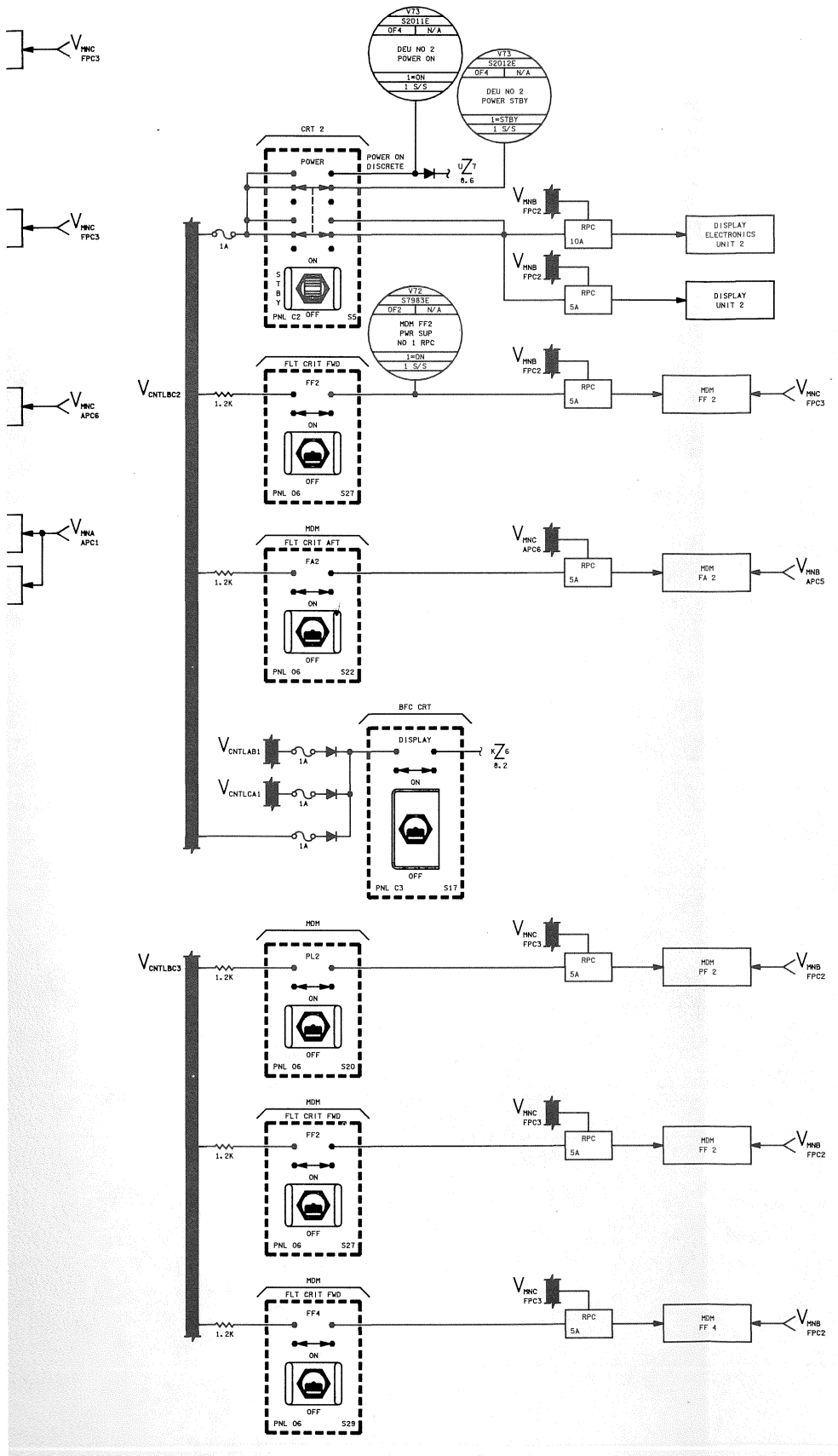

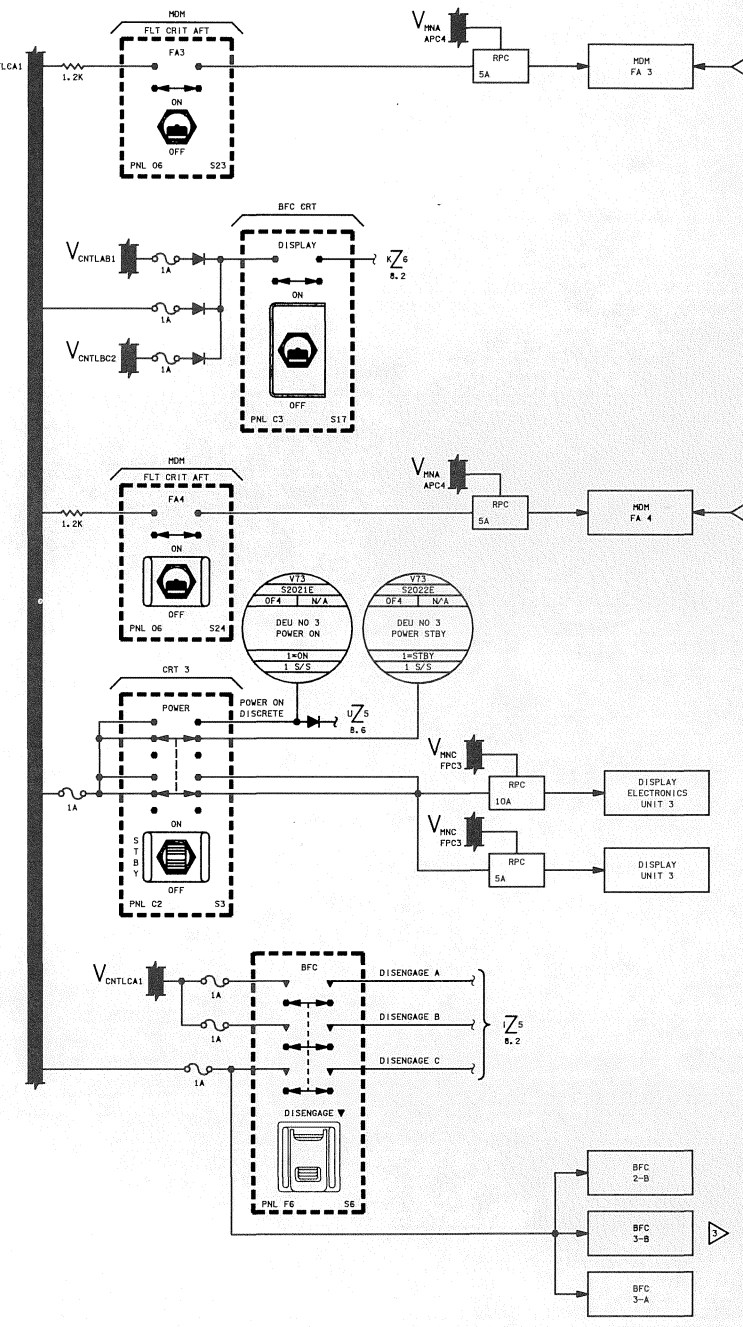

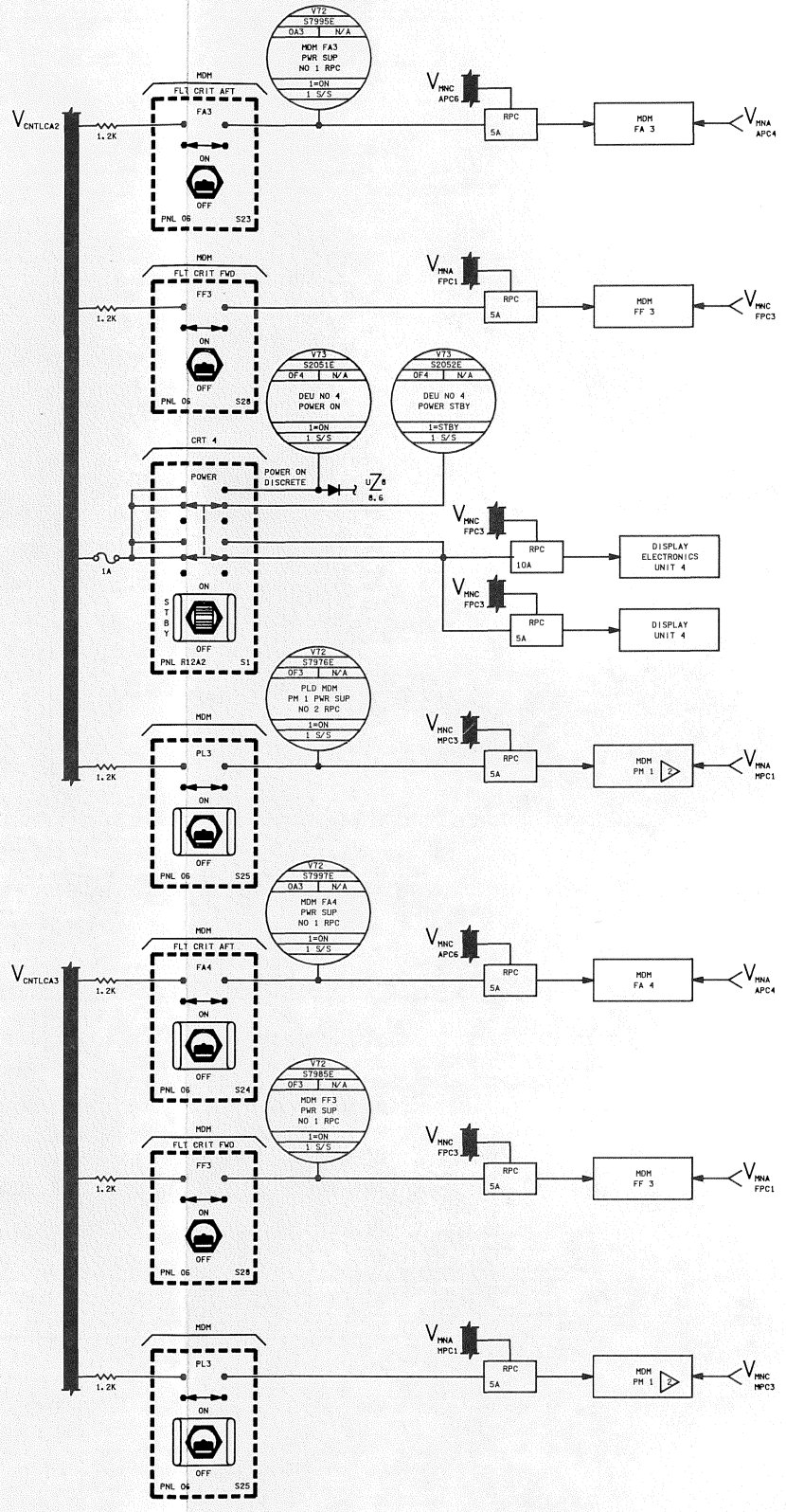

$V_{CNTLAB1}$
$V_{CNTLAB2}$
$V_{CNTLAB3}$
$V_{CNTLBC1}$
$V_{CNTLBC2}$
$V_{CNTLBC3}$
$V_{CNTLCA1}$
$V_{CNTLCA2}$
$V_{CNTLCA3}$

▷ CONTROL BUS SUPPLIES POWER ONLY TO SPECIFIC BFC (BACKUP FLIGHT CONTROLLER) ENGAGE LOGIC CIRCUITRY. SEE DRAWING 8.7 DPS POWER 1 FOR MAIN BUS POWER TO BFC MODULES

▷ MDM-PM 1 DOES NOT CURRENTLY EXIST

NOTES: 1. CAUTION: POWER LOSS DRAWINGS SHOULD NOT BE USED FOR SUBSYSTEM TROUBLESHOOTING OR RECONFIGURATION

7 DPS PWR 3

SIGNATURE		DATE	NATIONAL AERONAUTICS AND SPACE ADMINISTRATION LYNDON B. JOHNSON SPACE CENTER HOUSTON, TEXAS
DSGN	LINDA DUMIS	4/22/80	
DR			
ENGR	ROBERT J. WALTON	8/24/90	DPS ELECTRICAL POWER LOSS
ENGR		9/18/90	
APP			
APP			
OMNIPLAN	S. K. Kimball 9-7-90		SPACE SHUTTLE / ALL / DWG NO 8.7
LTR E	PCN		104.5 X 34 PAGE SHEET 3 OF 3

BASIC REV E

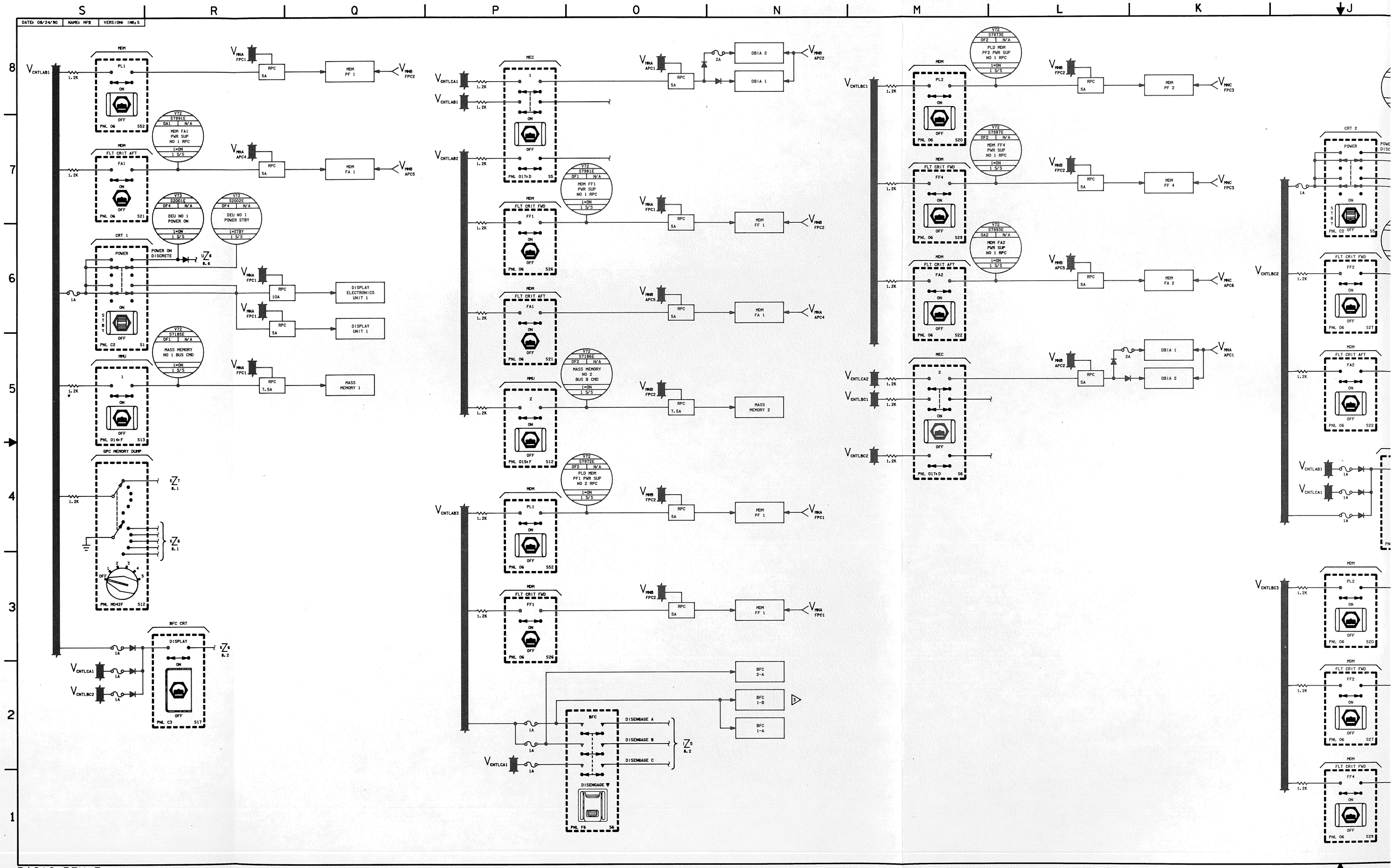
DATE: 08/24/90
NAME: MFB
VERSION: INK:5
S
R
Q
P
O
N
M
L
K
J
8
7
6
5
4
3
2
1
MDM
PL1
FLT CRIT AFT
FA1
CRT 1
POWER
MMU
GPC MEMORY DUMP
BFC CRT
DISPLAY
MDM PF 1
MDM FA 1
DISPLAY ELECTRONICS UNIT 1
DISPLAY UNIT 1
MASS MEMORY 1
MEC
FLT CRIT FWD
FF1
MDM FF 1
MASS MEMORY 2
DBIA 2
DBIA 1
BFC 2-A
BFC 1-B
BFC 1-A
BFC
DISENGAGE A
DISENGAGE B
DISENGAGE C
DISENGAGE
PL2
FF4
FA2
MDM PF 2
MDM FF 4
MDM FA 2
CRT 2
FF2
FF4
POWER ON DISCRETE
DEU NO 1 POWER ON
DEU NO 1 POWER STBY
MDM FA1 PWR SUP NO 1 RPC
MASS MEMORY NO 1 BUS CMD
MDM FF1 PWR SUP NO 1 RPC
MASS MEMORY NO 2 BUS B CMD
PLD MDM PF1 PWR SUP NO 2 RPC
PLD MDM PF2 PWR SUP NO 1 RPC
MDM FF4 PWR SUP NO 1 RPC
MDM FA2 PWR SUP NO 1 RPC
BASIC REV E

MULTIPLEXER/DEMULTIPLEXER

A/D CONVERTER 2 (SECONDARY)

A/D CONVERTER 1 (PRIMARY)

SEQUENCE CONTROL UNIT (SCU) 2 (SECONDARY)

SEQUENCE CONTROL UNIT (SCU) 1 (PRIMARY)

CONTROL STORE (512-WORD)

CONTROL STORE ADDRESSING LOGIC

INSTRUCTION CONTROL DECODE

SEQUENCE FROM FORMAT

SEQUENCE PARITY CHECK LOGIC

SEQ MUX

CONDITION SET DECODE

BIT STATUS REGISTER LOGIC

MEMORY CONTROL LOGIC

BSR READ/LOAD SELECT LOGIC

SCU OUT BUS MERGE

BUS SELECT DECODE

IOM SELECT LOGIC

IOM REPLY MULTIPLEXER

MDM SYSTEM CLOCK

MDM I/O CONFIGURATION

DIGITAL RESPONSE DATA WORD FORMAT

CHECK BITS

COMMAND DATA WORD TRANSFER FORMAT

RESPONSE DATA WORD REQUEST FORMAT

CHECK-BIT VERIFICATION

IOM TASK

COMMAND DATA

IOM SERIAL DATA

SCU IN BUS MULTIPLEXER

SCU IN BUS MERGE

SCU INTERNAL BUS (5-BIT PARALLEL)

SCU IN BUS GATING CONTROL

SCU OUT BUS GATING CONTROL

SCU OUT BUS MERGE

BSR STATUS READ SELECT

BSR LOAD

SCU BUSY (TO SCU CROSS STRAP)

SCU 2 BUSY

SCU 1 BUSY (TO SCU CROSS STRAP)

SCU TO IOM 'SCU OUT BUS' LINE

IOM TO A/D CONV ANALOG LINES

SCU TO IOM 'SCU SELECT' LINES

IOM TO SCU 'IOM REPLY' LINES

IOM TO SCU 'SCU IN BUS' LINES

SCU TO IOM 'SCU IN BUS' LINES

SCU INTERNAL BUS GATING CONTROL

SCU OUT BUS GATING CONTROL

SCU IN BUS GATING CONTROL

SCU INTERNAL BUS SELECT

SCU OUT BUS SELECT

SCU IN BUS SELECT

SCU OUT BUS SEL

SCU OUT BUS REQ

SCU IN BUS REQ

SCU IN BUS LOAD

SCU OUT BUS LOAD

SCU IN BUS SELECT

SCU OUT BUS SELECT

SCU IN BUS SELECT

SCU OUT BUS SELECT

SCU IN BUS SELECT

SCU OUT BUS SELECT

CORE POWER SUPPLY 1

CORE POWER SUPPLY 2

FIRST-STAGE REGULATION

BACKUP REG

PULSE-WIDTH MODULATED REG

SECOND-STAGE REG (PS MOD 1)

PWR BUS 2 REG

PWR BUS 1 REG

+10V REG (PS MASTER)

CHOPPER INPUT (50KHZ)

PS CNTL

MIA PORT 1 (PRIMARY)

MIA PORT 2 (SECONDARY)

MANCHESTER ENCODER

MANCHESTER DECODER

MIA ERROR DETECT

MDM ADDRESS CHECK

RECEIVER SYNC LOGIC

RESPONSE SYNC LOGIC

PROGRAM-CONTROLLED TIMER LOGIC

CONTROL STORE ADDRESSING LOGIC

INSTRUCTION CONTROL DECODE

CONDITION SENSE MULTIPLEXER

REGISTER FILE

SEQUENCE PROM FORMAT

SEQUENCE PARITY CHECK LOGIC

POWER INTERRUPT MONITOR LOGIC

CYCLIC COMPARE LOGIC

SCU BIT TEST

PS BITE CNTL

PROM PWR RESET

SCU RESET

CHECK PATTERN (CPT)

END-OF-WORD

CMD SYNC

XMIT SHIFT CLOCK

RCVR ENABLE

XMIT ENABLE

XMIT DATA AVAILABLE

TRANSMIT ENABLE

DEAD STOP CLEAR (DSC)

RESET

SCU TO MIA DATA

MIA TO SCU DATA

SCU TO MIA CONTROL SIGNALS

MIA TO SCU CONTROL SIGNALS

SCU TO MIA RCVR ENABLE SIGNALS

MIA TO SCU RCVR ENABLE SIGNALS

SCU TO MIA XMIT CLOCK SIGNALS

MIA TO SCU XMIT DATA

SCU TO MIA XMIT DATA

SCU TO MIA SYNC

SCU TO MIA TIMING

SCU LOGIC VOLTAGE LOW LEVEL DETECTOR

SCU LOGIC

PWR LOSS

PS BITE

PS BITE VALID

BITE 1 (PS1)

BITE 2 (PS1)

BITE 1 (PS2)

BITE 2 (PS2)

CMD BITE 1 (PS1,PS2)

PWR BUS 1 REG

PWR BUS 2 REG

SENSE

ENABLE

INHIBIT

RESET

CLOCK

DATA

SYNC

CMD SYNC

WORD SYNC

SYNC TYPE (0=CMD/1=DATA)

SYNC COMPLETE

PARITY BIT

MANCHESTER CONVERTER

MANCHESTER DECODER

MANCHESTER ENCODER

MIA ERROR DETECT

MDM ADDRESS CHECK

RECEIVER SYNC LOGIC

RESPONSE SYNC LOGIC

PROGRAM-CONTROLLED TIMER LOGIC

CONTROL STORE ADDRESSING LOGIC

INSTRUCTION CONTROL DECODE

CONDITION SENSE MULTIPLEXER

REGISTER FILE

SEQUENCE PROM FORMAT

SEQUENCE PARITY CHECK LOGIC

POWER INTERRUPT MONITOR LOGIC

CYCLIC COMPARE LOGIC

SCU BIT TEST

PS BITE CNTL

PROM PWR RESET

SCU RESET

CHECK PATTERN (CPT)

END-OF-WORD

CMD SYNC

XMIT SHIFT CLOCK

RCVR ENABLE

XMIT ENABLE

XMIT DATA AVAILABLE

TRANSMIT ENABLE

DEAD STOP CLEAR (DSC)

RESET

SCU TO MIA DATA

MIA TO SCU DATA

SCU TO MIA CONTROL SIGNALS

MIA TO SCU CONTROL SIGNALS

SCU TO MIA RCVR ENABLE SIGNALS

MIA TO SCU RCVR ENABLE SIGNALS

SCU TO MIA XMIT CLOCK SIGNALS

MIA TO SCU XMIT CLOCK SIGNALS

SCU TO MIA XMIT DATA

MIA TO SCU

DATE: 07/13/95	NAME: BJB	VERSION: BPT: 6
DATE: 07/26/95	NAME: LAN	VERSION: BPT: 7
DATE: 05/10/96	NAME: CAR	VERSION: INH: 7

1. SRB MDM'S NO LONGER CROSS-STRAP REDUNDANT +18.6VDC POWER BUSES INFLIGHT. ISOLATION IS MAINTAINED VIA ELECTRONIC SWITCHES (REFER TO DWG 8.8 SHEET 3, ZONE V-5 FOR DETAILS). SRB MDM'S DO NOT UTILIZE CORE PWR SUPPLY +10VDC REGULATOR LOGIC (PS MASTER HYBRID)

2. THE FOLLOWING LOGIC REPRESENTATION SUMMARIZES THE HARDWARE AND SOFTWARE LOGIC BEHIND THE BITS IN THE BITE STATUS REGISTER, AND THE ACTION TAKEN

BITE STATUS REGISTER (BSR) HARDWARE/SOFTWARE LOGIC SUMMARY

BIT 1 POWER INTERRUPT (PWR INT) — ACTION: ALL ANALOG AND DISCRETE OUTPUT CHANNELS ARE ABOUT TO BE RESET TO ZERO VDC

BIT SET DURING PWR-UP OR PWR-DOWN (REFER TO ZONE M,N-3 FOR DETAILED LOGIC) EACH SCU WILL SIMULTANEOUSLY DETECT PWR INT AND SET ITS OWN BSR

BIT 2 INCOMING DATA ERROR (IDE) — ACTION: CMD WD/CMD DATA WD PROCESSING IS TERMINATED (SUBSEQUENT INCOMING DATA WORDS OF SAME MESSAGE ARE DISCARDED)

HARDWARE | SOFTWARE

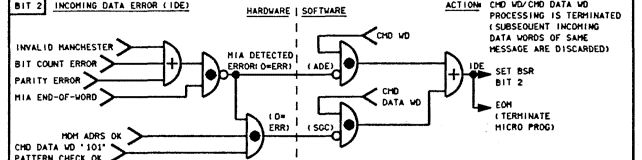

BIT 3 NON-EXISTANT IOM CHANNEL ADRS (NEC) — ACTION: SUBSEQUENT CMD DATA WORDS ARE ACCEPTED IF CORRECT, ANY INCORRECT RESPONSE DATA WORD IS FLAGGED TO THE GPC VIA CLEARED V-BIT

BIT SET WHEN IOM CHANNEL ADRS NOT VALID FOR SELECTED IOM ADRS (THAT IS, NO IOM REPLY AT "NEC" CHECK TIME)(REFER TO ZONE F-1 FOR DETAILS)

BIT 4 UNABLE TO TRANSFER DATA TO/FROM IOM, OR DATA TRANSFER INCOMPLETE (NTI) — ACTION: PROCESSING CONTINUES (V-BIT IS CLEARED FOR RESPONSE DATA WD THAT ENCOUNTED THE PROBLEM, SUBSEQUENT DATA WDS NOT AFFECTED)

BIT SET WHEN IOM REPLY (IRP) OR A/D REPLY (ADR) INDICATES FAILURE TO COMPLETE DATA TRANSFER (REFER TO ZONE F-1 FOR DETAILS)

BIT 5 TOO MANY WORDS IN LAST MESSAGE (TMW) — ACTION: CMD DATA WD PROCESSING IS TERMINATED (THAT IS, CMD DATA WD IS IGNORED)

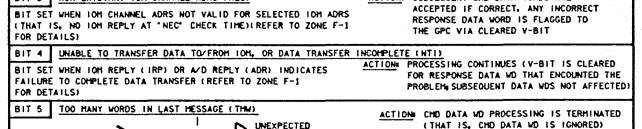

*IF CMD WD MESSAGE TERMINATED PREMATURELY DUE TO DETECTED ERROR, CTR UNDERFLOW SET TO BYPASS THIS CHECK
**BIT 5 SET DURING INITIAL PWR-UP SEQUENCE AND DURING SCU BITE TEST SEQUENCING

BIT 6 LAST CMD NOT COMPLETED (LCN) — ACTION: NEW CMD WORD IS ACCEPTED

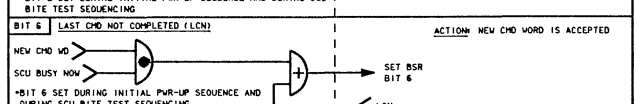

BIT 7 SIMULTANEOUS OPERATION OF BOTH SCU'S (SIMOP) — ACTION: CAUSES IMMEDIATE HALT OF PROCESSING FOR BOTH PRI AND SEC SCU'S. EITHER SCU WILL CONTINUE UPON RECEIPT OF A NEW CMD WORD

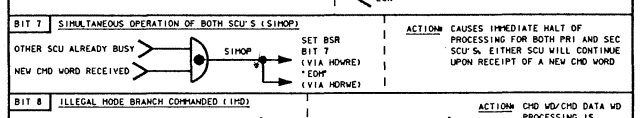

BIT 8 ILLEGAL MODE BRANCH COMMANDED (IMD) — ACTION: CMD WD/CMD DATA WD PROCESSING IS TERMINATED

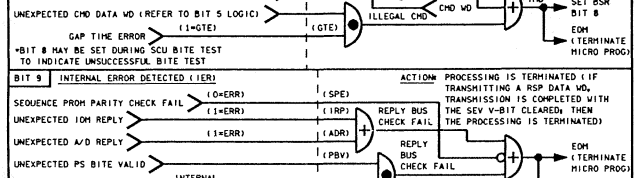

BIT 9 INTERNAL ERROR DETECTED (IER) — ACTION: PROCESSING IS TERMINATED (IF TRANSMITTING A RSP DATA WD, TRANSMISSION IS COMPLETED WITH THE SEV V-BIT CLEARED); THEN THE PROCESSING IS TERMINATED)

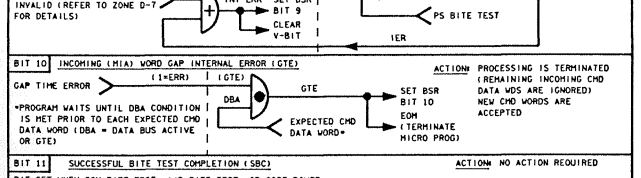

BIT 10 INCOMING (MIA) WORD GAP INTERNAL ERROR (GTE) — ACTION: PROCESSING IS TERMINATED (REMAINING INCOMING CMD DATA WDS ARE IGNORED) NEW CMD WORDS ARE ACCEPTED

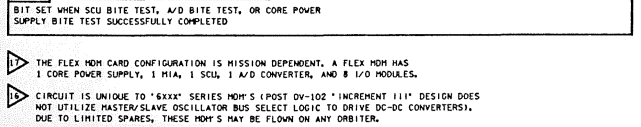

BIT 11 SUCCESSFUL BITE TEST COMPLETION (SBC) — ACTION: NO ACTION REQUIRED

BIT SET WHEN SCU BITE TEST, A/D BITE TEST, OR CORE POWER SUPPLY BITE TEST SUCCESSFULLY COMPLETED

1. THE FLEX MDM CARD CONFIGURATION IS MISSION DEPENDENT. A FLEX MDM HAS 1 CORE POWER SUPPLY, 1 MIA, 1 SCU, 1 A/D CONVERTER, AND 8 I/O MODULES.

2. CIRCUIT IS UNIQUE TO '6XXX' SERIES MDM'S (POST DV-102 'INCREMENT III' DESIGN) DOES NOT UTILIZE MASTER/SLAVE OSCILLATOR BUS SELECT LOGIC TO DRIVE DC-DC CONVERTERS). DUE TO LIMITED SPARES, THESE MDM'S MAY BE FLOWN ON ANY ORBITER.

3. CIRCUIT IS UNIQUE TO '5XXX' SERIES MDM'S (DV-102 DESIGN, DEVELOPMENT, TEST, AND EVALUATION UNITS). DUE TO LIMITED SPARES, THESE MDM'S MAY BE FLOWN ON ANY ORBITER.

4. MDM WIRED ADDRESS (DECIMAL):

FF 1 - FF 4, PF 1, LF 1 } 10 — FA 1 - FA 4, PA 1, LA 1 } 12 — FLX 1 • FLX 2 } 12 — LL 1 9, LL 2 6, LR 1 15, LR 2 18 — OF 1 12, OF 2 15, OF 3 17, OF 4 18 — OA 1 10, OA 2 6, OA 3 9

* MISSION DEPENDENT ADRS = 6, 9, 15, 29, OR 30
+ LM 1 IS USED FOR EDO MISSIONS

8 MDM 1

NATIONAL AERONAUTICS AND SPACE ADMINISTRATION LYNDON B. JOHNSON SPACE CENTER HOUSTON, TEXAS	SIGNATURE	DATE
MULTIPLEXER/ DEMULTIPLEXER	DSGN L. BUCHANAN	11-7-78
	DR L. BUCHANAN	11-7-78
	ENGR K. AKAGI	
	ENGR Roger Cloos	5/15/96
	APP	F1E96
DWG NO 8.8	SPACE SHUTTLE ALL	APP H.J. Clancy 5-15-96
SHEET 1 OF 3 PAGE 8.8-1	126.5 x 34	CADS S.K. Kimbrell 6-17-96
	LTR E	PCN 6

MDM COMMAND WORD AND RESPONSE DATA WORD FORMATS

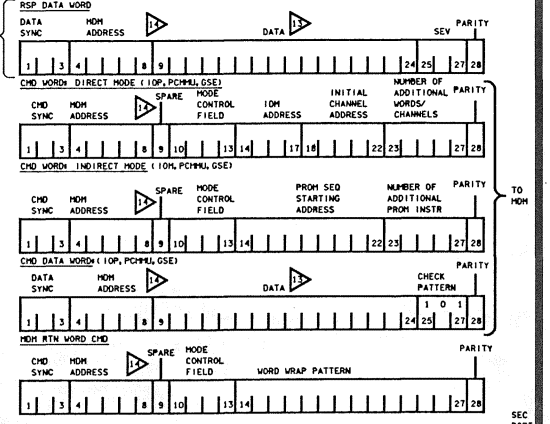

MDM OPERATION OVERVIEW

MIA RECEIVES CMD WD VIA DATA BUS, CONVERTS WORD FROM SERIAL MANCHESTER TO NRZ AND SENDS WORD SERIALLY TO THE SCU. SCU CONVERTS SERIAL NRZ TO PARALLEL DATA, 4 OR 5 BITS AT A TIME. THESE 4-BIT OR 5-BIT GROUPS ARE PROCESSED EVEN AS THE MIA RECEIVES THE REMAINDER OF THE WORD. THE FIRST 5 BITS (MDM ADDRESS) ARE COMPARED WITH MDM'S OWN WIRED ADRS. IF ADRS OK (AD SYNCH), PWR IS APPLIED TO THE CONTROL STORE MEMORY (MDM MICRO-PROCESSOR). THE SUBSEQUENT INCOMING DATA (4 OR 5 BITS AT A TIME) IS ROUTED THRU THE MDM UNDER PROGRAM CONTROL. THE INCOMING MODE CONTROL FIELD DIRECTS THE MICRO-PROCESSOR TO A SPECIFIC PROGRAM BRANCH. REFER TO THE "MDM PROGRAM INTERPRETATION HANDBOOK" (JSC-10579) FOR DETAILED PROGRAM LOGIC

1. DATA FIELD DEFINES THE DATA TO BE SENT TO OR RECEIVED FROM AN IOM

2. SIGNALS SCU THAT THE IOM HAS BEEN SELECTED, THAT THE SCU CONTROL WORD HAS VALID CHANNEL ADDRESS, VALID TASK AND PROPER CHECK BITS, AND THAT THE REQUESTED OPERATION HAS BEEN PERFORMED

3. SEQ PROM IS USED IN INDIRECT MODE FOR CMD DATA OR RESPONSE DATA XFERS, AND IS PROGRAMMED UNIQUELY FOR EACH MDM TYPE. EACH PROM CMD WORD CAN INITIATE XFER OF 1 TO 16 MDM RESPONSE WORDS. MAX PROM PROGRAM LENGTH IS 32 CMD WORDS. IOM CLASS FIELD IS DETERMINED FROM IOM ADDRESS FOR BOTH DIRECT AND INDIRECT MODE. THE IOM CLASS FIELD THEN OVERLAYS THE IOM ADDRESS IN THE REGISTER FILE

4. DURING INITIAL PWR-UP SEQUENCE (AFTER DSC), DELAYED DEAD STOP CLEAR HOLDS ADRS BIT REGISTER RESET UNTIL CONTROL STORE PROM IS ENABLED. THIS FORCES PROGRAM TO OCTAL ADRS 000 (INITIAL PWR UP), UNLESS PWR LOSS (DSC) OCCURS, SUBSEQUENT PROGRAM BRANCHES ARE CONTROLLED BY CONTENTS OF THE "SPECIAL" REG (PWR INT BIT, CMD SYNC BIT). FIRST INSTRUCTION WILL BE EXECUTED 5μ SEC AFTER MDM ADRS COMPARISON (ZONE N-5)

5. 5-BIT UPPER AND 4-BIT LOWER UP/DOWN COUNTERS ARE CONTROLLABLE VIA SCU MICRO INSTRUCTION. COUNTERS FUNCTION AS:
   1. COUNT DOWN NUMBER OF WORDS TO BE TRANSFERRED
   2. INCREMENT CHANNEL ADDRESS
   3. HOLD AND INCREMENT 9 BIT ADDRESS FOR PROM EXECUTION
   4. CONDITIONAL BRANCH REGISTER (COUNTER UNDER FLOW)

6. IOM REPLY (IRP) AND A/D REPLY (ADR) ARE NORMALLY LOGIC ZERO WITH SIGNALS SET ONLY AT SPECIFIED TIMES. MICRO PROGRAMS PERFORM A REPLY BUS CHECK PRIOR TO RECEIPT OF DATA TO VERIFY REPLY LINES NOT FAILED ON

7. SELECTS A/D MODE OF OPERATION: IOM DATA OR ONE OF FIVE BITE TEST MODES. A/D CONV BITE TEST RETURNS FIVE RSP DATA WORDS: +FS, -REF, MULL, +REF, +FS

8. MIA AND SCU ARE HELD IN RESET CONDITION UNTIL 90 PERCENT POWER LEVEL IS REACHED. AFTER RESET PERIOD, THE SCU CONDUCTS SCU POWER-UP BITE TESTS AND AFTER SUCCESSFUL COMPLETION ENABLES THE MIA

9. FORTY-SIX INPUTS EXCLUSIVE OR'ED TO PRODUCE AN 8-BIT TEST FIELD:
   1. ALL CONDITION SET DISCRETES EXCEPT "EOM"
   2. CONTROL STORE PROM BITS 17 THRU 37 EXCEPT BIT 35 (CYCLIC LOAD)
   3. RSP WD CHECK-BIT VERIFICATION DETECTED INTERNAL ERROR (ZONE D-7)

10. NONCOMPARISON RESULTS IN IMMEDIATE RESET OF BOTH MIA AND SCU. RESET CONDITION CAN ONLY BE REMOVED BY CYCLING POWER TO THE MDM. PORT HOSTING WILL ALSO RECOVER MDM

11. BOTH POWER SUPPLIES ARE CONTINUOUSLY IN OPERATION. POWER SUPPLY DESIGN DOES NOT ATTEMPT TO BALANCE THE POWER PROVIDED BY EACH BUS.

    DURING PS BITE TESTS, REGULATORS ARE "INHIBITED" (BY REDUCING REGULATION VALUE ABOUT 2-3%) IN ORDER TO FORCE OTHER CHANNEL TO CARRY FULL LOAD. IF OTHER PWR SUPPLY HAS FAILED, OUTPUT WILL DECREASE TO REGULATION LEVEL OF PWR SUPPLY BEING TESTED

12. CAPABLE OF MAINTAINING POWER FOR 2 MILLISECONDS IN EVENT OF LOSS OF PRIME POWER

13. DESCRIBES DPS MDM SWITCH, POWER SOURCE, AND TM POINT CORRELATION. PWR AND CNTLS FOR 01 MDM'S SHOWN ON DWG 17.1. FLEX MDM PWR AND CNTLS ARE MISSION DEPENDENT.

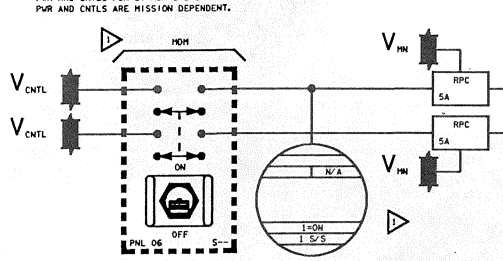

MDM	PNL 06 SWITCH NAME	PNL 06 SW NO	PNL 06 NO	MDM POWER SUPPLY 1 POWER SOURCE V CNTL	MDM POWER SUPPLY 1 POWER SOURCE V MN PCA	MDM POWER SUPPLY 2 POWER SOURCE V CNTL	MDM POWER SUPPLY 2 POWER SOURCE V MN PCA	MML NO	TLM SOURCE	MML NAME
FF 1	FF 1	S26	06	AB2	MNA FPC1	AB3	MNB FPC2	V72S7981E	OF 1	MDM FF 1 PWR SUPPLY NO 1-RPC
FF 2	FF 2	S27	06	BC2	MNB FPC2	BC3	MNC FPC3	V72S7983E	OF 2	MDM FF 2 PWR SUPPLY NO 1-RPC
FF 3	FF 3	S28	06	CA3	MNC FPC3	CA2	MNA FPC1	V72S7985E	OF 3	MDM FF 3 PWR SUPPLY NO 1-RPC
FF 4	FF 4	S29	06	BC1	MNB FPC2	BC3	MNC FPC3	V72S7987E	OF 4	MDM FF 4 PWR SUPPLY NO 1-RPC
FA 1	FA 1	S21	06	AB1	MNA APC4	AB2	MNB APC5	V72S7991E	OA 1	MDM FA 1 PWR SUPPLY NO 1-RPC
FA 2	FA 2	S22	06	BC1	MNB APC5	BC2	MNC APC6	V72S7993E	OA 2	MDM FA 2 PWR SUPPLY NO 1-RPC
FA 3	FA 3	S23	06	CA2	MNC APC6	CA1	MNA APC4	V72S7995E	OA 3	MDM FA 3 PWR SUPPLY NO 1-RPC
FA 4	FA 4	S24	06	CA3	MNC APC6	CA1	MNA APC4	V72S7997E	OA 3	MDM FA 4 PWR SUPPLY NO 1-RPC
PF 1	PL 1	S52	06	AB1	MNA FPC1	AB3	MNB FPC2	V72S7972E	OF 2	PL MDM PF 1 PWR SUPPLY NO 2-RPC
PF 2	PL 2	S20	06	BC1	MNB FPC2	BC3	MNC FPC3	V72S7973E	OF 2	PL MDM PF 2 PWR SUPPLY NO 1-RPC
LF 1				GSE	PREFLT 1	GSE	PREFLT 2			
LA 1				GSE	PREFLT 1	GSE	PREFLT 2			
LL 1				MEC 1	MNA APC1	MEC 2	MNB APC2			
LL 2				MEC 1	MNA APC1	MEC 2	MNB APC2			
LR 1				MEC 1	MNA APC1	MEC 2	MNB APC2			
LR 2				MEC 1	MNA APC1	MEC 2	MNB APC2			

POWER AND CONTROLS FOR 01 MDM'S ARE SHOWN ON DWG 17.1-1

BASIC REV E-6

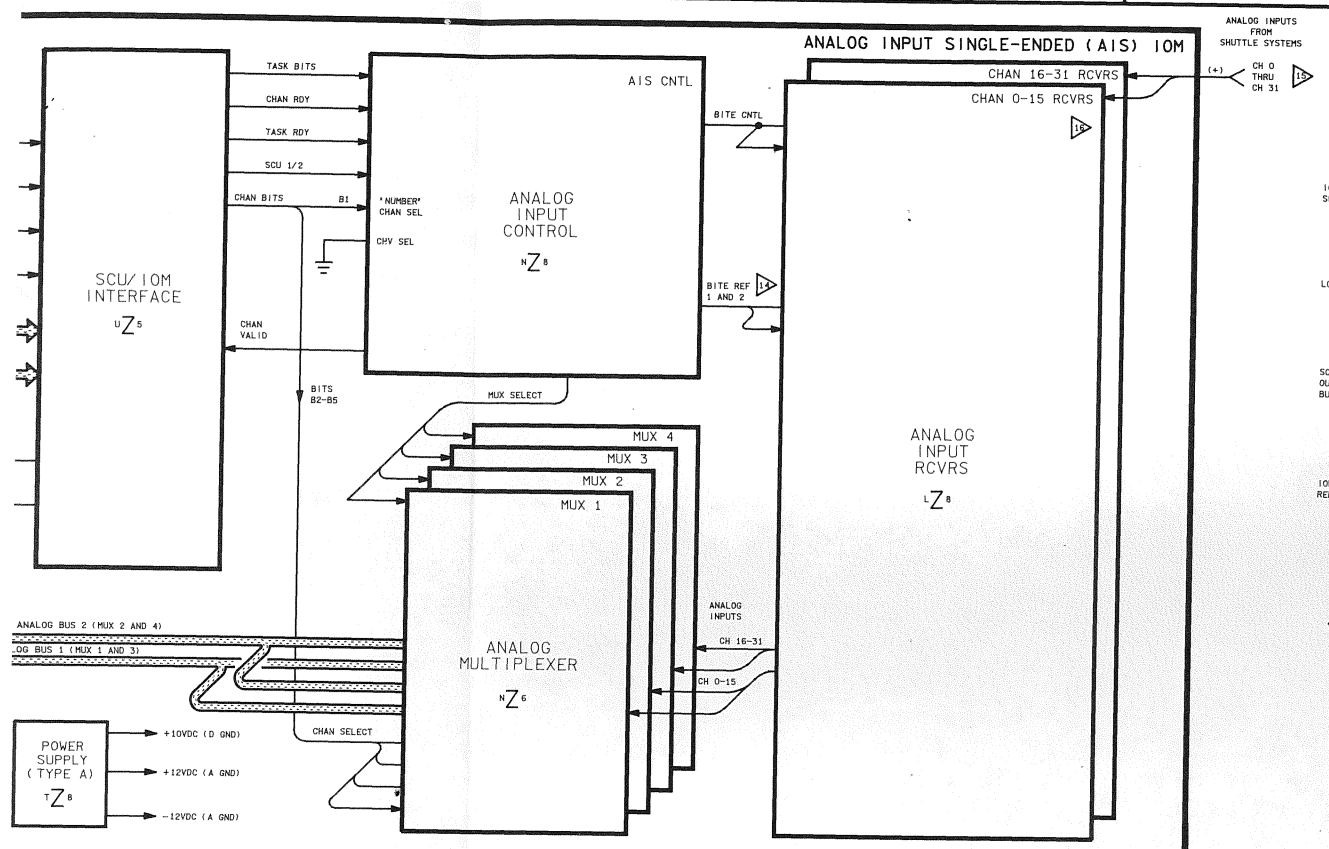

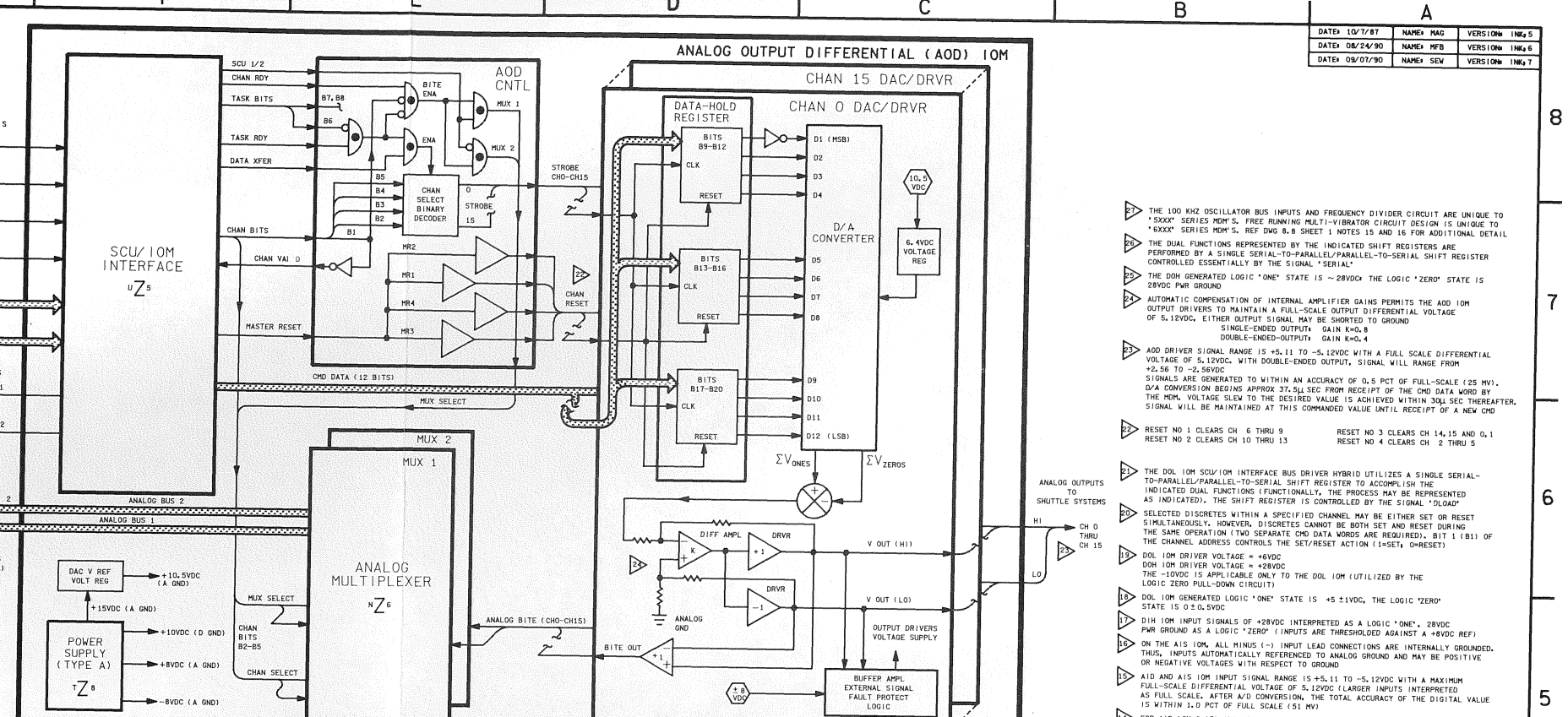

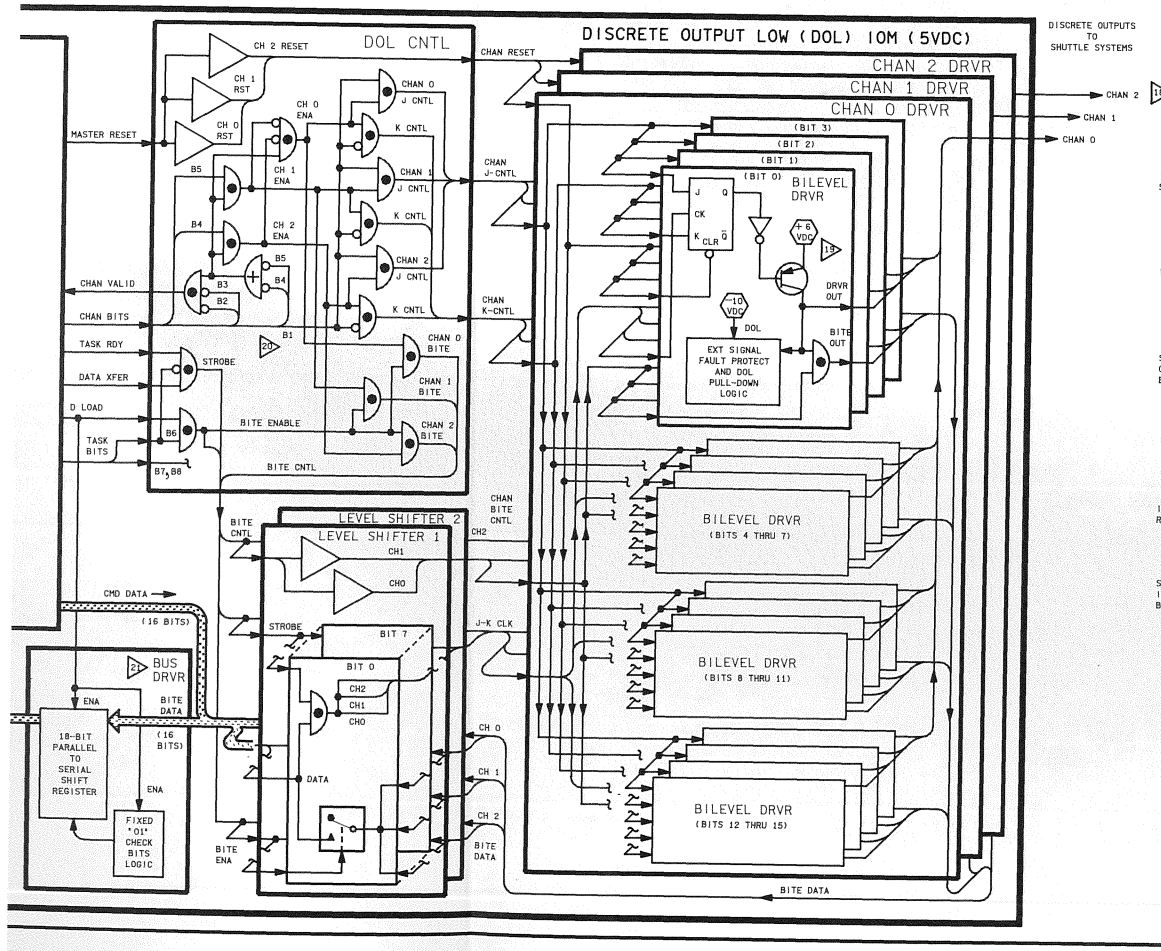

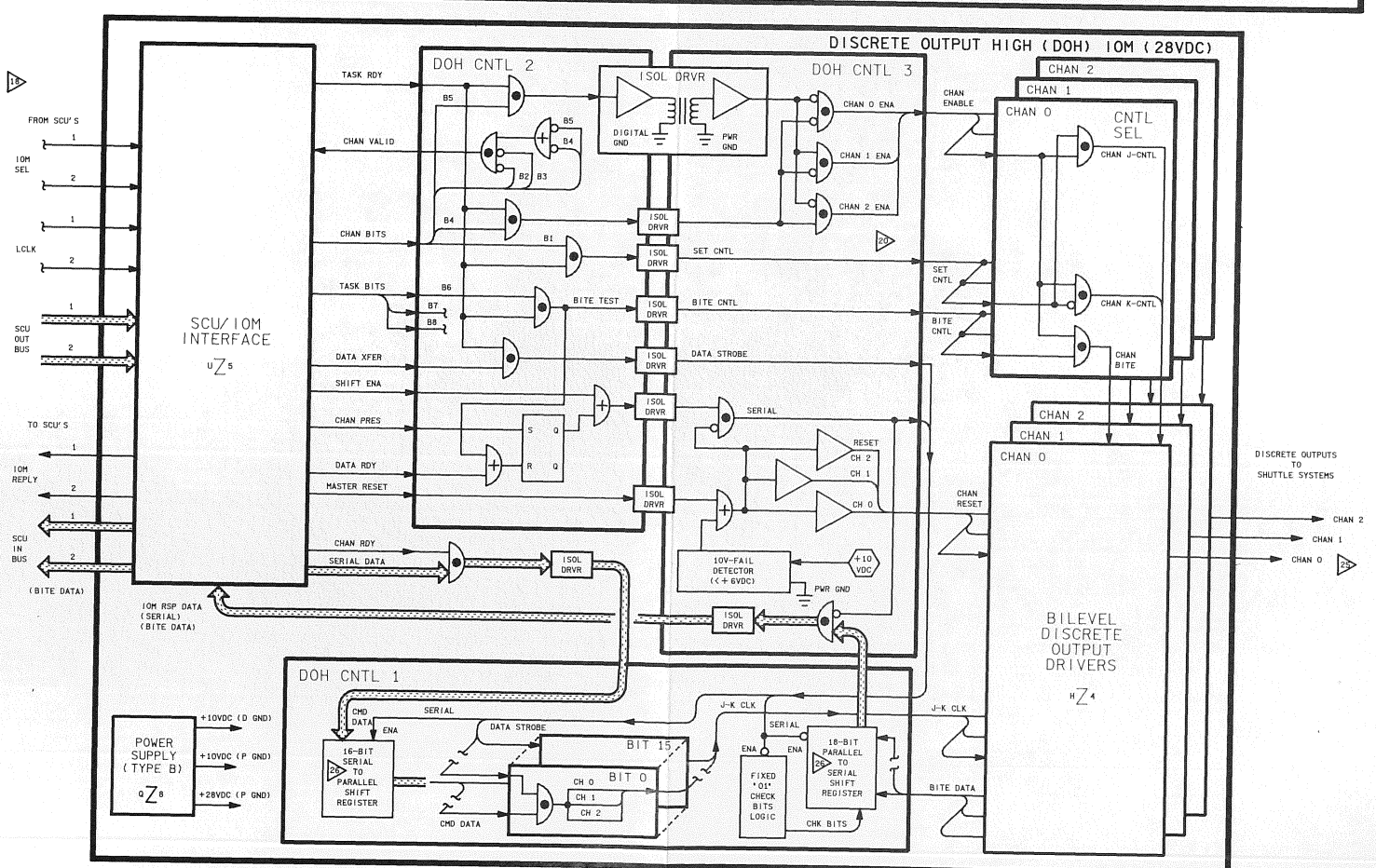

DATE= 10/7/87	NAME= MAG	VERSION= IN&S 5
DATE= 08/24/90	NAME= MFB	VERSION= IN&S 6
DATE= 09/07/90	NAME= SEV	VERSION= IN&S 7

(1) THE 100 KHZ OSCILLATOR BUS INPUTS AND FREQUENCY DIVIDER CIRCUIT ARE UNIQUE TO '5XXX' SERIES MDM'S. FREE RUNNING MULTI-VIBRATOR CIRCUIT DESIGN IS UNIQUE TO '6XXX' SERIES MDM'S. REF DWG 8.8 SHEET 1 NOTES 15 AND 16 FOR ADDITIONAL DETAIL

(2) THE DUAL FUNCTIONS REPRESENTED BY THE INDICATED SHIFT REGISTERS ARE PERFORMED BY A SINGLE SERIAL-TO-PARALLEL/PARALLEL-TO-SERIAL SHIFT REGISTER CONTROLLED ESSENTIALLY BY THE SIGNAL 'SERIAL'

(3) THE DOH GENERATED LOGIC 'ONE' STATE IS ~28VDC± THE LOGIC 'ZERO' STATE IS 28VDC± PWR GROUND

(4) AUTOMATIC COMPENSATION OF INTERNAL AMPLIFIER GAINS PERMITS THE AOD IOM OUTPUT DRIVERS TO MAINTAIN A FULL-SCALE OUTPUT DIFFERENTIAL VOLTAGE OF 5.12VDC, EITHER OUTPUT SIGNAL MAY BE SHORTED TO GROUND
SINGLE-ENDED OUTPUT= GAIN K=0.8
DOUBLE-ENDED-OUTPUT= GAIN K=0.4

(5) AOD DRIVER SIGNAL RANGE IS +5.11 TO -5.12VDC WITH A FULL SCALE DIFFERENTIAL VOLTAGE OF 5.12VDC. WITH DOUBLE-ENDED OUTPUT, SIGNAL WILL RANGE FROM +2.56 TO -2.56VDC
SIGNALS ARE GENERATED TO WITHIN AN ACCURACY OF 0.5 PCT OF FULL-SCALE (25 MV). D/A CONVERSION BEGINS APPROX 37.5μ SEC FROM RECEIPT OF THE CMD DATA WORD BY THE MDM. VOLTAGE SLEW TO THE DESIRED VALUE IS ACHIEVED WITHIN 30μ SEC THEREAFTER. SIGNAL WILL BE MAINTAINED AT THIS COMMANDED VALUE UNTIL RECEIPT OF A NEW CMD

(6) RESET NO 1 CLEARS CH 6 THRU 9 — RESET NO 3 CLEARS CH 14, 15 AND 0, 1
RESET NO 2 CLEARS CH 10 THRU 13 — RESET NO 4 CLEARS CH 2 THRU 5

(7) THE DOL IOM SCU/IOM INTERFACE BUS DRIVER HYBRID UTILIZES A SINGLE SERIAL-TO-PARALLEL/PARALLEL-TO-SERIAL SHIFT REGISTER TO ACCOMPLISH THE INDICATED DUAL FUNCTIONS (FUNCTIONALLY, THE PROCESS MAY BE REPRESENTED AS INDICATED). THE SHIFT REGISTER IS CONTROLLED BY THE SIGNAL 'DLOAD'

(8) SELECTED DISCRETES WITHIN A SPECIFIED CHANNEL MAY BE EITHER SET OR RESET SIMULTANEOUSLY. HOWEVER, DISCRETES CANNOT BE BOTH SET AND RESET DURING THE SAME OPERATION (TWO SEPARATE CMD DATA WORDS ARE REQUIRED). BIT 1 (B1) OF THE CHANNEL ADDRESS CONTROLS THE SET/RESET ACTION (1=SET, 0=RESET)

(9) DOL IOM DRIVER VOLTAGE = +6VDC
DOH IOM DRIVER VOLTAGE = +28VDC
THE -10VDC IS APPLICABLE ONLY TO THE DOL IOM (UTILIZED BY THE LOGIC ZERO PULL-DOWN CIRCUIT)

(10) DOL IOM GENERATED LOGIC 'ONE' STATE IS +5 ±1VDC, THE LOGIC 'ZERO' STATE IS 0 ±0.5VDC

(11) DIH IOM INPUT SIGNALS OF +28VDC INTERPRETED AS A LOGIC 'ONE', 28VDC PWR GROUND AS A LOGIC 'ZERO' (INPUTS ARE THRESHOLDED AGAINST A +2.25VDC REF)

(12) ON THE AIS IOM, ALL MINUS (-) INPUT LEAD CONNECTIONS ARE INTERNALLY GROUNDED. THUS, INPUTS AUTOMATICALLY REFERENCED TO ANALOG GROUND AND MAY BE POSITIVE OR NEGATIVE VOLTAGES WITH RESPECT TO GROUND

(13) AID AND AIS IOM INPUT SIGNAL RANGE IS +5.11 TO -5.12VDC WITH A MAXIMUM FULL-SCALE DIFFERENTIAL VOLTAGE OF 5.12VDC (LARGER INPUTS INTERPRETED AS FULL SCALE). AFTER A/D CONVERSION, THE TOTAL ACCURACY OF THE DIGITAL VALUE IS WITHIN 1.0 PCT OF FULL SCALE (51 MV)

(14) FOR AID (CH 0-15) AND AIS (CH 0-31) IOM BITE TEST, TWO SEPARATE A/D CONVERTED RESPONSE DATA WORDS ARE SENT TO THE GPC
RSP WORD 1 = ANALOG BITE VALUE = 1/2(INPUT SIG1+ (BITE REF)
RSP WORD 2 = NON-BITE VALUE = INPUT SIGNAL
IOM BITE REFERENCE VOLTAGES
('+' = +2.0 VDC = BITE REF 1)
('-' = -2.0 VDC = BITE REF 2)

CH 0 +	CH 4 −	CH 8 −	CH 12 +	CH 16 −	CH 20 +	CH 24 +	CH 28 −
CH 1 −	CH 5 +	CH 9 +	CH 13 −	CH 17 +	CH 21 −	CH 25 −	CH 29 +
CH 2 −	CH 6 +	CH 10 +	CH 14 −	CH 18 +	CH 22 −	CH 26 −	CH 30 +
CH 3 +	CH 7 −	CH 11 −	CH 15 +	CH 19 −	CH 23 +	CH 27 +	CH 31 −

(15) DIL IOM INPUT SIGNALS OF +5VDC INTERPRETED AS A LOGIC 'ONE', 0VDC AS A LOGIC 'ZERO'. (INPUTS ARE THRESHOLDED AGAINST A +2.25VDC REF)

(16) CHAN BITS (CHANNEL ADDRESS) LATCHED VIA 'CHAN RDY' TIMING SIGNAL AFTER FIFTH SERIAL DATA BIT CLOCKED TO OUTPUT OF SHIFT REGISTER, TASK BITS (IOM TASK) SIMILARLY LATCHED VIA 'TASL RDY' SIGNAL AFTER EIGHTH SERIAL DATA BIT

(17) SIGNAL 'INPUT' CONNECTION (BUS CNTL HYBRID) IS A FUNCTION OF THE IOM TYPE=
DOL,DOH,AOD,SIO,TAC — SIGNAL 'TASK RDY'
DIL,DIH,AID,AIS — SIGNAL GROUND (LOGIC ZERO)
(THIS FORCES SIGNAL 'I/O CNTL' ALWAYS TO LOGIC 'ONE' STATE)
SIGNAL 'SER IOM' CONNECTION (BUS CNTL HYBRID) IS A FUNCTION OF THE IOM TYPE=
SIO,TAC — +10VDC (LOGIC ONE)
ALL OTHERS — SIGNAL GROUND (LOGIC ZERO)
(THIS DISABLES LOGIC GATE)

(18) THE SRB MDM DOL IOM (DWG 8.8, SHT 3) DOES NOT ROUTE THE SIGNAL 'RESET' TO THE BUS RCVR MODULES AND THUS, CANNOT RESPOND TO IOM RESET CMDS FROM THE SCU

(19) PARALLEL DATA LINES ROUTE 'CMD DATA' (BITS B9-B24) TO THE FOLLOWING IOM TYPES ONLY=
AOD (12 BITS) — DOL (16 BITS) — SIO (16 BITS)

(20) IF BOTH 'IOM SEL' 1&2 ARE ENABLED, ALL I/O CARD CMDS WILL BE 'LOCKED OUT' UNTIL THE FAILED 'IOM SEL' DISCRETE IS RESET (PROBABLY VIA MDM PWR CYCLE)

(21) SIGNAL 'I/O CNTL' CONTROLS INITIALIZATION OF TIMER NO 2 WHICH, IN TURN, CONTROLS ALL SUBSEQUENT IOM TIMING AND CONTROL SIGNALS FOR PRESENT SCU CMD

(22) IOM SIGNAL 'CLK' IS USED EXTENSIVELY (BUT NOT SHOWN) IN EVERY MODULE TO CLOCK D-TYPE AND J-K TYPE FLIP FLOPS, SHIFT REGISTERS, AND COUNTERS

(23) THE 28VDC (USED ONLY BY DOH (IOM'S) DOES NOT HAVE ENERGY STORAGE ASSOCIATED WITH IT, AND THEREFORE, WILL NOT TOLERATE A 2-MILLI SEC DROPOUT

(24) DURING PS BITE TESTS, REGULATORS ARE 'INHIBITED' (BY REDUCING REGULATION VALUE ABOUT 2-3 PCT) IN ORDER TO FORCE OTHER REGULATOR TO CARRY FULL LOAD. IF OTHER REG HAS FAILED, OUTPUT WILL DECREASE TO REGULATION LEVEL OF PWR SUPPLY BEING TESTED

(25) POWER SUPPLIES 'TYPE A' AND DOH IOM 'TYPE B' UTILIZE CURRENT OVERLOAD PROTECTION LOGIC TO PROVIDE FAULT ISOLATION (CORE PWR SUPPLY PROTECTION). IF OVERLOAD TRIP CURRENT VALUE (TYPICALLY, APPROXIMATELY TEN TIMES MAX BITE VALUE) IS EXCEEDED, TRIP LOGIC CAN BE RESET ONLY BY CYCLING THE MDM POWER SWITCH (PNL 06)

(26) FOR DIL AND DIH IOM BITE TEST, INPUT DISCRETES ARE BYPASSED. INSTEAD, SPECIFIC BITS ARE SET/RESET VIA SELECTION OF BITE TEST 1 OR 2=

BITS	BITE TEST 1 CH 0	BITE TEST 1 CH 1	BITE TEST 1 CH 2	BITE TEST 2 CH 0	BITE TEST 2 CH 1	BITE TEST 2 CH 2
0- 3	RESET	RESET	SET	SET	SET	RESET
4- 7	SET	SET	RESET	RESET	RESET	SET
8-11	SET	RESET	SET	RESET	SET	RESET
12-15	RESET	SET	RESET	SET	RESET	SET

NOTES= (1) AOD IOM UTILIZES ONLY FIRST 12 BITS (NOMINALLY, ONLY FIRST TEN BITS CONTAIN DATA)

8 MDM 2

SIGNATURE		DATE
DSGN		
DR		
ENGR JAMES MILL		8/24/90
ENGR		9/20/90
APP		9/28/90
APP		
OMNIPLAN		9/7/90

NATIONAL AERONAUTICS AND SPACE ADMINISTRATION
LYNDON B. JOHNSON SPACE CENTER HOUSTON, TEXAS

MULTIPLEXER/ DEMULTIPLEXER

SPACE SHUTTLE | DWG NO 8.8
ALL
LTR E | FCN | 126.5 X 34 | PAGE | SHEET 2 OF 3

BASIC REV E

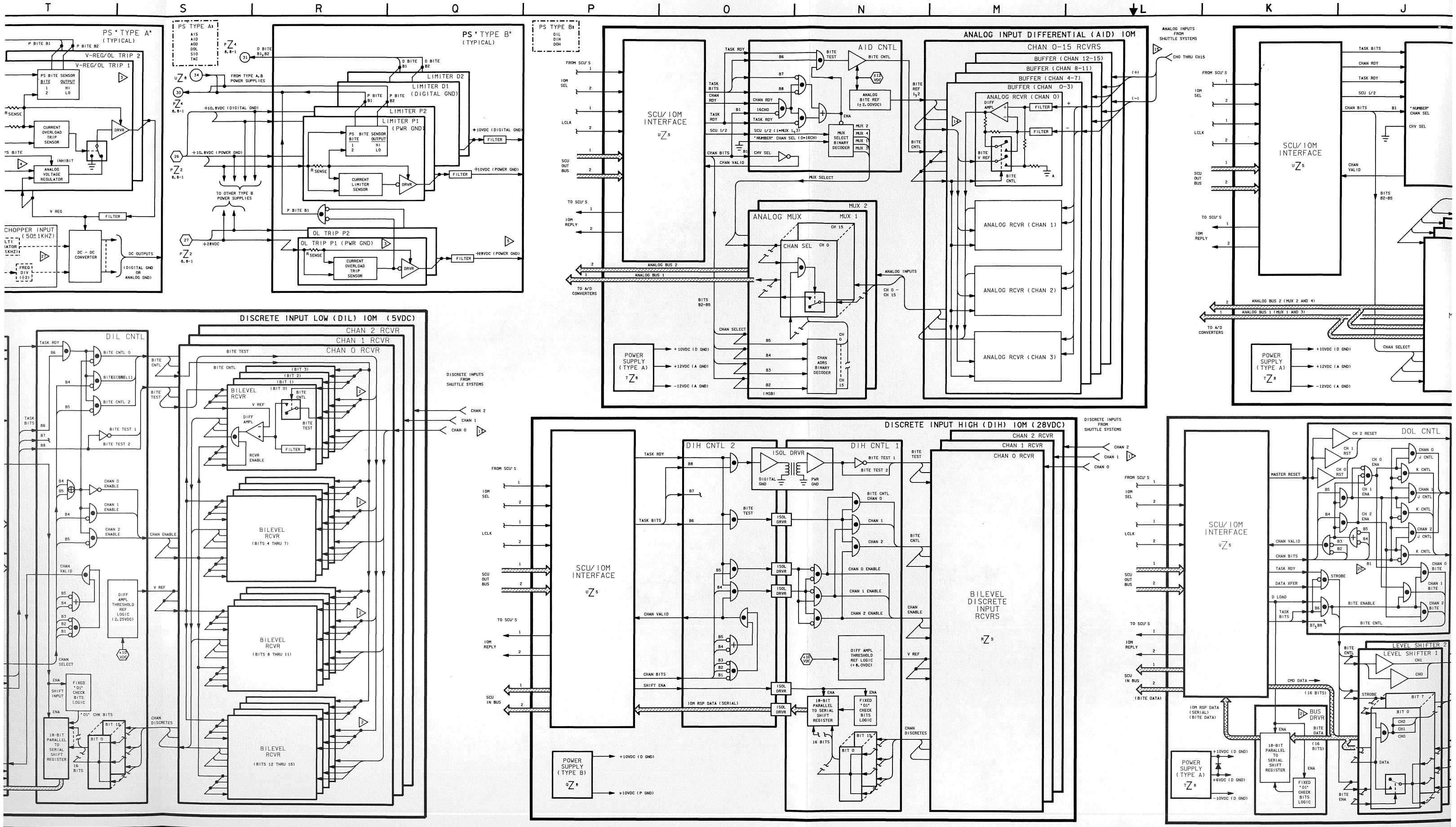

T
S
R
Q
P
O
N
M
L
K
J
PS "TYPE A" (TYPICAL)
V-REG/OL TRIP 2
V-REG/OL TRIP 1
CURRENT OVERLOAD TRIP SENSOR
ANALOG VOLTAGE REGULATOR
CHOPPER INPUT (50±1KHZ)
DC - DC CONVERTER
DC OUTPUTS
PS TYPE A:
PS "TYPE B" (TYPICAL)
LIMITER D2
LIMITER D1 (DIGITAL GND)
LIMITER P2
LIMITER P1 (PWR GND)
CURRENT LIMITER SENSOR
OL TRIP P2
OL TRIP P1 (PWR GND)
CURRENT OVERLOAD TRIP SENSOR
TO OTHER TYPE B POWER SUPPLIES
PS TYPE B:
ANALOG INPUT DIFFERENTIAL (AID) IOM
CHAN 0-15 RCVRS
BUFFER (CHAN 12-15)
BUFFER (CHAN 8-11)
BUFFER (CHAN 4-7)
BUFFER (CHAN 0-3)
ANALOG RCVR (CHAN 0)
ANALOG RCVR (CHAN 1)
ANALOG RCVR (CHAN 2)
ANALOG RCVR (CHAN 3)
AID CNTL
ANALOG BITE REF (±2.00VDC)
MUX SELECT BINARY DECODER
SCU/IOM INTERFACE
ANALOG MUX
MUX 2
MUX 1
CHAN SEL
CHAN ADRS BINARY DECODER
POWER SUPPLY (TYPE A)
ANALOG INPUTS FROM SHUTTLE SYSTEMS
DISCRETE INPUT LOW (DIL) IOM (5VDC)
DIL CNTL
CHAN 2 RCVR
CHAN 1 RCVR
CHAN 0 RCVR
BILEVEL RCVR
BILEVEL RCVR (BITS 4 THRU 7)
BILEVEL RCVR (BITS 8 THRU 11)
BILEVEL RCVR (BITS 12 THRU 15)
DIFF AMPL THRESHOLD REF LOGIC (2.25VDC)
FIXED "01" CHECK BITS LOGIC
18-BIT PARALLEL TO SERIAL SHIFT REGISTER
DISCRETE INPUTS FROM SHUTTLE SYSTEMS
DISCRETE INPUT HIGH (DIH) IOM (28VDC)
DIH CNTL 2
DIH CNTL 1
ISOL DRVR
BILEVEL DISCRETE INPUT RCVRS
DIFF AMPL THRESHOLD REF LOGIC (+8.0VDC)
POWER SUPPLY (TYPE B)
DOL CNTL
LEVEL SHIFTER 2
LEVEL SHIFTER 1
BUS DRVR

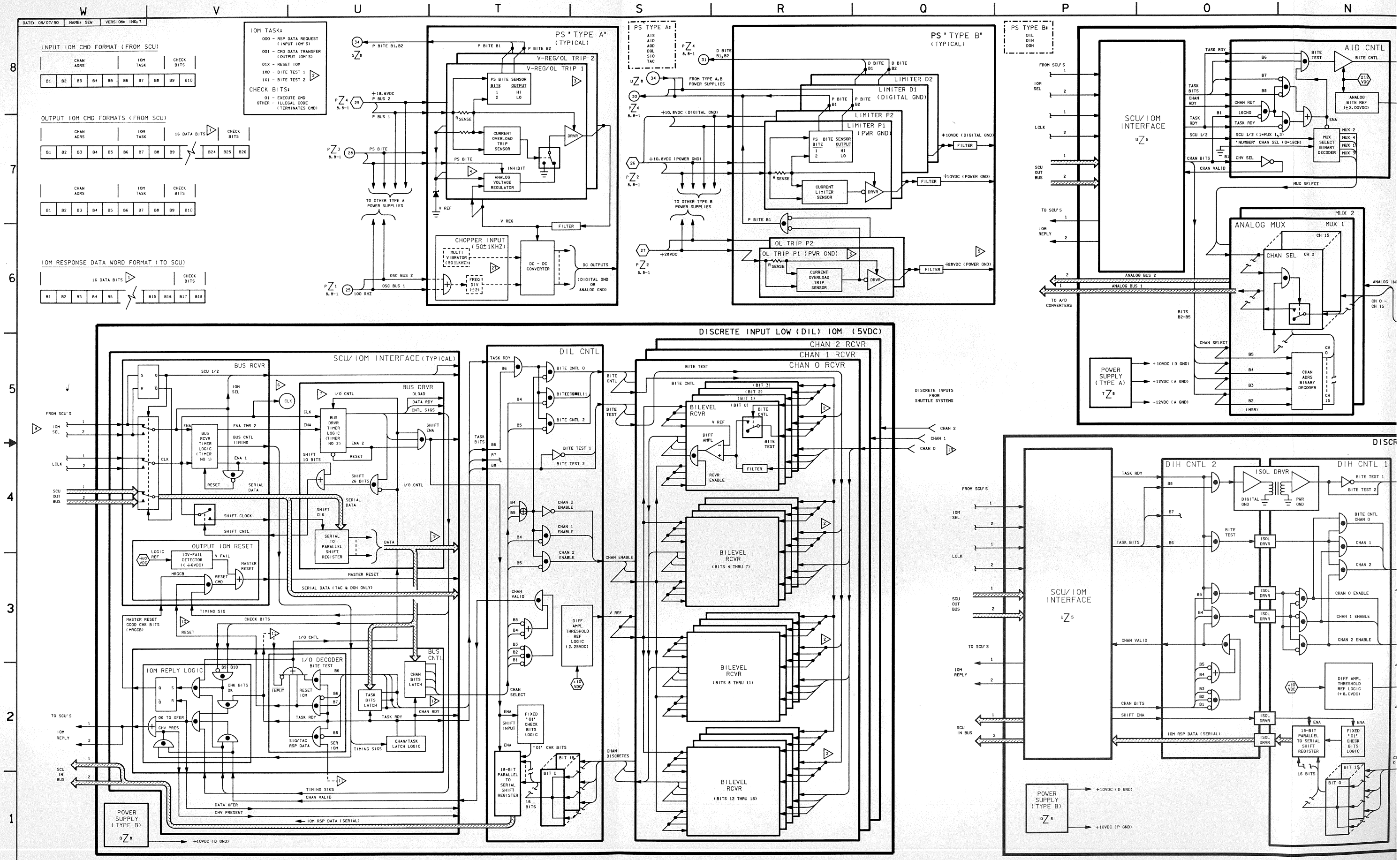

INPUT IOM CMD FORMAT (FROM SCU)
OUTPUT IOM CMD FORMATS (FROM SCU)
IOM RESPONSE DATA WORD FORMAT (TO SCU)
IOM TASK:
CHECK BITS:
PS TYPE A (TYPICAL)
PS TYPE B (TYPICAL)
PS TYPE A:
PS TYPE B:
V-REG/OL TRIP 2
V-REG/OL TRIP 1
CHOPPER INPUT (50±1KHZ)
DC - DC CONVERTER
LIMITER D2
LIMITER D1 (DIGITAL GND)
LIMITER P2
LIMITER P1 (PWR GND)
OL TRIP P2
OL TRIP P1 (PWR GND)
SCU/IOM INTERFACE
AID CNTL
ANALOG MUX
MUX 2
MUX 1
CHAN SEL
POWER SUPPLY (TYPE A)
DISCRETE INPUT LOW (DIL) IOM (5VDC)
SCU/IOM INTERFACE (TYPICAL)
BUS RCVR
BUS DRVR
DIL CNTL
CHAN 2 RCVR
CHAN 1 RCVR
CHAN 0 RCVR
BILEVEL RCVR
BILEVEL RCVR (BITS 4 THRU 7)
BILEVEL RCVR (BITS 8 THRU 11)
BILEVEL RCVR (BITS 12 THRU 15)
OUTPUT IOM RESET
IOM REPLY LOGIC
I/O DECODER
POWER SUPPLY (TYPE B)
DIH CNTL 2
DIH CNTL 1
ISOL DRVR
SCU/IOM INTERFACE
POWER SUPPLY (TYPE B)

BASIC REV E

DATE: 10/29/87	NAME: MPM	VERSION: INK 2
DATE: 08/23/90	NAME: JMB	VERSION: BPT 9
DATE: 08/29/90	NAME: VSH	VERSION: INK 3

SRB ANALOG INPUT DIFFERENTIAL (AID) IOM

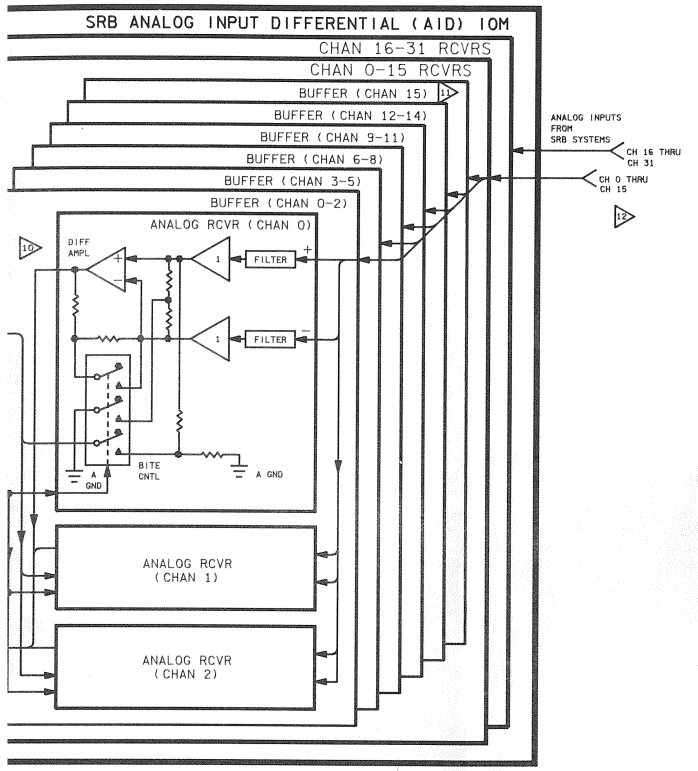

SERIAL INPUT/OUTPUT (SIO) IOM (DIGITAL)

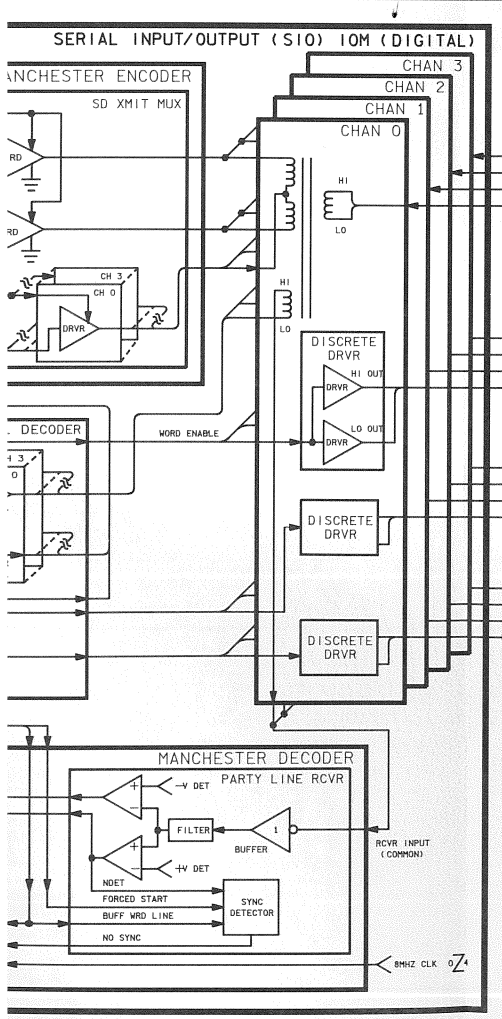

TACAN/RADAR ALTIMETER IOM (TAC)

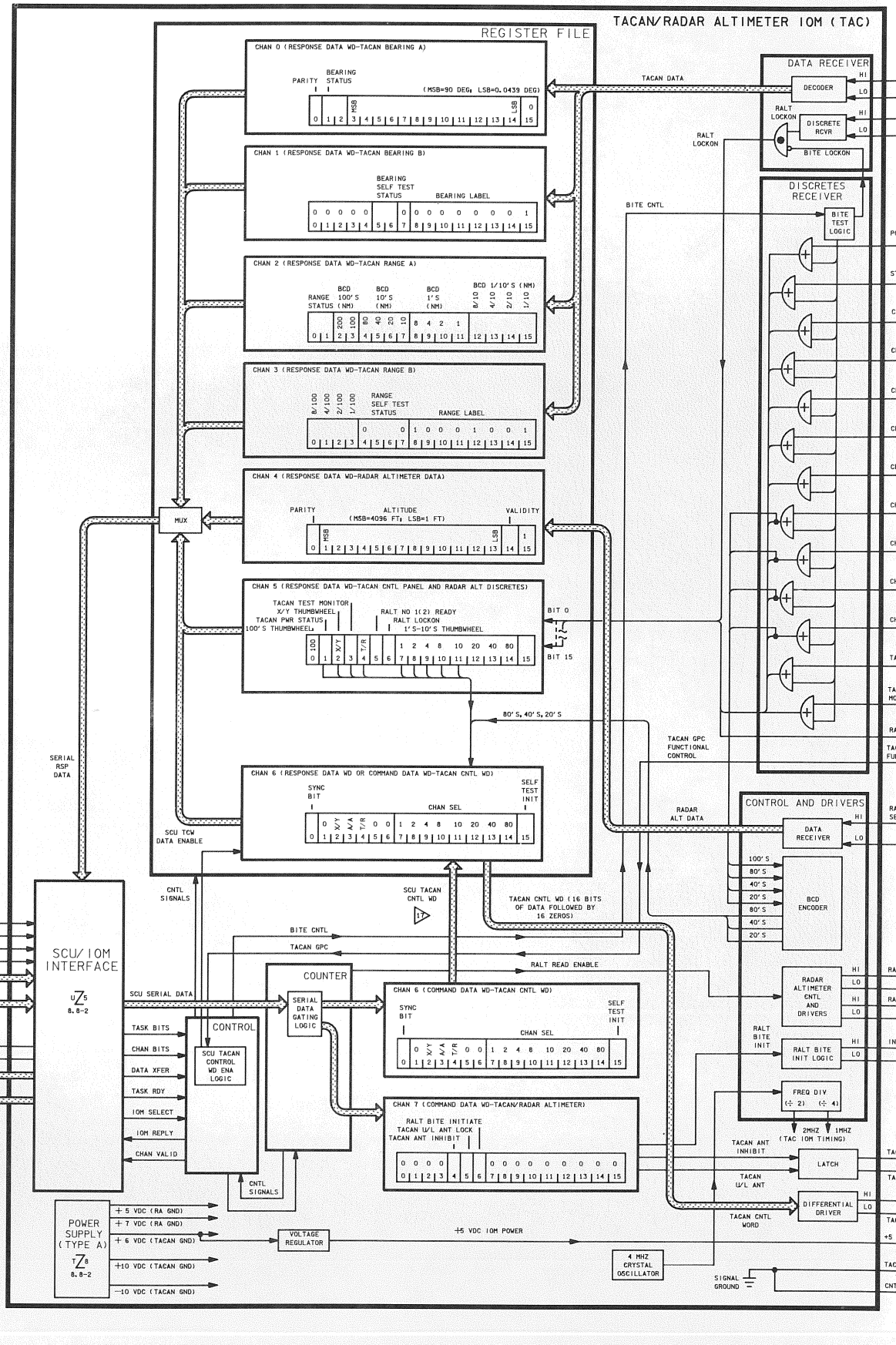

(14) SIO IOM BITE IS PREVENTED FROM BEING DETECTED BY THE SHUTTLE SUBSYSTEMS SINCE THE CONTROL DISCRETES 'WORD', 'MESSAGE IN', AND 'MESSAGE OUT' ARE NOT ENABLED DURING SIO BITE TEST

(13) SIO IOM BITE TEST PATTERN CONSISTS OF ALTERNATING ONE'S AND ZERO'S

BITE TEST	16-BIT RSP DATA FIELD
NO. 1	0 1 0 1 0 1 0 1 0 1 0 1 0 1 0 1
NO. 2	1 0 1 0 1 0 1 0 1 0 1 0 1 0 1 0

(12) SRB AID IOM INPUT SIGNAL RANGE IS +5.11 TO −5.12 VDC WITH A MAXIMUM FULL-SCALE DIFFERENTIAL VOLTAGE OF 5.12 VDC (LARGER INPUTS INTERPRETED AS FULL SCALE)

AFTER A/D CONVERSION, THE TOTAL ACCURACY OF THE DIGITAL VALUE IS WITHIN 0.5 PCT OF FULL SCALE (25 MV)

NOTE THAT SRB AID IOM ACCEPTS UP TO 32 DIFFERENTIAL INPUT CHANNELS RATHER THAN 16 AS IN THE CASE OF THE ORBITER AID IOM

(11) SRB AID IOM'S CONSIST OF THREE ANALOG RECEIVERS PER BUFFER, THE CHAN 15 AND CHAN 31 ANALOG RECEIVERS ARE PHYSICALLY LOCATED ON THE SAME BUFFER MODULE

(10) FOR SRB AID IOM BITE TEST, TWO SEPARATE A/D CONVERTED RESPONSE DATA WORDS ARE SENT TO THE GPC:
RSP WORD 1 = ANALOG BITE VALUE = 1/2 (INPUT SIG) + (BITE REF)
RSP WORD 2 = NON-BITE VALUE = INPUT SIGNAL
SRB AID IOM BITE REFERENCE VOLTAGE:
('1' = + 2.0 VDC = BITE REF 1)
('0' = − 2.0 VDC = BITE REF 2)

CH 0 + CH 1 −	CH 4 − CH 5 +	CH 8 − CH 9 +	CH 12 + CH 13 −
CH 16 − CH 17 +	CH 20 + CH 21 −	CH 24 + CH 25 −	CH 28 − CH 29 +
CH 2 − CH 3 +	CH 6 + CH 7 −	CH 10 + CH 11 −	CH 14 − CH 15 +
CH 18 + CH 19 −	CH 22 − CH 23 +	CH 26 − CH 27 +	CH 30 + CH 31 −

(9) SRB AID IOM 'AID CNTL' FUNCTIONALLY IDENTICAL TO SRB/TEB 'AIS CNTL' EXCEPT THAT REFERENCE VOLTAGE TO BITE TEST DRIVE LOGIC IS ±5.5 VDC RATHER THAN ±12 VDC

(8) DIH IOM INPUT SIGNALS OF +28 VDC INTERPRETED AS A LOGIC 'ONE'; +28 VDC PWR GROUND AS A LOGIC 'ZERO' (INPUTS ARE THRESHOLDED AGAINST A +8 VDC REF)

(7) DOL IOM GENERATED LOGIC 'ONE' STATE IS +5 ±1 VDC, THE LOGIC 'ZERO' STATE IS 0 ±0.5 VDC

(6) SELECTED DISCRETES WITHIN A SPECIFIED CHANNEL MAY BE EITHER SET OR RESET SIMULTANEOUSLY, HOWEVER, DISCRETES CANNOT BE BOTH SET AND RESET DURING THE SAME OPERATION (TWO SEPARATE CMD DATA WORDS ARE REQUIRED, BIT 1 (BI) OF THE CHANNEL ADDRESS CONTROLS THE SET/RESET ACTION (1=SET, 0=RESET)

(5) THE SRB DOL IOM POSSESSES UNIQUE LOGIC TO PROTECT AGAINST (OR LOCK OUT) CMDS TO THE IOM IN THE EVENT OF GPC OR MDM FAILURES AFTER LAUNCH (SPECIFICALLY PROTECTED ARE APU POWER ON/OFF DISCRETES AND RATE GYRO ON/OFF DISCRETES), NOMINALLY, AT ~T-37 SEC (LL1 & LR1) AND ~T-13 SEC (LL2 & LR2), A CMD IS SENT TO SET THE CHANNEL LOCKOUT LOGIC (ANY NON-BITE CMD WORD WITH A CHAN 7 ADDRESS). NOTE THAT THE GPC SOFTWARE DOES NOT SEND OUTPUT COMMANDS TO THE SRB MDM'S AFTER LAUNCH

THE DOL CMD LOCKOUT LOGIC CAN BE RESET (FOR PRE-LAUNCH OPERATIONS) ONLY BY THE FOLLOWING SEQUENCE:

THE RESET SEQUENCE IS INITIATED VIA A NON-BITE CMD WORD WITH A CHAN 27 ADRS AND A CMD DATA FIELD (BITS B9-B24) OF ALL LOGIC ZEROS (THIS ENABLES DUAL TIME-DELAY TIMER). ALL OTHER COMMANDS ARE IGNORED (TIMER IS HELD RESET)

A SECOND COMMAND (IDENTICAL TO THE FIRST MUST THEN BE SENT BETWEEN 600 TO 800 MILLISECONDS AFTER THE FIRST CMD IN ORDER TO CLEAR THE CMD LOCKOUT LOGIC (GUARANTEED 200 MILLISEC WINDOW)

IF THE SECOND CMD IS SENT PRIOR TO ~400 MSEC, THE TIMER IS RESET AND THE ENTIRE UNLOCK SEQUENCE MUST BE REPEATED

IF THE SECOND CMD IS SENT AFTER ~1080 MSEC (THE TIMER HAS RESET ITSELF), THE UNLOCK SEQUENCE MUST BE REPEATED (THE SECOND COMMAND IS INTERPRETED AS THE FIRST COMMAND OF A NEW UNLOCK SEQUENCE)

IF THE SECOND CMD IS SENT BETWEEN EITHER 400-600 MSEC OR 800-1080 MSEC, THE UNLOCK LOGIC MAY OR MAY NOT BE RESET DEPENDING UPON COMPONENT TOLERANCES

(4) FOR THE SRB DOL IOM, THE 'RESET' SIGNAL TO THE BUS RCVR HYBRID IS GROUNDED (LOGIC ZERO). THIS INHIBITS THE IOM FROM RESPONDING TO PWR-UP/PWR-DOWN RESET COMMANDS FROM AN SCU. PWR-UP/PWR-DOWN INITIALIZATION OF THE SRB DOL OUTPUT DISCRETES IS CONTROLLED ONLY BY THE +10V FAIL DETECTOR CIRCUIT IN THE BUS RECEIVER HYBRID

(3) DIL IOM INPUT SIGNAL OF +5VDC INTERPRETED AS A LOGIC 'ONE'; 0 VDC AS A LOGIC 'ZERO', (INPUTS ARE THRESHOLDED AGAINST A +2.25 VDC REF)

(2) DIFFERENTIAL AMPLIFIER THRESHOLD VALUES FOR SRB BILEVEL DISCRETE INPUT RECEIVERS SAME AS ORBITER IOM'S (DIL +2.25 VDC; DIH +8.00 VDC)

NOTES:

(1) IF BITE TEST SELECTED (BIT 6 = LOGIC 1), BIT 8 CONTROLS WHETHER BITE TEST 1 OR 2 IS EXERCISED. IF B8 = LOGIC 0, D-TYPE FLIP FLOP (D) REGISTER) WILL BE CLOCKED AT TIME SIGNAL 'CMV PRES' IS HIGH THUS FORCING Q OUTPUT HIGH (BITE TEST 1 SELECTED) IF B8 = LOGIC 1, 'BITE ENABLE' SIGNAL WILL REMAIN LOW DURING TIME THE 'CMV PRES' SIGNAL IS HIGH AND THE D-TYPE FLIP FLOP WILL NOT BE CLOCKED; THUS, Q-NOT OUTPUT REMAINS HIGH (BITE TEST 2 SELECTED)

IF BILEVEL DISCRETE SIGNALS ARE PRESENT WHEN SRB MDM IS POWERED UP, THE FIRST RESPONSE WORD FROM A SRB DIL OR DIH TYPE IOM MAY BE ERRONEOUS DUE TO BITE TEST BITS MASKING INPUT DATA. THEREAFTER, BITE LOGIC LATCH-UP IS CLEARED AND NORMAL IOM OPERATION FOLLOWS (AFFECTS PRELAUNCH ONLY)

(15) DUE TO POTENTIAL SINGLE-POINT FAILURES, SRB MDM'S HAVE BEEN MODIFIED TO ELIMINATE CROSS STRAPPING OF REDUNDANT PWR SUPPLIES INFLIGHT. PWR SUPPLY ISOLATION IS ACHIVED BY ISSUING 'ISOLATE ENABLE' CMDS VIA THE LPS SHORTLY PRIOR TO ISSUING MDM LOCKOUT CMDS. PWR SUPPLY FAIL/SRB ELECTRICAL BUS SWITCHOVER WILL CAUSE LOSS OF ASSOCIATED SRB HYDRAULICS CHANNEL (IF PRE-LAUNCH, THIS WILL CAUSE AN AUTOMATIC LAUNCH HOLD).

(22) SIO/LRU CHANNELIZATION ASSIGNMENTS

FF'S CARD 03	FF'S CARD 11	PF'S CARD 08	PE'S CARD 15
CH00 – IMU	CH00 – ADTA	CH00 – SPARE	CH00 – 1US/SL(PF1)
CH01 – MTU	CH01 – MLS	CH01 – PSP	CH01 – 1US/SL(PF1)
CH02 – STKR	CH02 – SPARE	CH02 – KU-BAND(PF1)	CH02 – SPARE
CH03 – RRI FF3)	CH03 – NSP	CH03 – SPARE	CH03 – SPARE

(21) TACAN CONTROL WORD FORMAT:

	1	0	X/Y	A/A	T/R	0	0	CH 1	CH 2	CH 4	CH 8	CH 10	CH 20	CH 40	CH 80	SELF TEST INIT	0	0	0	0	0	0	0	0	0	0	0	0	0	0	0	0
	1	2	3	4	5	6	7	8	9	10	11	12	13	14	15	16	17	18	19	20	21	22	23	24	25	26	27	28	29	30	31	32

(20) RADAR ALTIMETER DATA FORMAT:

	PARITY	4096	2048	1024	512	256	128	64	32	16	8	4	2	1	VALIDITY	CONTROL	
	1	2	3	4	5	6	7	8	9	10	11	12	13	14	15	16	

NOTE: THIS WORD IS TRANSMITTED BIT 16 FIRST

(19) TACAN GPC 'AUTO' SIGNAL IS ROUTED TO THE GPC(S) VIA DISCRETE IOM CARDS FF1-FF3 CARD 09 (DIH), CHAN 02 (BCE STRG 'B' PROM SEQUENCE INPUTS)

(18) TACAN RANGE DATA FORMAT:

	RANGE STATUS (NM)	BCD 100'S (NM)		BCD 10'S (NM)			BCD 1'S (NM)				BCD 1/10'S (NM)				BCD 1/100'S (NM)				RANGE SELF-TEST STATUS	RANGE LABEL									
		200	100	80	40	20	10	8	4	2	1	8/10	4/10	2/10	1/10	8/100	4/100	2/100	1/100											
	1	2	3	4	5	6	7	8	9	10	11	12	13	14	15	16	17	18	19	20	21	22	23	24	25	26	27	28	29	30	31	32

NOTE: THIS WORD IS TRANSMITTED BIT 32 FIRST

TACAN BEARING DATA FORMAT:

	PARITY	BEARING STATUS	MSB	BEARING (MSB=90 DEG, LSB=0.0439 DEG)	LSB											BEARING SELF-TEST STATUS	BEARING LABEL									
	1	2	3	4	5	6	7	8	9	10	11	12	13	14	15	16	17	18	19	20	21	22	23	24	25	26	27	28	29	30	31	32

NOTE: THIS WORD IS TRANSMITTED BIT 32 FIRST

(17) IF THE TACAN MODE SELECT SWITCH (PNL 07) IS IN 'GPC' POSITION, THE TACAN IOM CHAN 6 IS LOADED VIA GPC CMD DATA XFER (HFE OUTPUT). IF MODE SELECT SWITCH IS IN 'T/R' OR 'RCV', CHAN 6 IS LOADED WITH DATA BASED UPON CURRENT TACAN CHANNEL SELECT THUMBWHEELS

IF TACAN MODE IS 'GPC' AND THERE ARE NO GPC UPDATES (TACAN SOP INACTIVE OR DATA BUS/MDM FAILURE), THE TACAN CARD DEFAULTS TO PREVIOUS (PRIOR TO 'GPC' SELECT) CHANNEL SELECT THUMBWHEELS AS THE DATA SOURCE FOR CHAN 6

WHEN TACAN MODE SELECT SWITCH IS IN A NON 'GPC' POSITION, THE TACAN IOM ALWAYS SETS CHAN 6, BIT 15 (SYNC BIT) EQUAL TO LOGIC ONE AND BIT 15 (SELF-TEST INITIATE) TO LOGIC ZERO

(16) SIO IOM FORMAT (INPUT OR OUTPUT) APPEARING ON THE I/O DATA BUS BETWEEN THE MDM AND THE SHUTTLE SUB-SYSTEM IS 6 TO 12 VDC PEAK-TO-PEAK MANCHESTER II

	SYNC	16 DATA BITS																PARITY	
	1	2	3	4	5	6	7	8	9	10		15	16	17	18	19	20		

(23) THE THREE SIO IOM OUTPUT DISCRETES ARE EACH 3 TO 5 VDC DIFFERENTIAL SIGNALS (LOGIC 1 = +3 TO +5 VDC; LOGIC 0 = −3 TO −5 VDC)

WORD — BRACKETS A SERIAL I/O WORD, INDICATING A 20 BIT DATA TRANSFER TO/FROM THE MDM AND THE SHUTTLE SUBSYSTEM

MSG IN — BRACKETS A SERIAL I/O MESSAGE ALERTING THE SHUTTLE SUBSYSTEM TO SEND A DATA MESSAGE TO THE MDM

MSG OUT — BRACKETS A SERIAL I/O MESSAGE ALERTING THE SHUTTLE SUBSYSTEM TO RECEIVE A DATA MESSAGE FROM THE MDM

WD DISCRETE LINE GOES HI 2 1/2 MICRO-SEC AFTER MSG OUT (IN) DISCRETE GOES HI. START OF SYNC PULSE OCCURS 1 3/4 MICRO-SEC LATER FOR MSG OUT.

WD LINE STAYS HI FOR 25 MICRO-SEC, THEN GOES LO. MSG LINE STAYS HI UNTIL MSG TRANSMISSION COMPLETE

8 MDM 3

SIGNATURE		DATE	
DSGN	V. ORTIZ	8/10/78	NATIONAL AERONAUTICS AND SPACE ADMINISTRATION LYNDON B. JOHNSON SPACE CENTER HOUSTON, TEXAS
DR	V. ORTIZ		
ENGR	JAMES HILL		MULTIPLEXER/ DEMULTIPLEXER
ENGR		8/24/90	
APP	M.D. Ramsey	9/19/90	
APP			SPACE SHUTTLE — DWG NO 8.8
OMNIPLAN	B.K. Kimbrell	9.7.90	ALL
LTR E	PCN		126.5 X 34 — PAGE — SHEET 3 OF 3

BASIC REV E

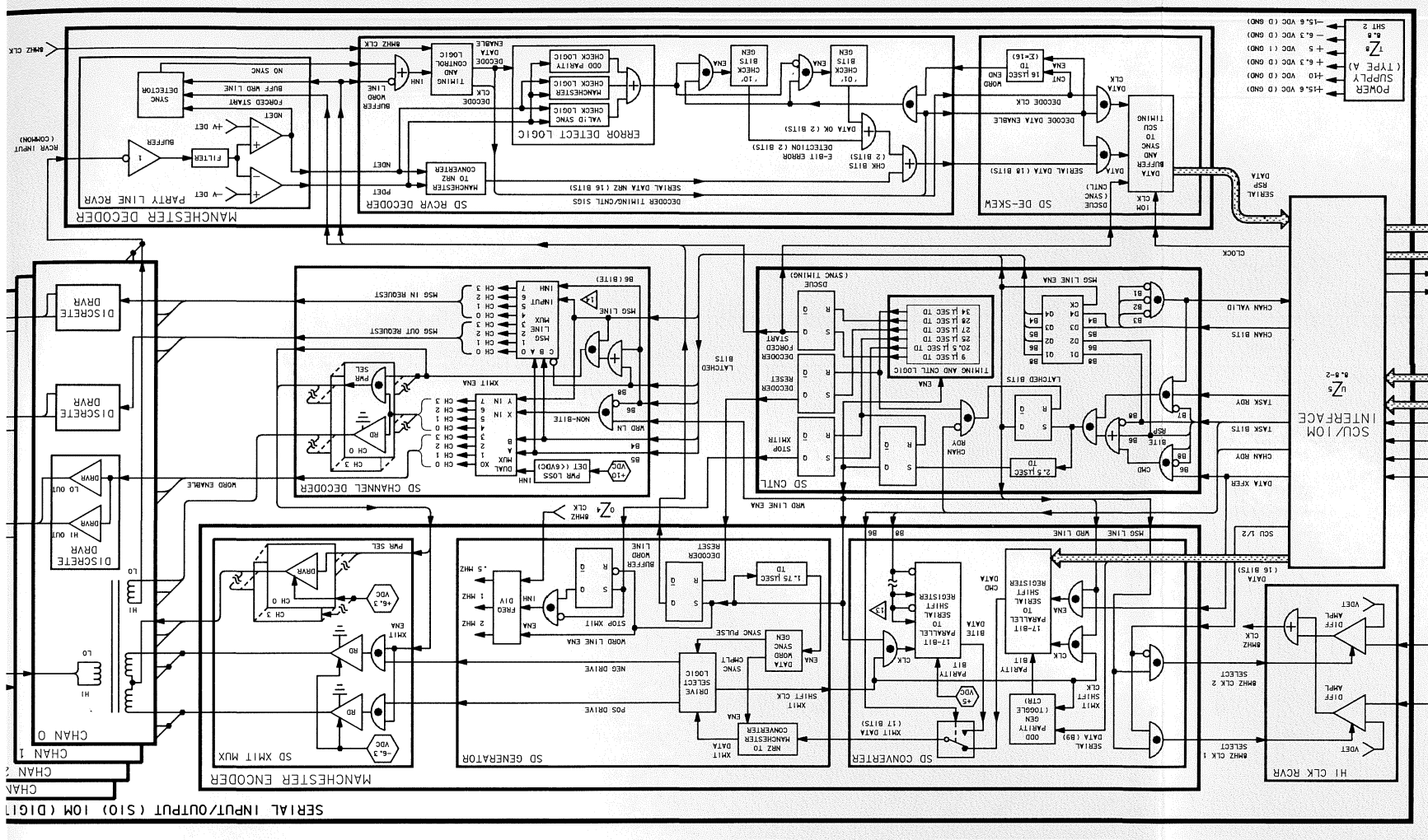

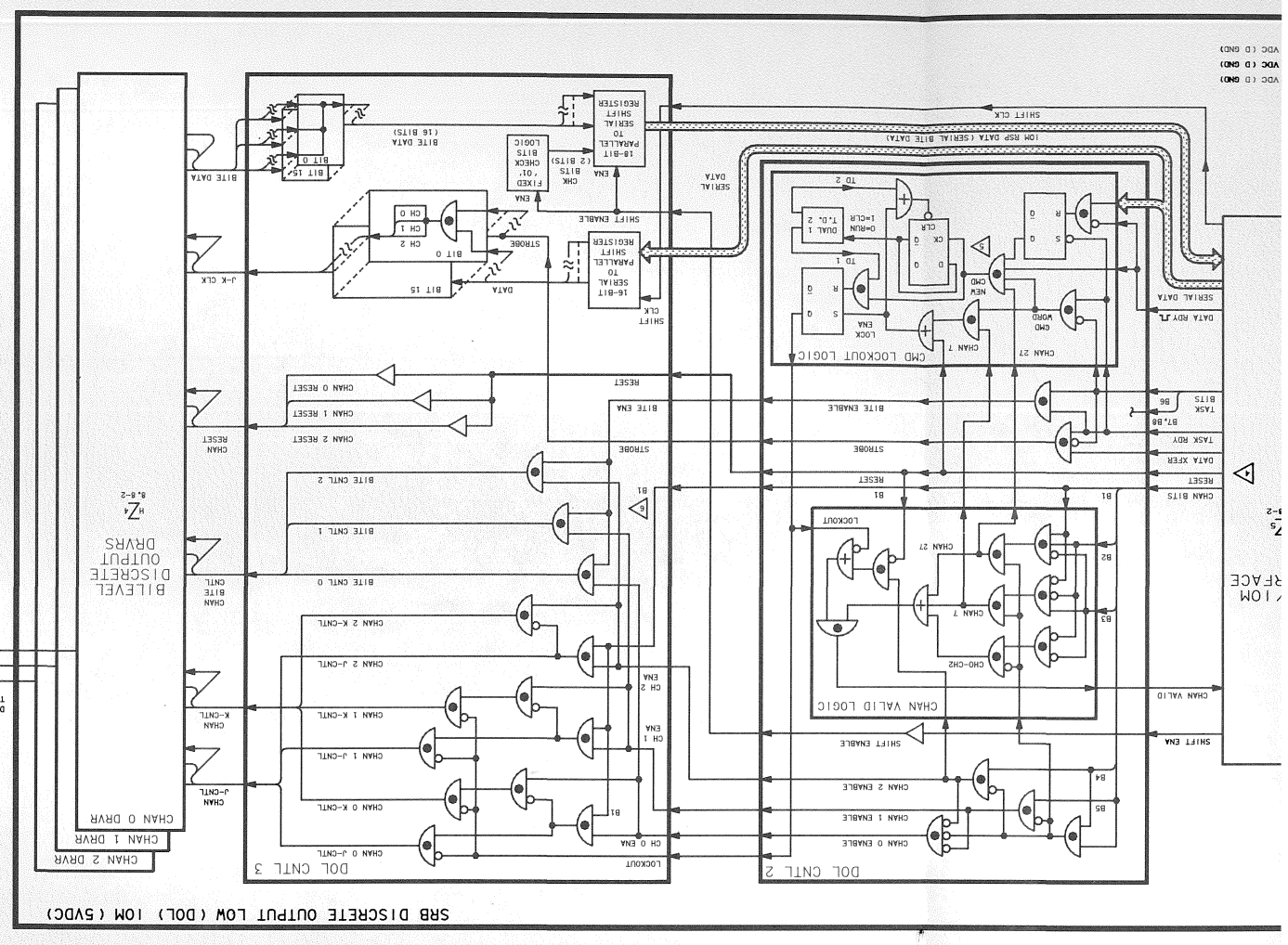

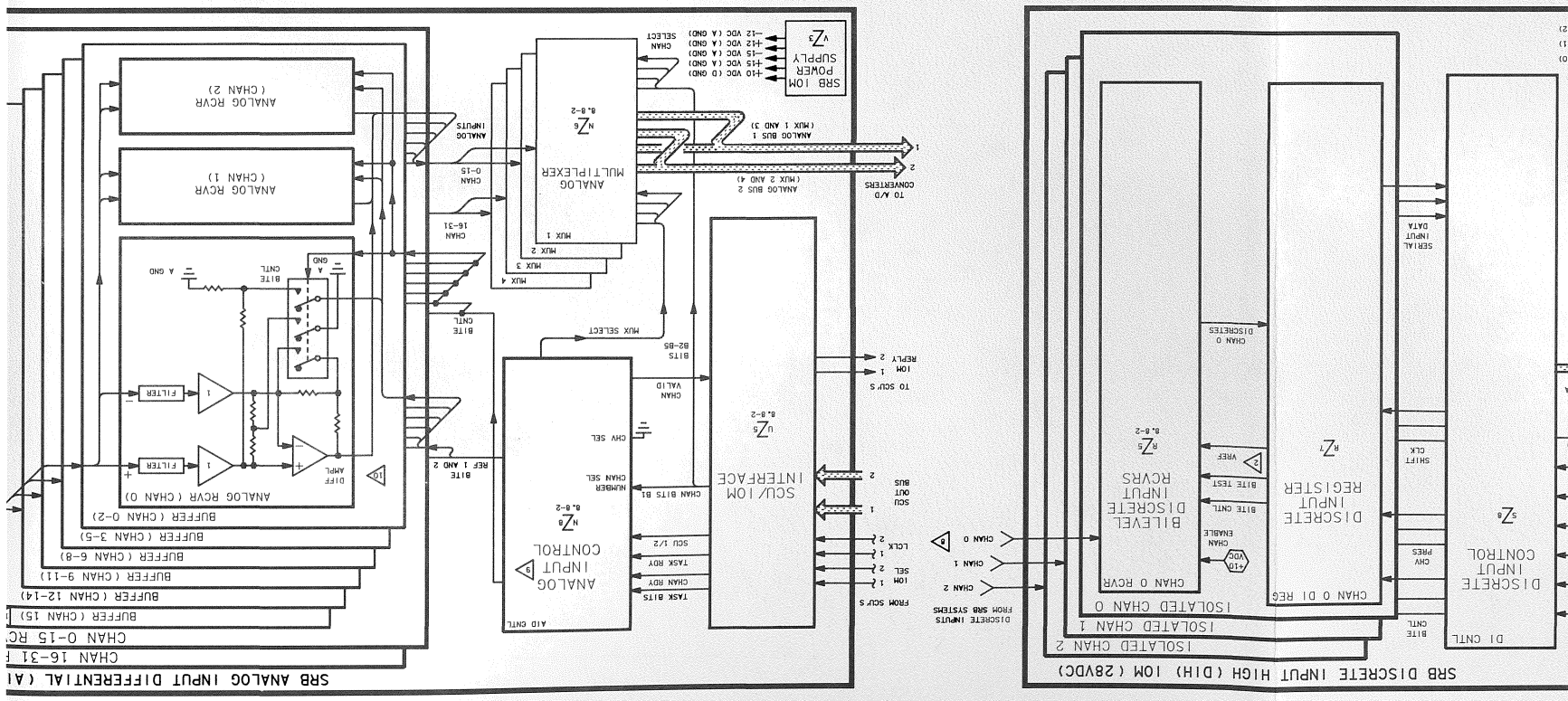

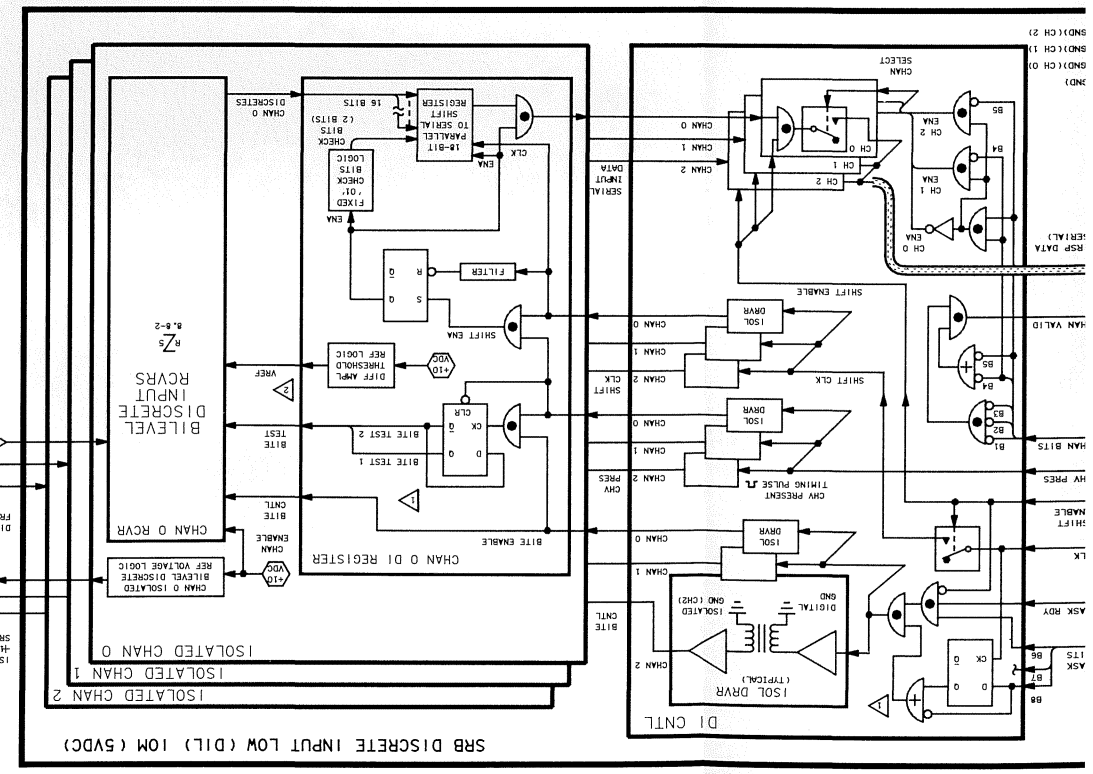

T S R Q P O N M L K J

DATE: 08/29/90 | NAME: VSH | VERSION: INK 3

W V U T S R Q P O N

8 7 6 5 4 3 2 1

IOM TASK:
000 - RSP DATA REQUEST (INPUT IOM'S)
001 - CMD DATA TRANSFER (OUTPUT IOM'S)
01X - RESET IOM
1X0 - BITE TEST 1
1X1 - BITE TEST 2

CHECK BITS:
01 - EXECUTE CMD
OTHER - ILLEGAL CODE (TERMINATES CMD)

INPUT IOM CMD FORMAT (FROM SCU)

CHAN ADRS					IOM TASK			CHECK BITS	
B1	B2	B3	B4	B5	B6	B7	B8	B9	B10

OUTPUT IOM CMD FORMATS (FROM SCU)

CHAN ADRS					IOM TASK			16 DATA BITS		CHECK BITS	
B1	B2	B3	B4	B5	B6	B7	B8	B9	B24	B25	B26

CHAN ADRS					IOM TASK			CHECK BITS	
B1	B2	B3	B4	B5	B6	B7	B8	B9	B10

IOM RESPONSE DATA WORD FORMAT (TO SCU)

16 DATA BITS					CHECK BITS			
B1	B2	B3	B4	B5	B15	B16	B17	B18

SRB DISCRETE INPUT LOW (DIL) IOM (5VDC)

SRB DISCRETE INPUT HIGH (DIH) IOM (2

SRB IOM PWR SUPPLY MODULE (IOM 4-IOM 7)

SRB IOM PWR SUPPLY MODULE (IOM 0-IOM 3)

SRB DISCRETE OUTPUT LOW (DOL) IOM (5VDC)

BASIC REV E

DATE: 08/17/90	NAME: VSH	VERSION: INIT 8
DATE: 09/25/95	NAME: JMB	VERSION: BPT 2
DATE: 01/24/96	NAME: MAG	VERSION: INIT 9

MASTER TIMING UNIT

UPDATE CKT NO 3 DATA
UPDATE CKT NO 2 DATA
UPDATE CKT NO 1 DATA

RD 4 RECEIVED (UD 3)
RD 4 RECEIVED (UD 2)
RD 4 RECEIVED (UD 1)

V75 X35560 VALID UPDATE RECEIVED (X36560) 5 5/5
BSR BIT 16
1=VALID UPDATE, 0=UPDATE EXECUTED

BITE STATUS REGISTER 5
BITE STATUS REGISTER 4
BITE STATUS REGISTER 3
BITE STATUS REGISTER 2
BITE STATUS REGISTER 1
REGISTER BITS 16 15 14 13 12 11 10 9 8 7 6 5 4 3 2 1
INPUT BITE DATA

BITE DATA
BITE, MET, GHT (ACCUM 3)
BITE, MET, GHT (ACCUM 2)
BITE, MET, GHT (ACCUM 1)

ACCUM 3 DATA
ACCUM 2 DATA
ACCUM 1 DATA
LOAD REGISTER (ACCUM 3)
LOAD REGISTER (ACCUM 2)
LOAD REGISTER (ACCUM 1)
CLOCK
WORD SIGNAL

FF 3 I/O INTERFACE
FF 2 I/O INTERFACE
FF 1 I/O INTERFACE
VOLTAGE REGULATOR
16 VDC A, 8 VDC A, 8 VDC B, 16 VDC B
WORD SIGNAL (UPDATE)
MESSAGE OUT (UPDATE) DISCRETE
10VDC
5VDC
UPDATE DATA (4 WORDS)
MANCHESTER ENCODER
+ DATA
- DATA
RCVR
XMITTER
MESSAGE OUT (UPDATE) DISCRETE
MESSAGE IN DISCRETE
WORD DISCRETE

VOTED DEMAND
VOTER
1 FAILED
2 FAILED
3 FAILED

OF 2 INTERFACE
OF 1 INTERFACE

LOAD REGISTER
1 MHZ CLOCK
WORD DISCRETE

BSR BIT 11
BSR BIT 10
BSR BIT 9

V75 X35510 VOTED DMD CHAN C FAIL (X36510) 0=GOOD 5 5/5
V75 X35500 VOTED DMD CHAN B FAIL (X36500) 0=GOOD 5 5/5
V75 X35490 VOTED DMD CHAN A FAIL (X36490) 0=GOOD 5 5/5

GMT IRIG-B FORMAT CONVERTER
CHAN 3 CONVERTER
CHAN 2 CONVERTER
CHAN 1 CONVERTER
NRZ TO IRIG-B
CHAN 3
CHAN 2
CHAN 1
100 HZ CLOCK
LOAD REGISTER
GMT (ACCUM 3)
GMT (ACCUM 2)
GMT (ACCUM 1)

IRIG B BITE
V75 X35520 ANY IRIG-B CHAN FAIL (X36520) 0=GOOD 5 5/5
BSR BIT 12

MET IRIG-B FORMAT CONVERTER (TYPICAL)
100 HZ CLOCK
LOAD REGISTER
MET (ACCUM 3)
MET (ACCUM 2)
MET (ACCUM 1)

F/D NO 3 4.608 MHZ
F/D NO 2 4.608 MHZ
9.6 KHZ

GPC-MTU CHAN 1 DAY/HR UPDATE V75K30208 (X31208) (X32208)
GPC-MTU CHAN 1 MIN/SEC UPDATE V75K30218 (X31218) (X32218)
GPC-MTU CHAN 1 MILLISEC UPDATE V75K30228 (X31228) (X32228)
GPC-MTU CHAN 1 MODE CONTROL V75K30718 (X31718) (X32718)
GPC-MTU CHAN 1 COINCIDENCE TIME V75K30728 (X31728) (X32728)
FF 1 (FF 2) (FF 3)

TO GPCS

MESSAGE IN DISCRETE
MESSAGE OUT DISCRETE
WORD DISCRETE

V75 W3504D MTU 1 - GHT (W3604D) 5 5/5
V75 W3514D MTU 1 - MET (W3614D) 5 5/5
V75 M3540P MTU BITE 5 5/5
OF 1 (OF 2)

NETWORK CONSEC 1
NETWORK CONSEC 2*
PDI
FWD MSN TIMER GHT
FWD MISSION TIMER MET

ORBITER TIMING BUFFER
PAYLOAD TIMING BUFFER
GHT/MET
GHT
MET
MADS
VSU CCTV
ACIP (OV 102 ONLY)
SHALL PAYLOAD
SEP CAMERA
PAYLOAD
AFT MISSION TIMER

SIGNAL PROCESSOR (PAYLOAD) 1024 KHZ
FM SIGNAL PROCESSOR 1 1024 KHZ
FM SIGNAL PROCESSOR 2 1024 KHZ
1024 KHZ
4.608 MHZ
100 HZ
10 HZ
1 KHZ
TO PAYLOAD STA DISTRIBUTION PNL

10 HZ FWD EVENT TIMER
AFT EVENT TIMER
PCM MASTER UNIT NO 1
PCM MASTER UNIT NO 2

1. THE 9.6 KHZ TIMING TO THE EPS INVERTER ARRAY HAS BEEN DISCONNECTED
2. PML L12 IS MISSION RECONFIGURABLE
3. MAXIMUM OUTPUT OF THE MTU, BOTH GHT AND MET IS 399:23:59:59.999.875
4. GHT OUTPUT WILL ROLLOVER TO 001:001:001:001.000.000 AT 125 MICROSECONDS PAST GHT OF:
   - 365:23:59:59.999.875
   - 366:23:59:59.999.875
   - 375:23:59:59.999.875
   - 376:23:59:59.999.875
   - 399:23:59:59.999.875
5. CYCLING MTU POWER WILL RESULT IN MET RESET TO ZERO AND GHT RESET TO DAY ONE. THIS IS NOT A CONTROLLED FUNCTION, BUT A RESULT OF THE CIRCUIT CHARACTERISTICS
6. BITE WILL BE SET IF DRIFT DIFFERENTIAL EXCEEDS 0.04 HZ DURING A 1 MINUTE CYCLE
7. EACH TIMING BUFFER OUTPUTS 8 GHT AND 4 MET IRIG B FORMAT SIGNALS
8. THE CIRCUIT FOR THE VOTER LOGIC IS THE SAME AS THE CIRCUIT WITHIN THE VOTED DEMAND BLOCK
9. WHEN A MET OR GHT RESET IS ISSUED THE MET RESET TIME IS 000:000:000:00.000 AND THE GHT RESET IS 001:001:001:00.000
10. THE IRIG-B SHIFT REGISTERS CONTAIN ONLY THE TIME DATA FOR DAYS - HOURS - MINUTES - SECONDS
11. DEMAND OUTPUT WORD FORMAT

GHT: WORD 1, WORD 2, WORD 3 — DATA 4 19
MET: WORD 4, WORD 5, WORD 6 — DATA 4 19
BITE STATUS: WORD 7 — DATA 4 19

REFERENCE BITE STATUS REGISTER

BIT	FUNCTION
WORD 1/4	
1-03	SYNC
4-13	DAYS
14-19	HOURS
20	PARITY
WORD 2/5	
1-03	SYNC
4-10	MINUTES
11-17	SECONDS
18-19	SPARE
20	PARITY
WORD 3/6	
1-03	SYNC
4-06	SPARE
7-19	MILLISECONDS
20	PARITY

BIT	FUNCTION	0	1
WORD 7 (BITE)			
1-3	WORD SYNC		
4	CONTROLLING OSC	NO 2 GOOD	NO 1 FAIL
5	OSC NO 1 AMPLITUDE		
6	OSC NO 2 AMPLITUDE		
7	OSC FREQUENCY DIFFERENCE		
8	OSC NO 1 TEMP		
9	OSC NO 2 TEMP		
10	PS NO 1 VOLT AMPLITUDE		
11	PS NO 2 VOLT AMPLITUDE		
12	VOTED DEMAND CH-A		
13	VOTED DEMAND CH-B		
14	VOTED DEMAND CH-C		
15	ANY IRIG "B" CHANNEL		
16	FREQ DIVISION NO 1		
17	FREQ DIVISION NO 2		
18	FREQ DIVISION NO 3		
19	VALID UPDATE RECEIVED 1 = VALID UPDATE RECEIVED 0 = UPDATE EXECUTED OR INVALID TRANSMISSION IF BIT NEVER SET TO 1	GOOD	FAIL
20	PARITY		

12. UPDATE WORD FORMAT

WORD 1, WORD 2, WORD 3, WORD 4 — DATA 4 19

BIT	FUNCTION
WORD 1	
1-03	SYNC
4-13	DAYS
14-19	HOURS
20	PARITY
WORD 2	
1-03	SYNC
4-10	MINUTES
11-17	SECONDS
18-19	SPARE
20	PARITY

BIT	FUNCTION
WORD 3	
1-03	SYNC
4-06	SPARE
7-19	MILLISECONDS
20	PARITY
WORD 4	
1-03	WORD SYNC
4-07	MODE CONTROL
8-14	COINCIDENCE TIME (MINUTES)
15-19	SPARE
20	PARITY

13. NOT USED
14. THE MTU IS LOCATED IN FORWARD BAY 3B. FINE TUNING OF EACH OSCILLATOR IS POSSIBLE ON THE GROUND THROUGH AN EXTERNAL ADJUSTMENT SCREW TO A RESOLUTION OF ±1 PART IN 10^{10} BY USING A CESIUM BEAM

NOTES: 15. DETECT RELATIVE FREQUENCY DIFFERENTIAL OF 0.04 HZ WITHIN A 60 SEC PERIOD

9 MTU

SIGNATURE		DATE	
DSGN	L. DUMIS	11/15/79	NATIONAL AERONAUTICS AND SPACE ADMINISTRATION LYNDON B. JOHNSON SPACE CENTER HOUSTON, TEXAS
DR			
ENGR	T. ALLEN		MASTER TIMING UNIT
ENGR		1/30/96	
APP		1/30/96	
APP	H. E. Downey	1-31-96	SPACE SHUTTLE / DWG NO 8.9
CADS	S. K. Lunkes	6.7.96	ALL
LTR	E	PCN 6	126.5 X 34 / PAGE / SHEET 1 OF 1

BASIC REV E-6

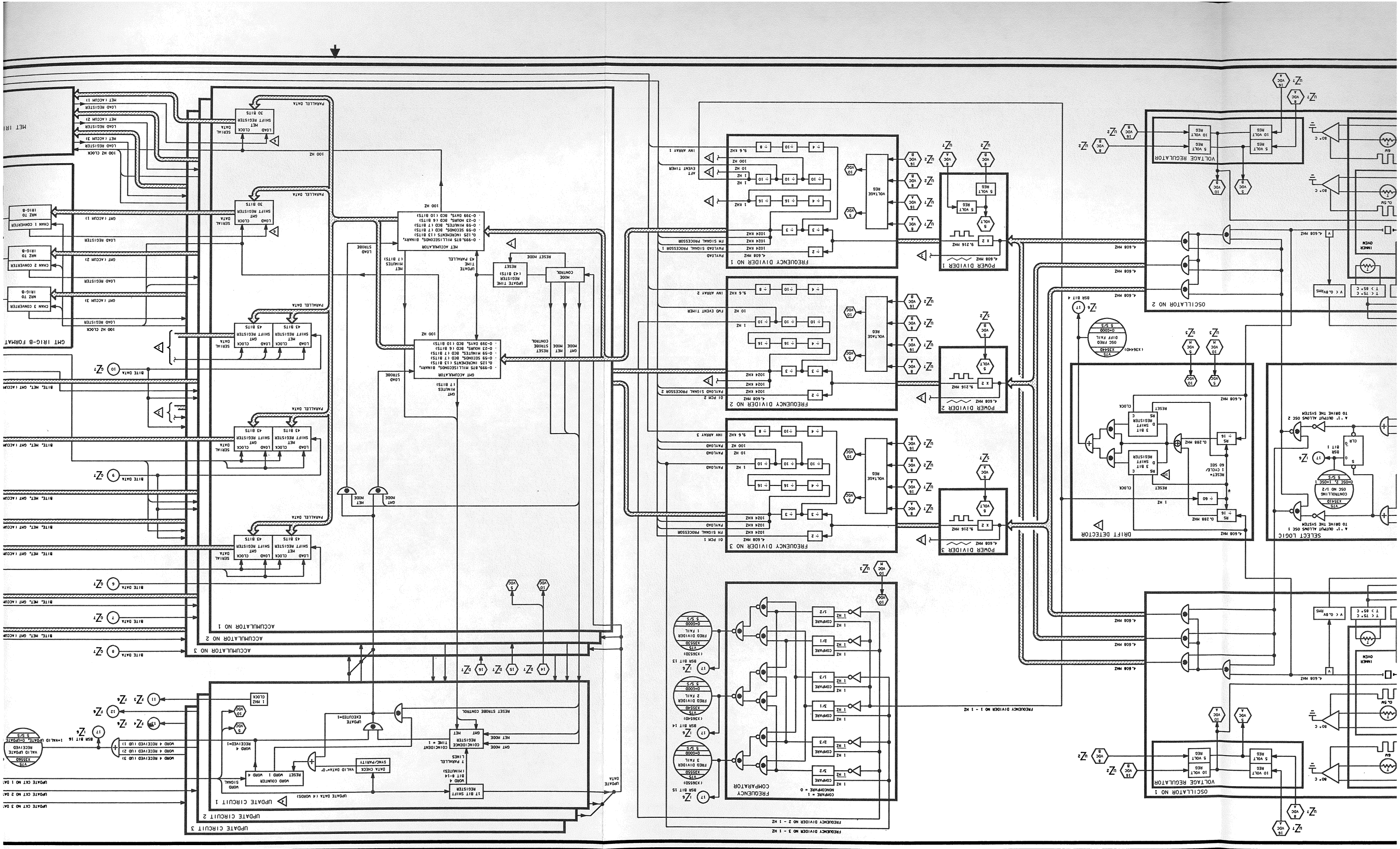

T S R Q P O N M L K J

DATE: 01/24/96 | NAME: MAG | VERSION: INR9

W V U T S R Q P O N

8 7 6 5 4 3 2 1

ESS 1BC

$V_{ESS1BC\ 013\ \&\ R15}$

MTU A

3A

PWL 013A CB4

HMC

$V_{HMC\ 016}$

AUX TIMING BUFFER

3A

PWL 016B CB2

ORBITER TIMING BUFFER

HASTER TIMING UNIT

OSC 1

OSC 2

AUTO

PWL 06 S15

OF 3

V75 S2236E MTU NO 1 OSC SELECT 1=OSC 1 1 S/S

V75 S2237E MTU NO 2 OSC SELECT 1=OSC 2 1 S/S

ESS 2CA

$V_{ESS2CA\ 013\ \&\ R15}$

MTU B

3A

PWL 013C CB12

PL

V_{CABPL2}

TIMING BUFFER

5A

PWL L12 CB_

PAYLOAD TIMING BUFFER

POWER SUPPLY A

FILTER

REGULATOR

DC/DC CONVERTER

8 VDC A

16 VDC A

POWER SUPPLY B

FILTER

REGULATOR

DC/DC CONVERTER

8 VDC B

16 VDC B

EXTERNAL OSCILLATOR ADJUST

OSCILLATOR NO 1

OUTER OVEN

80° C

6W

0.5W

INNER OVEN

T < 75° C T > 85° C

V < 0.8V RMS

VOLTAGE REGULATOR

10 VOLT REG

5 VOLT REG

16 VDC A

8 VDC A

16 VDC B

8 VDC B

5 VDC A

10 VDC A

5 VDC B

10 VDC B

5 VDC H

10 VDC H

4.608 MHZ

V75 X3545D OSC NO 1 TEMP FAIL 0=GOOD 5 S/S (X3645D)

V75 X3542D OSC NO 1 AMPTD FAIL 0=GOOD 5 S/S (X3642D)

V75 X3547D PS NO 1 VOLT AMPTD FAIL 0=GOOD 5 S/S (X3647D)

V75 X3548D PS NO 2 VOLT AMPTD FAIL 0=GOOD 5 S/S (X3648D)

V75 X3543D OSC NO 2 AMPTD FAIL 0=GOOD 5 S/S (X3643D)

V75 X3546D OSC NO 2 TEMP FAIL 0=GOOD 5 S/S (X3646D)

V75 X3544D OSC FREQ DIFF FAIL 0=GOOD 5 S/S (X3644D)

BSR BIT 5

BSR BIT 2

BSR BIT 7

BSR BIT 3

BSR BIT 6

BSR BIT 8

BSR BIT 4

BITE

V ≤ 13.8 V ≥ 18.6

V ≤ 6.9 V ≥ 9.2

SELECT LOGIC

A "1" OUTPUT ALLOWS OSC 1 TO DRIVE THE SYSTEM

A "1" OUTPUT ALLOWS OSC 2 TO DRIVE THE SYSTEM

AMP 1

AMP 2

TEMP 1

TEMP 2

SW 1

SW 2

V75 X3541D CONTROLLING OSC NO 1/2 0=OSC 2, 1=OSC 1 5 S/S

BSR BIT 1

DRIFT DETECTOR

4.608 MHZ

RS ÷ 16

0.288 MHZ

÷ 60

1 HZ

RESET= 1 CYCLE/ 60 SEC

RESET

CLOCK

3 BIT D SHIFT REGISTER RS C

POWER DIVIDER 3

4.608 MHZ

x 2

9.216 MHZ

6 VOLT

POWER DIVIDER 2

POWER DIVIDER 1

5 VOLT REG

FREQUENCY DIVIDER NO 3 - 1 HZ

FREQUENCY DIVIDER NO 2 - 1 HZ

FREQUENCY DIVIDER NO 1 - 1 HZ

FREQUENCY COMPARATOR

COMPARE = 1 NONCOMPARE = 0

1 HZ

COMPARE 3/2

COMPARE 2/3

COMPARE 3/1

COMPARE 1/3

COMPARE 2/1

COMPARE 1/2

V75 X3555D FREQ DIVIDER 3 FAIL 0=GOOD 5 S/S

V75 X3554D FREQ DIVIDER 2 FAIL 0=GOOD 5 S/S

V75 X3553D FREQ DIVIDER 1 FAIL 0=GOOD 5 S/S

BSR BIT 15 (X3655D)

BSR BIT 14 (X3654D)

BSR BIT 13 (X3653D)

FREQUENCY DIVIDER NO 3

FREQUENCY DIVIDER NO 2

FREQUENCY DIVIDER NO 1

÷ 2 ÷ 3 ÷ 4 ÷ 10 ÷ 16 ÷ 8

4.608 MHZ

1024 KHZ

1 HZ

10 HZ

100 HZ

1 KHZ

9.6 KHZ

01 PCM 1

FH SIGNAL PROCESSOR

PAYLOAD

INV ARRAY 3

01 PCM 2

PAYLOAD SIGNAL PROCESSOR 2

FWD EVENT TIMER

INV ARRAY 2

PAYLOAD SIGNAL PROCESSOR 1

FH SIGNAL PROCESSOR

AFT EVENT TIMER

INV ARRAY 1

VOLTAGE REG

UPDATE DATA

GMT MODE

MET MODE

RESET STROBE CONTROL

MODE CONTROL

RESET MODE

BASIC REV E-6

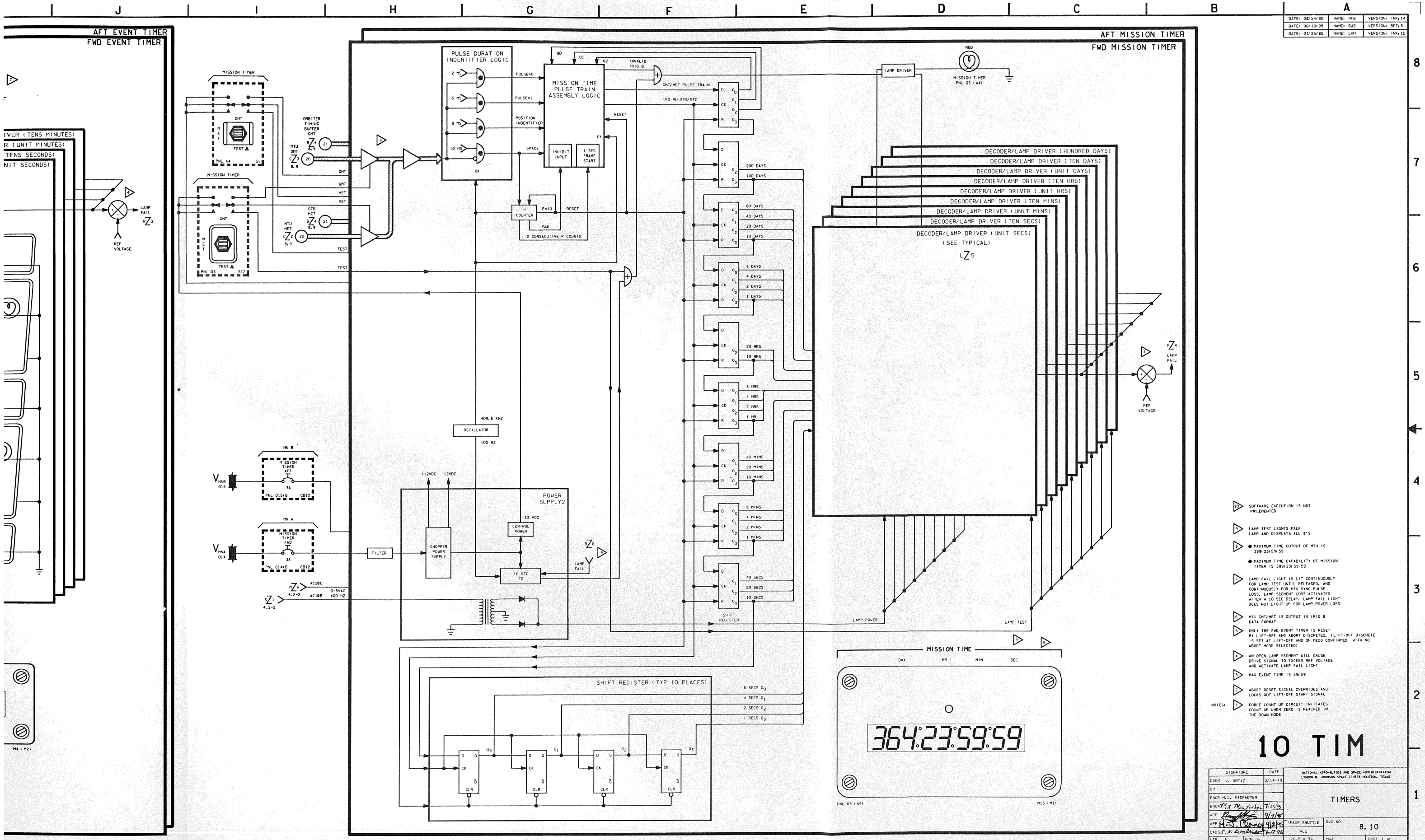

DATE: 08/24/90	NAME: MFB	VERSION: INK: 14
DATE: 06/19/95	NAME: BJB	VERSION: BPT: 8
DATE: 07/25/95	NAME: LAM	VERSION: INK: 15

10 SOFTWARE EXECUTION IS NOT IMPLEMENTED

9 LAMP TEST LIGHTS HALF LAMP AND DISPLAYS ALL 8'S

8 ● MAXIMUM TIME OUTPUT OF MTU IS 399:23:59:59

● MAXIMUM TIME CAPABILITY OF MISSION TIMER IS 399:23:59:59

7 LAMP FAIL LIGHT IS LIT CONTINUOUSLY FOR LAMP TEST UNTIL RELEASED, AND CONTINUOUSLY FOR MTU SYNC PULSE LOSS. LAMP SEGMENT LOSS ACTIVATES AFTER A 10 SEC DELAY. LAMP FAIL LIGHT DOES NOT LIGHT UP FOR LAMP POWER LOSS

6 MTU GMT/MET IS OUTPUT IN IRIG B DATA FORMAT

5 ONLY THE FWD EVENT TIMER IS RESET BY LIFT-OFF AND ABORT DISCRETES. (LIFT-OFF DISCRETE IS SET AT LIFT-OFF AND ON MECO CONFIRMED WITH NO ABORT MODE SELECTED)

4 AN OPEN LAMP SEGMENT WILL CAUSE DRIVE SIGNAL TO EXCEED REF VOLTAGE AND ACTIVATE LAMP FAIL LIGHT

3 MAX EVENT TIME IS 59:59

2 ABORT RESET SIGNAL OVERRIDES AND LOCKS OUT LIFT-OFF START SIGNAL

NOTES: 1 FORCE COUNT UP CIRCUIT INITIATES COUNT UP WHEN ZERO IS REACHED IN THE DOWN MODE

10 TIM

SIGNATURE	DATE	NATIONAL AERONAUTICS AND SPACE ADMINISTRATION LYNDON B. JOHNSON SPACE CENTER HOUSTON, TEXAS
DSGN V. ORTIZ	2/14/79	TIMERS
DR		
ENGR M.L. MACFADYEN		
ENGR M.L. MacFadyen	7/25/95	
APP [signature]	9/7/95	
APP H.J. Clancy	9/8/95	SPACE SHUTTLE ALL — DWG NO 8.10
CADS S.K. Linderman	6-17-96	
LTR E — PCN 6		126.5 X 34 — PAGE — SHEET 1 OF 1

BASIC REV E-6

AFT EVENT TIMER

FWD EVENT TIMER

EVENT TIME

MIN SEC

PWL F7 (A4)

P4 (P2)

65:65

DECODER/LAMP DRIVER (UNIT SECONDS)

DECODER/LAMP DRIVER (TENS SECONDS)

DECODER/LAMP DRIVER (UNIT MINUTES)

DECODER/LAMP DRIVER (TENS MINUTES)

LAMP DRIVER

LAMP TEST

LAMP DRIVER (TYPICAL)

INVAL.LO LITE

RED

EVENT TIME

PWL F7 (A4)

REF VOLTAGE

LAMP FAIL

MISSION TIMER

CMT

TEST

SEL

PWL A4

PWL Q13

PWL Q14

PWB Q15

UP/DOWN COUNTER (MINUTES)

UP/DOWN COUNTER (SECONDS)

UNIT SEC

UNIT MIN

TEN SEC

TEN MIN

CARRYOUT TO MINUTES COUNTER

RESET

SET

UP

DN

CLR

CK

D

Q

S

NUMERICAL SET

FORCE COUNT UP

RESET/START

START

STOP

ABORT/ LIFTOFF RESET

CARRY OUT TO MINUTES COUNTER

MIN

INVAL.LO SYNC

INVAL.LO LITE

LAMP TEST

LAMP POWER

POWER SUPPLY

CHOPPER POWER SUPPORT

FILTER

CONTROL POWER

13VDC

AC28C

AC10B

400 HZ

0-5VAC

10 SEC

100 HZ

TO ALL MODULES

+12VDC

-12VDC

LAMP FAIL

OSCILLATOR

1.6 KHZ

÷160

10 HZ

÷10

1 HZ

÷12VDC

2 ± 0.25VDC

NOMINAL 3.5 ± 2.5VDC

<15 MS

LIFT-OFF START

ABORT RESET

MTU 10 HZ SQUARE WAVE

NUMERICAL SET (MIN/SEC)

PWL D14-3

PWL D15-3A

EVENT TIMER ALT

EVENT TIMER

PWL A

PWL B

FF 1

FF 4

V7X0613X

V13X0614X

5Z1

4Z-2

7Z6

8Z7

9Z6

10Z6

11Z6

12Z6

13Z6

14Z6

15Z6

16Z6

17Z6

18Z6

19Z6

20Z6

21Z6

22Z6

23Z6

24Z6

25Z6

26Z6

27Z6

28Z6

29Z6

30Z6

31Z6

32Z6

33Z6

34Z6

35Z6

36Z6

37Z6

38Z6

39Z6

40Z6

41Z6

42Z6

43Z6

44Z6

45Z6

46Z6

47Z6

48Z6

49Z6

50Z6

51Z6

52Z6

53Z6

54Z6

55Z6

56Z6

57Z6

58Z6

59Z6

60Z6

61Z6

62Z6

63Z6

64Z6

65Z6

66Z6

67Z6

68Z6

69Z6

70Z6

71Z6

72Z6

73Z6

74Z6

75Z6

76Z6

77Z6

78Z6

79Z6

80Z6

81Z6

82Z6

83Z6

84Z6

85Z6

86Z6

87Z6

88Z6

89Z6

90Z6

91Z6

92Z6

93Z6

94Z6

95Z6

96Z6

97Z6

98Z6

99Z6

100Z6

101Z6

102Z6

103Z6

104Z6

105Z6

106Z6

107Z6

108Z6

109Z6

110Z6

111Z6

112Z6

113Z6

114Z6

115Z6

116Z6

117Z6

118Z6

119Z6

120Z6

121Z6

122Z6

123Z6

124Z6

125Z6

126Z6

127Z6

128Z6

129Z6

130Z6

131Z6

132Z6

133Z6

134Z6

135Z6

136Z6

137Z6

138Z6

139Z6

140Z6

141Z6

142Z6

143Z6

144Z6

145Z6

146Z6

147Z6

148Z6

149Z6

150Z6

151Z6

152Z6

153Z6

154Z6

155Z6

156Z6

157Z6

158Z6

159Z6

160Z6

161Z6

162Z6

163Z6

164Z6

165Z6

166Z6

167Z6

168Z6

169Z6

170Z6

171Z6

172Z6

173Z6

174Z6

175Z6

176Z6

177Z6

178Z6

179Z6

180Z6

181Z6

182Z6

183Z6

184Z6

185Z6

186Z6

187Z6

188Z6

189Z6

190Z6

191Z6

192Z6

193Z6

194Z6

195Z6

196Z6

197Z6

198Z6

199Z6

200Z6

201Z6

202Z6

203Z6

204Z6

205Z6

206Z6

207Z6

208Z6

209Z6

210Z6

211Z6

212Z6

213Z6

214Z6

215Z6

216Z6

217Z6

218Z6

219Z6

220Z6

221Z6

222Z6

223Z6

224Z6

225Z6

226Z6

227Z6

228Z6

229Z6

230Z6

231Z6

232Z6

233Z6

234Z6

235Z6

236Z6

237Z6

238Z6

239Z6

240Z6

241Z6

242Z6

243Z6

244Z6

245Z6

246Z6

247Z6

248Z6

249Z6

250Z6

251Z6

252Z6

253Z6

254Z6

255Z6

256Z6

257Z6

258Z6

259Z6

260Z6

261Z6

262Z6

263Z6

264Z6

265Z6

266Z6

267Z6

268Z6

269Z6

270Z6

271Z6

272Z6

273Z6

274Z6

275Z6

276Z6

277Z6

278Z6

279Z6

280Z6

281Z6

282Z6

283Z6

284Z6

285Z6

286Z6

287Z6

288Z6

289Z6

290Z6

291Z6

292Z6

293Z6

294Z6

295Z6

296Z6

297Z6

298Z6

299Z6

300Z6

301Z6

302Z6

303Z6

304Z6

305Z6

306Z6

307Z6

308Z6

309Z6

310Z6

311Z6

312Z6

313Z6

314Z6

315Z6

316Z6

317Z6

318Z6

319Z6

320Z6

321Z6

322Z6

323Z6

324Z6

325Z6

326Z6

327Z6

328Z6

329Z6

330Z6

331Z6

332Z6

333Z6

334Z6

335Z6

336Z6

337Z6

338Z6

339Z6

340Z6

341Z6

342Z6

343Z6

344Z6

345Z6

346Z6

347Z6

348Z6

349Z6

350Z6

351Z6

352Z6

353Z6

354Z6

355Z6

356Z6

357Z6

358Z6

359Z6

360Z6

361Z6

362Z6

363Z6

364Z6

365Z6

366Z6

367Z6

368Z6

369Z6

370Z6

371Z6

372Z6

373Z6

374Z6

375Z6

376Z6

377Z6

378Z6

379Z6

380Z6

381Z6

382Z6

383Z6

384Z6

385Z6

386Z6

387Z6

388Z6

389Z6

390Z6

391Z6

392Z6

393Z6

394Z6

395Z6

396Z6

397Z6

398Z6

399Z6

400Z6

401Z6

402Z6

403Z6

404Z6

405Z6

406Z6

407Z6

408Z6

409Z6

410Z6

411Z6

412Z6

413Z6

414Z6

415Z6

416Z6

417Z6

418Z6

419Z6

420Z6

421Z6

422Z6

423Z6

424Z6

425Z6

426Z6

427Z6

428Z6

429Z6

430Z6

431Z6

432Z6

433Z6

434Z6

435Z6

436Z6

437Z6

438Z6

439Z6

440Z6

441Z6

442Z6

443Z6

444Z6

445Z6

446Z6

447Z6

448Z6

449Z6

450Z6

451Z6

452Z6

453Z6

454Z6

455Z6

456Z6

457Z6

458Z6

459Z6

460Z6

461Z6

462Z6

463Z6

464Z6

465Z6

466Z6

467Z6

468Z6

469Z6

470Z6

471Z6

472Z6

473Z6

474Z6

475Z6

476Z6

477Z6

478Z6

479Z6

480Z6

481Z6

482Z6

483Z6

484Z6

485Z6

486Z6

487Z6

488Z6

489Z6

490Z6

491Z6

492Z6

493Z6

494Z6

495Z6

496Z6

497Z6

498Z6

499Z6

500Z6

501Z6

502Z6

503Z6

504Z6

505Z6

506Z6

507Z6

508Z6

509Z6

510Z6

511Z6

512Z6

513Z6

514Z6

515Z6

516Z6

517Z6

518Z6

519Z6

520Z6

521Z6

522Z6

523Z6

524Z6

525Z6

526Z6

527Z6

528Z6

529Z6

530Z6

531Z6

532Z6

533Z6

534Z6

535Z6

536Z6

537Z6

538Z6

539Z6

540Z6

541Z6

542Z6

543Z6

544Z6

545Z6

546Z6

547Z6

548Z6

549Z6

550Z6

551Z6

552Z6

553Z6

554Z6

555Z6

556Z6

557Z6

558Z6

559Z6

560Z6

561Z6

562Z6

563Z6

564Z6

565Z6

566Z6

567Z6

568Z6

569Z6

570Z6

571Z6

572Z6

573Z6

574Z6

575Z6

576Z6

577Z6

578Z6

579Z6

580Z6

581Z6

582Z6

583Z6

584Z6

585Z6

586Z6

587Z6

588Z6

589Z6

590Z6

591Z6

592Z6

593Z6

594Z6

595Z6

596Z6

597Z6

598Z6

599Z6

600Z6

601Z6

602Z6

603Z6

604Z6

605Z6

606Z6

607Z6

608Z6

609Z6

610Z6

611Z6

612Z6

613Z6

614Z6

615Z6

616Z6

617Z6

618Z6

619Z6

620Z6

621Z6

622Z6

623Z6

624Z6

625Z6

626Z6

627Z6

628Z6

629Z6

630Z6

631Z6

632Z6

633Z6

634Z6

635Z6

636Z6

637Z6

638Z6

639Z6

640Z6

641Z6

642Z6

643Z6

644Z6

645Z6

646Z6

647Z6

648Z6

649Z6

650Z6

651Z6

652Z6

653Z6

654Z6

655Z6

656Z6

657Z6

658Z6

659Z6

660Z6

661Z6

662Z6

663Z6

664Z6

665Z6

666Z6

667Z6

668Z6

669Z6

670Z6

671Z6

672Z6

673Z6

674Z6

675Z6

676Z6

677Z6

678Z6

679Z6

680Z6

681Z6

682Z6

683Z6

684Z6

685Z6

686Z6

687Z6

688Z6

689Z6

690Z6

691Z6

692Z6

693Z6

694Z6

695Z6

696Z6

697Z6

698Z6

699Z6

700Z6

701Z6

702Z6

703Z6

704Z6

705Z6

706Z6

707Z6

708Z6

709Z6

710Z6

711Z6

712Z6

713Z6

714Z6

715Z6

716Z6

717Z6

718Z6

719Z6

720Z6

721Z6

722Z6

723Z6

724Z6

725Z6

726Z6

727Z6

728Z6

729Z6

730Z6

731Z6

732Z6

733Z6

734Z6

735Z6

736Z6

737Z6

738Z6

739Z6

740Z6

741Z6

742Z6

743Z6

744Z6

745Z6

746Z6

747Z6

748Z6

749Z6

750Z6

751Z6

752Z6

753Z6

754Z6

755Z6

756Z6

757Z6

758Z6

759Z6

760Z6

761Z6

762Z6

763Z6

764Z6

765Z6

766Z6

767Z6

768Z6

769Z6

770Z6

771Z6

772Z6

773Z6

774Z6

775Z6

776Z6

777Z6

778Z6

779Z6

780Z6

781Z6

782Z6

783Z6

784Z6

785Z6

786Z6

787Z6

788Z6

789Z6

790Z6

791Z6

792Z6

793Z6

794Z6

795Z6

796Z6

797Z6

798Z6

799Z6

800Z6

801Z6

802Z6

803Z6

804Z6

805Z6

806Z6

807Z6

808Z6

809Z6

810Z6

811Z6

812Z6

813Z6

814Z6

815Z6

816Z6

817Z6

818Z6

819Z6

820Z6

821Z6

822Z6

823Z6

824Z6

825Z6

826Z6

827Z6

828Z6

829Z6

830Z6

831Z6

832Z6

833Z6

834Z6

835Z6

836Z6

837Z6

838Z6

839Z6

840Z6

841Z6

842Z6

843Z6

844Z6

845Z6

846Z6

847Z6

848Z6

849Z6

850Z6

851Z6

852Z6

853Z6

854Z6

855Z6

856Z6

857Z6

858Z6

859Z6

860Z6

861Z6

862Z6

863Z6

864Z6

865Z6

866Z6

867Z6

868Z6

869Z6

870Z6

871Z6

872Z6

873Z6

874Z6

875Z6

876Z6

877Z6

878Z6

879Z6

880Z6

881Z6

882Z6

883Z6

884Z6

885Z6

886Z6

887Z6

888Z6

889Z6

890Z6

891Z6

892Z6

893Z6

894Z6

895Z6

896Z6

897Z6

898Z6

899Z6

900Z6

901Z6

902Z6

903Z6

904Z6

905Z6

906Z6

907Z6

908Z6

909Z6

910Z6

911Z6

912Z6

913Z6

914Z6

915Z6

916Z6

917Z6

918Z6

919Z6

920Z6

921Z6

922Z6

923Z6

924Z6

925Z6

926Z6

927Z6

928Z6

929Z6

930Z6

931Z6

932Z6

933Z6

934Z6

935Z6

936Z6

937Z6

938Z6

939Z6

940Z6

941Z6

942Z6

943Z6

944Z6

945Z6

946Z6

947Z6

948Z6

949Z6

950Z6

951Z6

952Z6

953Z6

954Z6

955Z6

956Z6

957Z6

958Z6

959Z6

960Z6

961Z6

962Z6

963Z6

964Z6

965Z6

966Z6

967Z6

968Z6

969Z6

970Z6

971Z6

972Z6

973Z6

974Z6

975Z6

976Z6

977Z6

978Z6

979Z6

980Z6

981Z6

982Z6

983Z6

984Z6

985Z6

986Z6

987Z6

988Z6

989Z6

990Z6

991Z6

992Z6

993Z6

994Z6

995Z6

996Z6

997Z6

998Z6

999Z6

1000Z6

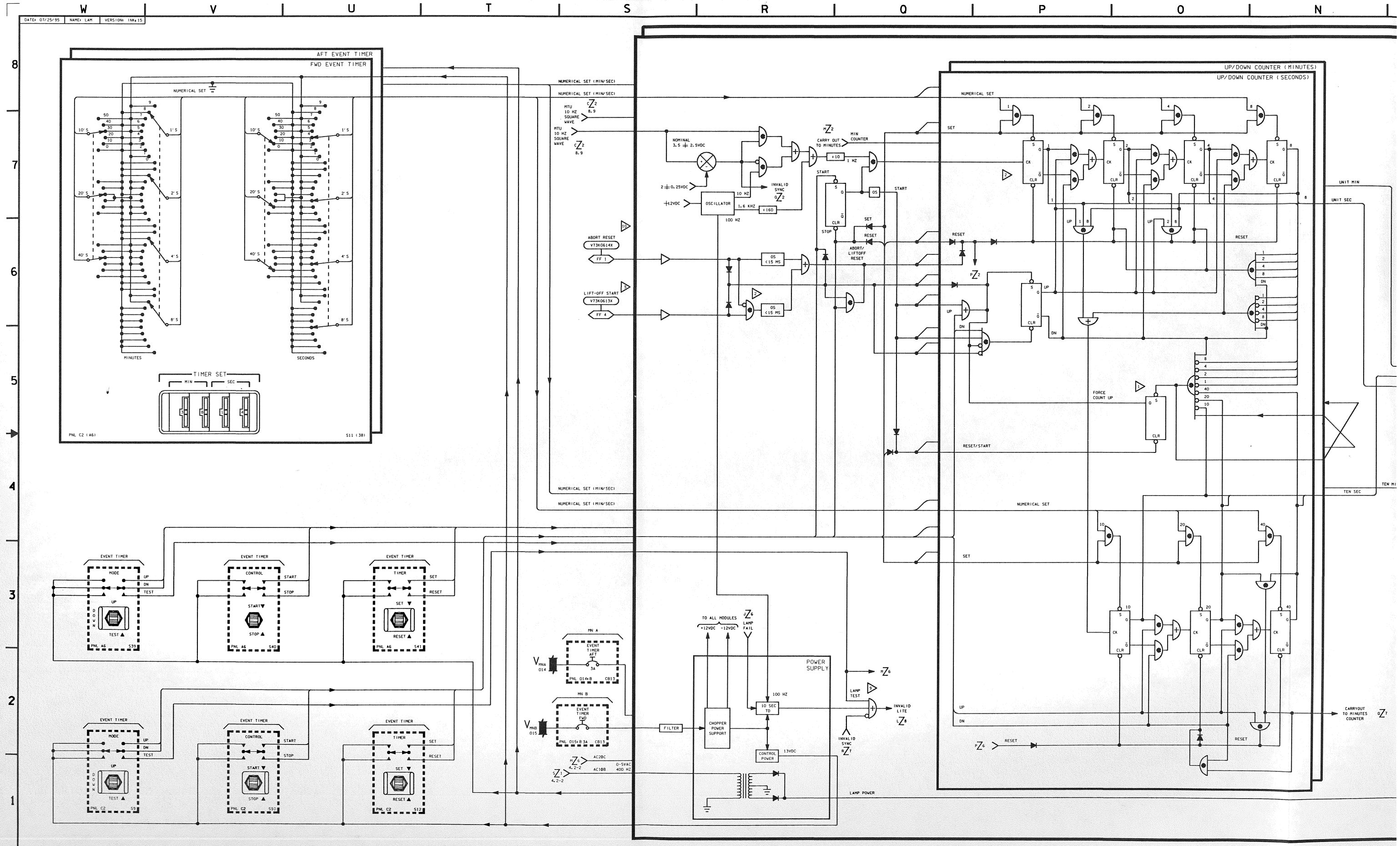

DATE: 07/25/95
NAME: LAM
VERSION: INK:15
AFT EVENT TIMER
FWD EVENT TIMER
NUMERICAL SET
MINUTES
SECONDS
TIMER SET
MIN
SEC
PNL C2 (A6)
S11 (38)
NUMERICAL SET (MIN/SEC)
MTU 10 HZ SQUARE WAVE
NOMINAL 3.5 ± 2.5VDC
2 ± 0.25VDC
+12VDC
OSCILLATOR
10 HZ
1.6 KHZ
100 HZ
INVALID SYNC
CARRY OUT TO MINUTES
MIN COUNTER
START
STOP
SET
RESET
ABORT/ LIFTOFF RESET
ABORT RESET
V73K0614X
FF 1
LIFT-OFF START
V73K0613X
FF 4
OS <15 MS
UP/DOWN COUNTER (MINUTES)
UP/DOWN COUNTER (SECONDS)
UNIT MIN
UNIT SEC
TEN SEC
FORCE COUNT UP
RESET/START
CARRYOUT TO MINUTES COUNTER
EVENT TIMER
MODE
CONTROL
TIMER
UP
DN
TEST
START
STOP
RESET
PNL A6
S39
S40
S41
PNL C2
S9
S10
S12
MN A
EVENT TIMER AFT
MN B
EVENT TIMER FWD
PNL 014:B
PNL 015:B 3A
CB13
AC20C
AC10B
0-5VAC 400 HZ
FILTER
TO ALL MODULES
+12VDC
-12VDC
LAMP FAIL
POWER SUPPLY
CHOPPER POWER SUPPORT
10 SEC TD
100 HZ
CONTROL POWER
13VDC
LAMP TEST
INVALID LITE
INVALID SYNC
LAMP POWER

BASIC REV E-6

BASIC REV E-2

DATE: 09/25/92 | NAME: VCM | VERSION: INA4

R Q P O N M L K J I H

GENERAL PURPOSE COMPUTER
MODE
IOP 1
55 RUN CMD DI 02
54 STBY CMD DI 01
BFC 1A
14 HALT CMD
RUN
HALT
STBY
PNL 06 S48
PAUSE

GENERAL PURPOSE COMPUTER
INITIAL PROGRAM LOAD
IOP 2
IPL CMD DJ 03
PNL 06 S41

IOP 2
SIGNAL REFERENCE GROUND

GENERAL PURPOSE COMPUTER
MODE
IOP 2
RUN CMD DI 02
IOP 2
STBY CMD DI 01
BFC 2A
16 HALT CMD
RUN
HALT
STBY
PNL 06 S47
PAUSE

GENERAL PURPOSE COMPUTER
OUTPUT
SELECT
BACKUP
NORMAL
TERMINATE
OFF
21
26
PNL 06 S36

V76 X4303E OF3 N/A OLD CPU 1 RPC C EVENT 1 S/S
V76 X4301E OF1 N/A OLD CPU 1 RPC A EVENT 1 S/S
V76 X4351E OF1 N/A PCA DPS GPC 1 RPC A ON EVENT 1 S/S
V76 X4302E OF2 N/A OLD CPU 1 RPC B EVENT 1 S/S
V76 X4352E OF2 N/A PCA DPS GPC 1 RPC B ON EVENT 1 S/S
V76 X4357E OF3 N/A PCA DPS GPC 2 RPC C ON EVENT 1 S/S
V76 X4307E OF3 N/A OLD CPU 2 RPC C EVENT 1 S/S
V76 X4306E OF2 N/A OLD CPU 2 RPC B EVENT 1 S/S
V76 X4356E OF2 N/A PCA DPS GPC 2 RPC B ON EVENT 1 S/S
V76 X4305E OF1 N/A OLD CPU 2 RPC A EVENT 1 S/S
V76 X4355E OF1 N/A PCA DPS GPC 2 RPC A ON EVENT 1 S/S

CPU 1
IOP 1
BFC 1A
CPU 2
IOP 2
BFC 2A
28 VDC
RTN
PWR
5A

FPCA-3
FPCA-1
FPCA-2

RPC C CPU 1
RPC C IOP 1
RPC A CPU 1
RPC A IOP 1
RPC B CPU 1
RPC B IOP 1
RPC C CPU 2
RPC B CPU 2
RPC B IOP 2
RPC A CPU 2
RPC A IOP 2
CONTROL LOGIC
C SENSOR

FLCA-3
FLCA-1
FLCA-2
HYBRID DRIVER
3A
LF1

V72 ST160E OF1 N/A GPC 1 SW SCAN BUS A EVENT 1 S/S
V72 ST164E OF2 N/A GPC 2 SW SCAN BUS B EVENT 1 S/S

V72K7189N GPC NO 1 BUS C INHIBIT CMD
V72K7190N GPC NO 1 BUS A INHIBIT CMD
V72K7191N GPC NO 1 BUS B INHIBIT CMD
V72K7192N GPC NO 2 BUS C INHIBIT CMD
V72K7193N GPC NO 2 BUS A INHIBIT CMD
V72K7194N GPC NO 2 BUS B INHIBIT CMD

GENERAL PURPOSE COMPUTER
POWER
ON
OFF
PNL 06 S31

V_{MNA} FPC 1
V_{MNB} FPC 2
V_{MNC} FPC 3
$V_{ESS\ 1BC}$ FD
$V_{ESS\ 2CA}$ FD
$V_{ESS\ 3AB}$ FD

DATE: 08/27/92	NAME: PSD	VERSION: BPT, 6
DATE: 09/09/92	NAME: JMB	VERSION: BPT, 7
DATE: 09/25/92	NAME: VEM	VERSION: INK, 4

TOGGLE SWITCH INTERNAL ASSEMBLY DRAWINGS

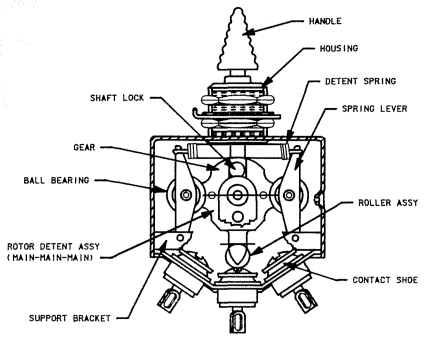

TOGGLE SWITCH ROTOR/ROLLER ASSEMBLY

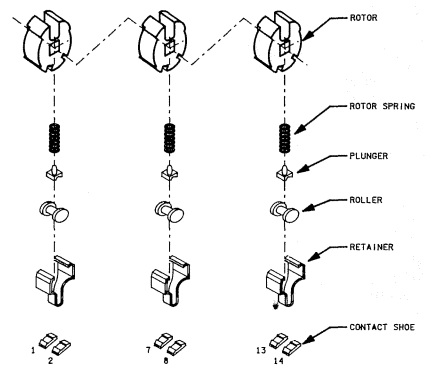

5 THE AP101S GPC'S USE THE OLD IOP POWER FEED. THE OLD CPU RPC'S ONLY SUPPLY POWER TO THE BFC

4 RTN AND PWR CAPPED OFF WITH NEW GPC'S

3 DISCRETE INPUT TRUTH TABLE:

TRUE	COMPLIMENT	OUTPUT
0	0	0
0	1	1
1	0	UNDEFINED
1	1	0

2 3 POLE, TOGGLE SWITCH, 18 CONTACT POSITIONS

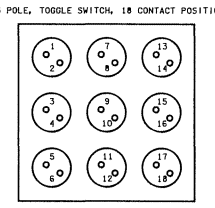

NOTES: 1 3 POLE, TOGGLE SWITCH, 12 CONTACT POSITIONS

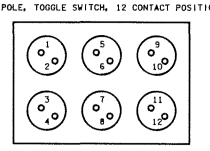

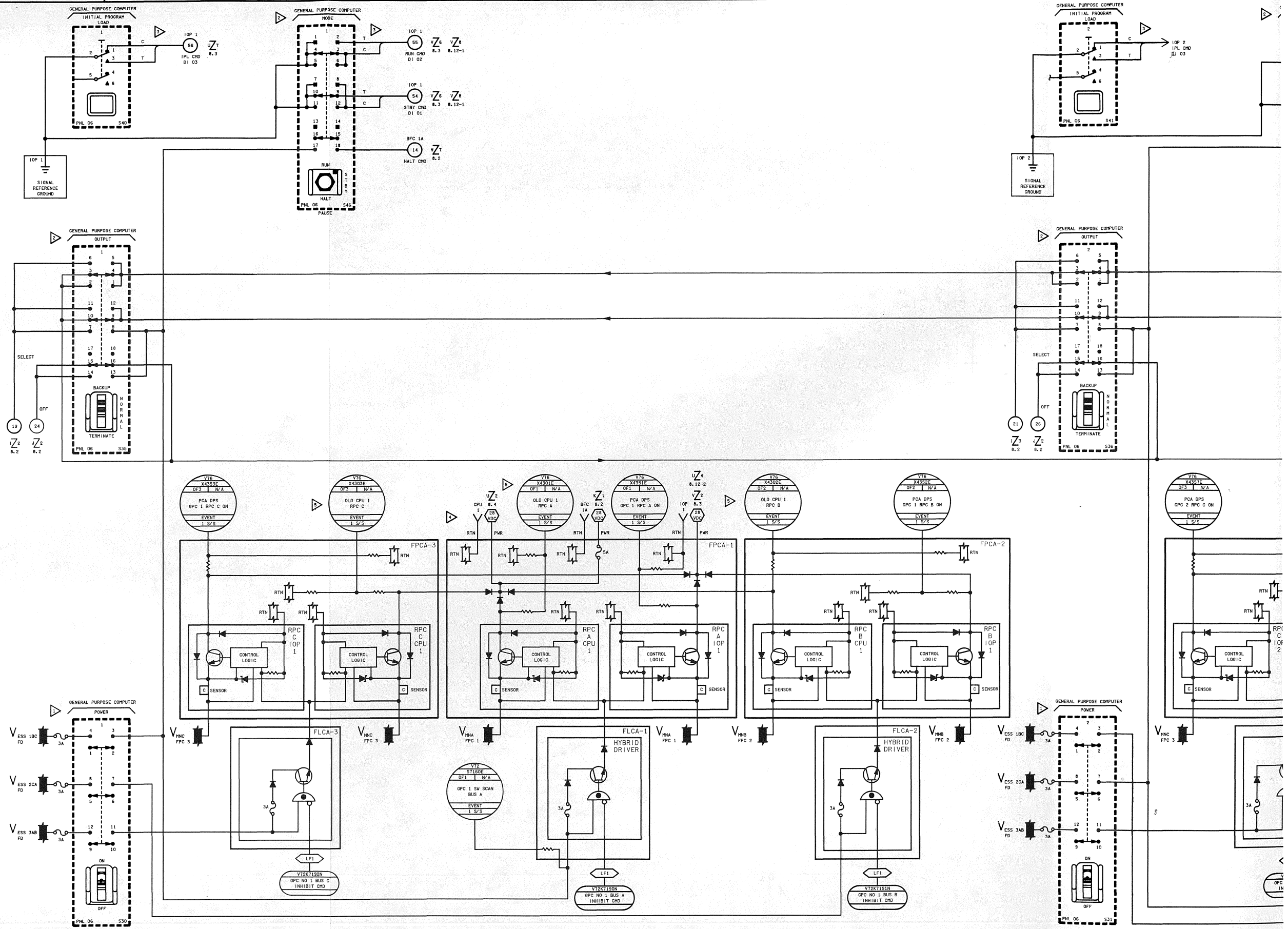

11 SW 1

NATIONAL AERONAUTICS AND SPACE ADMINISTRATION LYNDON B. JOHNSON SPACE CENTER HOUSTON, TEXAS		SIGNATURE	DATE
		DSGN THERESA M WISONG	3/27/87
PANEL 06 GPC SWITCHES		DR	
		ENGR ROBERT J. WALTON	8/24/90
		ENGR Robert J. Walton	10/9/92
		APP M. D. Erwin	10/9/92
DWG NO 8.11	SPACE SHUTTLE	APP	
	ALL	OMNIPLAN S.K. Kindred	10-13-92
SHEET 1 OF 2 PAGE	121 X 34	LTR E	PCN 2

BASIC REV E-2

DATE: 08/28/92	NAME: VEM	VERSION: BPT: 5
DATE: 09/09/92	NAME: JDF	VERSION: BPT: 6
DATE: 09/25/92	NAME: VEM	VERSION: INK: 4

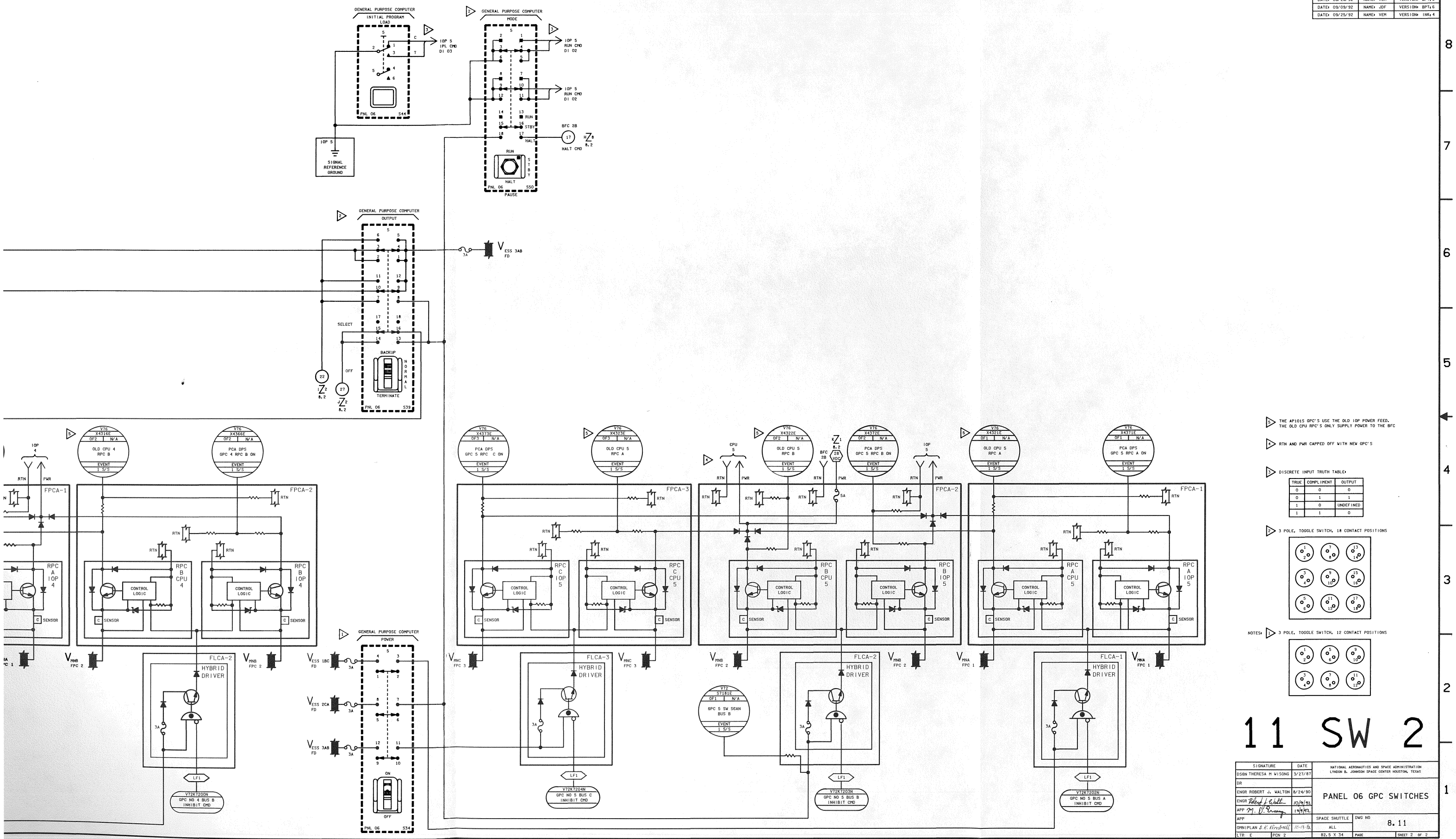

THE AP101S GPC'S USE THE OLD IOP POWER FEED. THE OLD CPU RPC'S ONLY SUPPLY POWER TO THE BFC

RTN AND PWR CAPPED OFF WITH NEW GPC'S

DISCRETE INPUT TRUTH TABLE:

TRUE	COMPLIMENT	OUTPUT
0	0	0
0	1	1
1	0	UNDEFINED
1	1	0

3 POLE, TOGGLE SWITCH, 1# CONTACT POSITIONS

NOTES: 3 POLE, TOGGLE SWITCH, 12 CONTACT POSITIONS

11 SW 2

SIGNATURE	DATE	NATIONAL AERONAUTICS AND SPACE ADMINISTRATION LYNDON B. JOHNSON SPACE CENTER HOUSTON, TEXAS
DSGN THERESA M WISONG	3/27/87	
DR		
ENGR ROBERT J. WALTON	8/24/90	PANEL 06 GPC SWITCHES
ENGR Robert J. Walton	10/9/92	
APP M. D. Young	10/9/92	
APP		SPACE SHUTTLE / DWG NO 8.11
OMNIPLAN S. A. Kimbrell 10-13-92		ALL
LTR E PCN 2		82.5 X 34 / PAGE / SHEET 2 OF 2

BASIC REV E-2

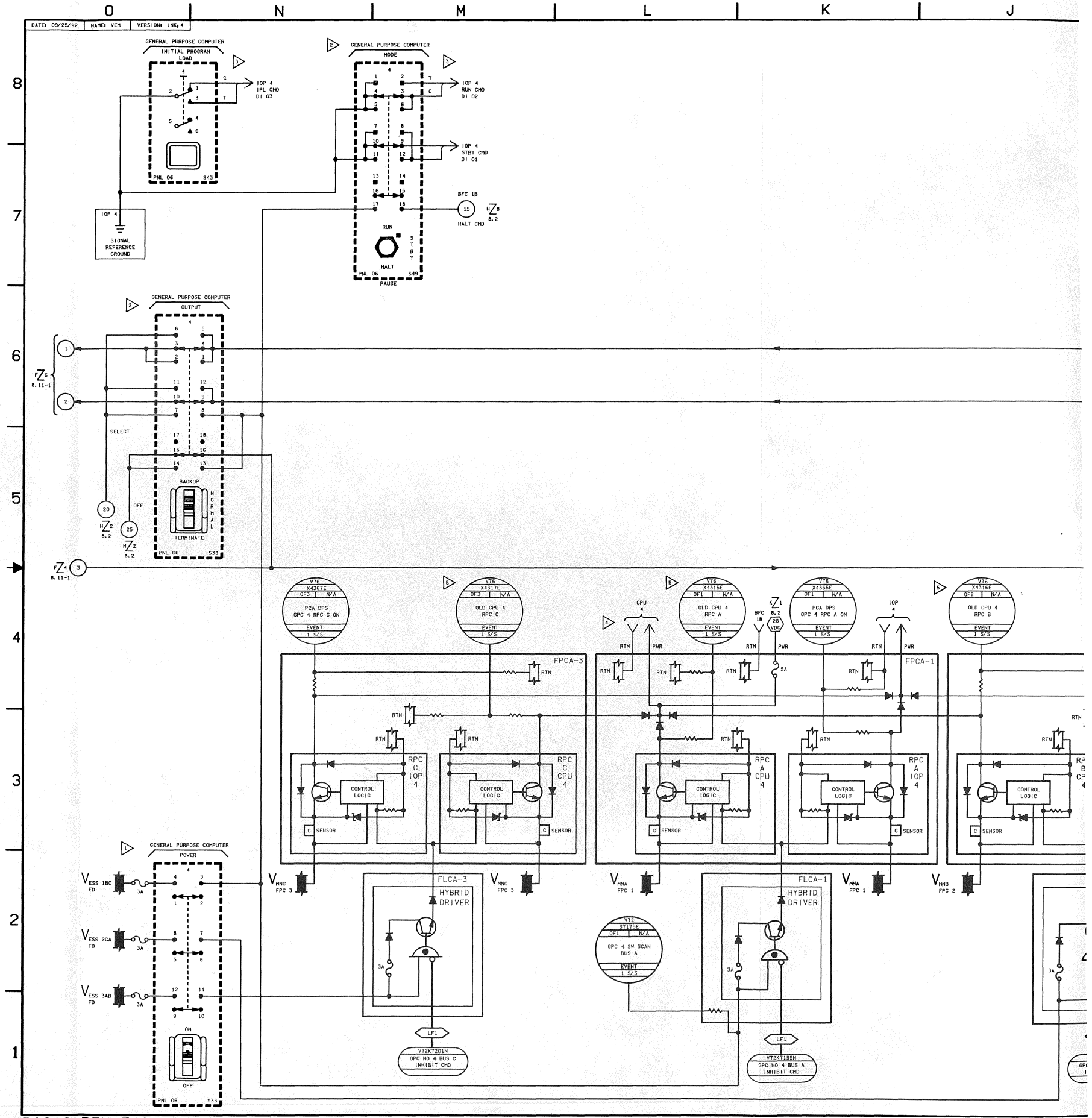
DATE: 08/25/92
NAME: VEH
VERSION: INK, 4
GENERAL PURPOSE COMPUTER
INITIAL PROGRAM LOAD
IOP 4 IPL CMD DI 03
PNL 06 S43
IOP 4 SIGNAL REFERENCE GROUND
GENERAL PURPOSE COMPUTER
MODE
IOP 4 RUN CMD DI 02
IOP 4 STBY CMD DI 01
BFC 1B HALT CMD
RUN
STBY
HALT
PAUSE
PNL 06 S49
GENERAL PURPOSE COMPUTER
OUTPUT
SELECT
BACKUP
NORMAL
OFF
TERMINATE
PNL 06 S38
GENERAL PURPOSE COMPUTER
POWER
ON
OFF
PNL 06 S33
PCA DPS GPC 4 RPC C ON
OLD CPU 4 RPC C
OLD CPU 4 RPC A
PCA DPS GPC 4 RPC A ON
OLD CPU 4 RPC B
GPC 4 SW SCAN BUS A
FPCA-3
FPCA-1
RPC C IOP 4
RPC C CPU 4
RPC A CPU 4
RPC A IOP 4
CONTROL LOGIC
SENSOR
FLCA-3
FLCA-1
HYBRID DRIVER
VT2K7201N GPC NO 4 BUS C INHIBIT CMD
VT2K7199N GPC NO 4 BUS A INHIBIT CMD
BASIC REV E-2

DATE: 07/15/94	NAME: JMB	VERSION INK: B
DATE: 08/11/95	NAME: SEW	VERSION BPT: J
DATE: 05/10/96	NAME: MDU	VERSION INK: 9

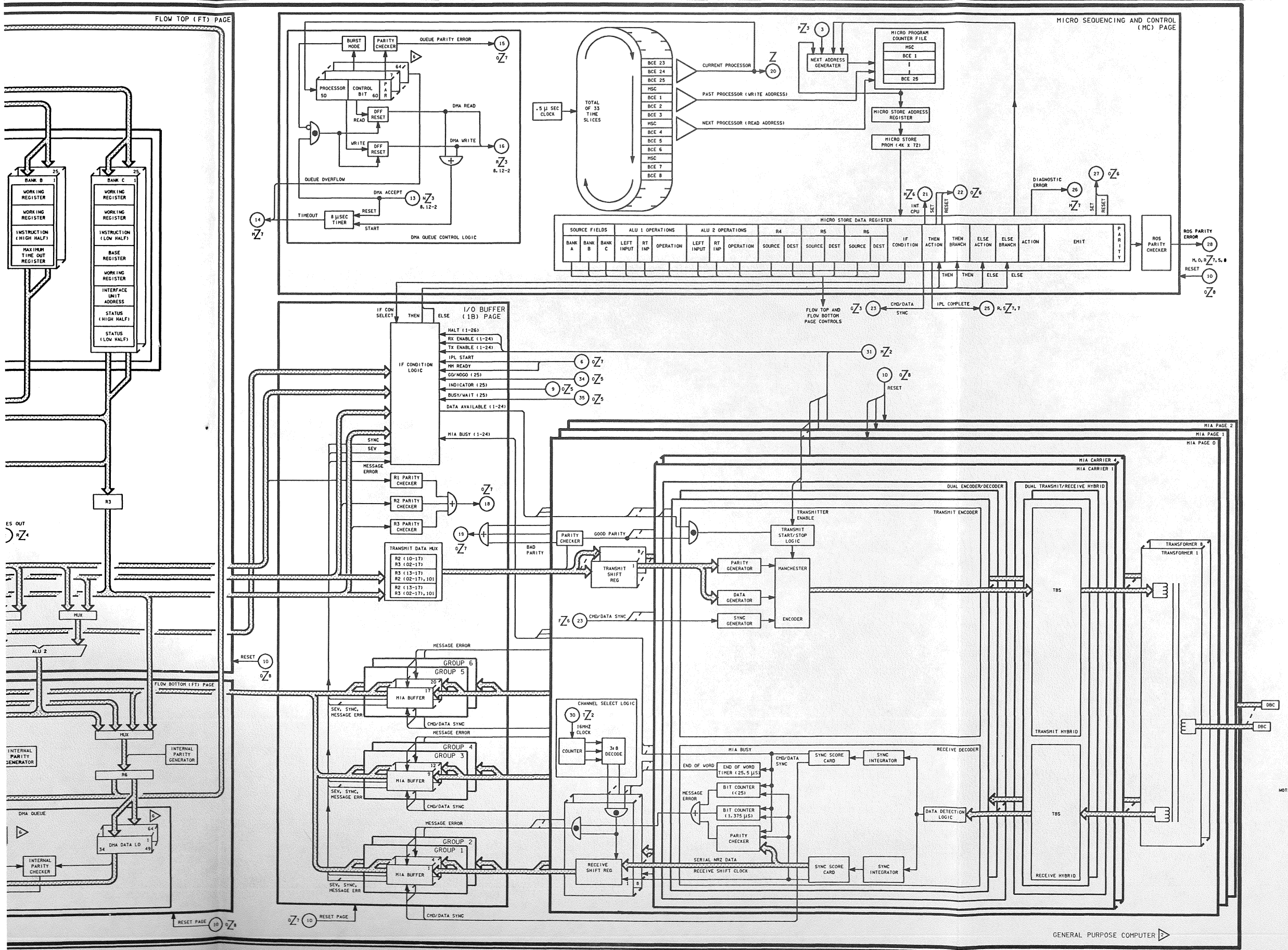

△14 THE S-R FLIP FLOP TRUTH TABLE IS AS FOLLOWS

S	R	Q
0	0	NO CHANGE
1	0	1
0	1	0
1	1	INDETERMINANT

△15 THE +5VDC MEM POWERS THE HALT DISCRETE AND THE SLEEP MODE LATCH SO THAT THEY REMAIN POWERED WHETHER THE GPC IS IN SLEEP MODE OR FULLY OPERATIONAL

△16 THE OUTPUTS OF THE LOGIC REFLECT ITS INPUTS. HOWEVER, THE OUTPUTS DO NOT CHANGE STATES UNLESS AT LEAST ONE INPUT TRANSITIONS FROM A '0' TO A '1'. AN INPUT TRANSITION FROM '1' TO '0' DOES NOT CAUSE A CHANGE IN THE OUTPUTS

△17 BCE MICRO PROGRAM CHECKS R2 BIT 0 PRIOR TO ALLOWING DATA TRANSMISSION TO THE MIA. IF IT IS A '0' THE DATA IS GATED TO THE MIA. IF IT IS '1' NO TRANSMISSION TAKES PLACE

△18 THE TEST FAIL VOTE 'REGISTER IS LOADED VIA THE PCO COMMAND 'LOAD TEST REGISTER'. USING THIS COMMAND IT IS POSSIBLE FOR SOFTWARE TO SET THE HARDWARE I-FAIL LIGHT

△19 POWER SUPPLY SLEEP MODE IS ENTERED APPROXIMATELY 4.5 MINUTES AFTER THE GPC IS HALTED AND NEITHER MMU IS SELECTED FOR IPL. POWER REQUIREMENTS DROP FROM 550 WATTS TO 50 WATTS WHEN SLEEP MODE IS ENTERED

△20 FOR INPUT ORIGINATION AND OUTPUT DESTINATION ASSIGNMENTS, SEE DRAWING 8.1

△1 ID SOURCE (DO 35) 5VDC IS STRAPPED BACK INTO STATION ID BITS 0, 1 AND 2 (DI 32, 33, 34) TO ESTABLISH THE GPC STATION ID'S. SEE DRAWING 8.1 NOTE 3

△2 ANY TWO FAIL VOTES INPUT TO THIS LOGIC WILL GENERATE A SIGNAL THAT SETS THE FAIL LATCH

△3 LEVEL B INTERRUPT REGISTER BITS 1-3 (DECODE 0, 1, 2) ARE DECODED BELOW

BIT			ERROR CONDITION
1	2	3	
0	0	0	NO ERROR
0	0	1	DEVICE OUT DATA ERROR
0	1	0	R1, R2, R3 PARITY ERROR
0	1	1	DMA ADDRESS/DATA PARITY ERROR
1	0	0	QUEUE CONTROL PARITY ERROR
1	0	1	MIA PARITY ERROR
1	1	0	BCE 25 ERROR
1	1	1	UNDEFINED

△4 DMA QUEUE IS CONTAINED ON TWO PAGES: FLOW BOTTOM PAGES HAS BITS 0-49. THE MICRO SEQUENCING AND CONTROL PAGE HAS BITS 50-61. PARITY IS CHECKED INDEPENDENTLY ON EACH PAGE. SEE PATTERN 011 AND 100 IN NOTE 9

△5 'OVER TEMP' 'CHARGER STAT' AND 'BATTERY STAT' ARE READ BY PCI INSTRUCTION AT 1.04 HZ. THEY DO NOT GENERATE A LEVEL E INTERRUPT

△6 MSC STATUS REGISTER

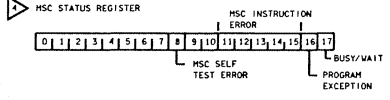

△7 BCE STATUS REGISTER (HI AND LO)

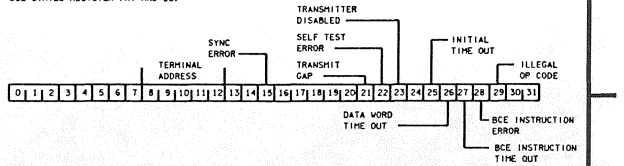

△8 1 OF 5. THE INTERFACES SHOWN REPRESENT GPC-1. GPC'S 2-5 ARE SIMILAR. FOR DETAILS SEE DRAWING 8.11

NOTES: △9 FOR DETAILS OF DISCRETE INPUT AND OUTPUT CIRCUITS SEE ROCKWELL DRAWING VS70-720229, ZONE C24

12 GPC 1

SIGNATURE	DATE	
DSGN V. ORTIZ	6/24/86	NATIONAL AERONAUTICS AND SPACE ADMINISTRATION LYNDON B. JOHNSON SPACE CENTER HOUSTON, TEXAS
DR		
ENGR M. BODEAU		GENERAL PURPOSE COMPUTER (I/O FUNCTIONS)
ENGR	5/16/96	
APP	5-16-96	
APP	5-16-96	SPACE SHUTTLE
CADS S. K. RAMBLER	6-17-96	ALL
LTR E	PCN 6	126.5 X 34

DWG NO 8.12

PAGE SHEET 1 OF 2

BASIC REV E-6

T | S | R | Q | P | O | N | M | L | K | J

FLOW TOP (FT

TOP LOCAL STORE

BANK A INPUT MUX | BANK B INPUT MUX | BANK C INPUT MUX

FORCE BANK B (0) TO 1

BANK A | BANK B | BANK C

WORK REGISTER | INSTRUCTION REGISTER | BASE REGISTER | INTERFACE UNIT ADDRESS | STATUS (HIGH HALF) | STATUS (LOW HALF)

INDEX | PROGRAM COUNTER | INSTRUCTION (HIGH HALF) | ACCUMULATOR (LOW HALF) | INSTRUCTION (LOW HALF) | PROGRAM COUNTER | BCE ID REGISTER | MAXIMUM TIME OUT REGISTER

ADDRESS NEXT | RESIDUAL WORD COUNT | DATA

MSC | BCE

ALU 1 | ALU 2

MUX

R1 | R2 | R3 | R4 | R5 | R6

INTERNAL PARITY GENERATION

FAIL VOTES OUT

PARITY ERROR | INTERNAL PARITY CHECKER

DMA QUEUE

D ADDRESS | DMA DATA HI | DMA DATA LO

PCI DATA MUX

FLOW BOTTOM (FT) PA

RESET PAGE

INTERFACE AND MIA CONTROL (1M) PAGE

DEVICE IN DATA BUS

CONTROL REGISTERS

TRANSMITTER ENABLE REGISTER | RECEIVER ENABLE REGISTER | HALT/ENABLE REGISTER | DISCRETE OUTPUT REGISTER

CONTROL MONITOR PCI MUX

ENABLE MIA 19 | ENABLE MIA 18 | ENABLE BCE 19 | ENABLE BCE 18 | HALT PROC

PCO MUX

DISABLE TX 1-24 | DISABLE TX 10-13 | DISABLE TX 14-17,20-23

PCI REGISTER

H BUS DATA DVR

H BUS ADDRS DVR

DEVICE OUT DATA BUS

IOP DATA REGISTER | DMA DATA REGISTER | PCO DATA REGISTER | PC I/O CONTROL REGISTER

FORCE ILLEGAL OP CODE | OPCODE | CONTROL | ENABLE PARITY CHECKERS | MASTER RESET

TRI STATE RCVR

INTERNAL PARITY GENERATOR

STAT MUX

BUSY/WAIT (STAT 4) REGISTER

GO/NOGO (STAT1) REGISTER

INDICATOR REGISTER

SET | RESET

LEVEL E INT

BATTERY STAT | CHARGER STAT | OVER TEMP | SPARE | SPARE | SPARE

LEVEL D INT

SPARE | SPARE | SPARE | SPARE

LEVEL C INT

MSC PROC INT 12 | MSC PROC INT 1 | INTERRUPT CPU

LEVEL B INT

DMA B TIMEOUT | D OVERFLOW | DECODE 2 | DECODE 1 | DECODE 0 | SPARE

LEVEL A INT

TIME OUT LATCH | VOTER FAIL LATCH | ROS PARITY ERROR | SET CH IDLE INT | IOP TIMING FAULT

DISABLE TX, HALT | FORCE BANK B (0) TO 1

ENABLE PARITY CHECKERS | MULTI BIT MEMORY ERROR

DEVICE OUT PARITY BUS

ENCODE/CONTROL LOGIC

DEVICE OUT DATA ERROR | QUEUE PARITY ERROR | DMA PARITY ERROR | DIAGNOSTIC ERROR | MIA PAGE PARITY ERROR | R1,R2,R3 PARITY ERROR

STATUS AND INTERRUPT (S1) PAGE

CONTROL MONITOR PM PCI MUX

LATCH E INH | LATCH D INH | LATCH C INH | LATCH B INH | LATCH A INH | MODE LATCHES

FAIL VOTES (1+1+1)

INHIBIT

R2 BIT 3 | R2 BIT 4 | R2 BIT 5 | R2 BIT 6 | FAIL VOTE OUT REGISTER

SELF FAIL

FAIL VOTE LOGIC

FAIL LATCH | TIME OUT LATCH | WATCH DOG TIMER | TIME OUT

FAIL VOTE 1 | FAIL VOTE 2 | FAIL VOTE 3 | FAIL VOTE 4

TEST FAIL VOTE REGISTER

SELF FAIL LOGIC

RESET LOGIC

RESET SI PAGE | RESET FB PAGE | RESET FT PAGE | RESET MIA PAGES | RESET MC PAGE | RESET IB PAGE | RESET IM PAGE | RESET AD PAGE

MASTER RESET | POWER ON RESET | ROS PARITY ERROR | TIMING STOPPED | IPL COMPLETE

MODE LATCH INPUTS/OUTPUTS TABLE

INPUTS: H S M N S | OUTPUTS: H S M S M

SIBY | RUN | HALT

IPL CONTROL LOGIC

IPL COMPLETE | IPL START | CLK OUT | ENABLE BCE 18 | ENABLE MIA 18 | ENABLE MIA 19 | ENABLE BCE 19 | SYSTEM RESET | HALT

PPWU 1 SEL IPL | PPWU 1 ROT | PPWU 2 ROT | PPWU 2 SEL IPL | PP READY

SLEEP MODE TIMER

4.48 MIN

SLEEP MODE LATCH

SLEEP

TIMING STOPPED

RESET PAGE

TO PAGES FOR TIMING

LLATOR

AND DISCRETE (AD) PAGE

AGE AND DISCRETE (AD) PAGE

STATUS AND I

INTERFACE AND MIA

SLEEP MODE DISCRETE INPUTS
00 HALT
01 SPARE
02 SPARE
03 SPARE

SLEEP MODE LATCH

+5 VDC MEM

SLEEP

DISCRETE INPUTS - NON RM
00 HALT
01 STBY
02 RUN
03 IPL CMD

4.48 MIN TIMER

SLEEP MODE TIMER

04 MMU SEL IPL
05 MMU SEL IPL
06 MMU 1 RDY
07 MMU 2 RDY

08 GPC X BFS RUN
09 GPC X BFS RUN
10 GPC X BFS RUN
11 GPC X BFS RUN

DISABLE TX 10-13
DISABLE TX 14-17, 20-23

12 SPARE (I/O TERM A)
13 I/O TERM B
14 SPARE
15 HISAM DUMP

16-19 SPARE

20 GPC X STBY
21 GPC X STBY
22 GPC X STBY
23 GPC X STBY

24 GPC X RUN
25 GPC X RUN
26 GPC X RUN
27 GPC X RUN

28 GPC X SYNC
29 GPC X SYNC
30 GPC X SYNC
31 GPC X SYNC

32 ID BIT 0
33 ID BIT 1
34 ID BIT 2
35 BFS ENGAGE 1

36 BFS ENGAGE 2
37 BFS ENGAGE 3
38 CRT SEL A
39 CRT SEL B

DISCRETE INPUTS - RM
40 FAIL VOTE 1
41 FAIL VOTE 2
42 FAIL VOTE 3
43 FAIL VOTE 4

DISCRETE OUTPUTS - RM
00 GPC 1 FAIL
07 GPC 2 FAIL
08 GPC 3 FAIL
09 GPC 4 FAIL
10 GPC 5 FAIL

SELF FAIL
FAIL VOTE 1
FAIL VOTE 2
FAIL VOTE 3
FAIL VOTE 4

DISCRETE OUTPUTS - NON RM
00-06 SPARE
07 I/O ACTIVE TB
08 SPARE
09 GPC READY TB
10 SPARE
11 SPARE
12 SPARE (MMU RESET)
13 SPARE (MMU RESET)
14-19 SPARE
20 GPC SELF SYNC 1
21 SPARE
22 BFS RUN
23 SPARE
24 GPC SELF SYNC 2
25-27 SPARE
28 GPC SELF SYNC 3
29 SPARE
30 GPC ID
31 IPL IN PROGRESS

IOP OSCILLATOR
32 MHZ OSC
÷ 8
÷ 2
TO PAGES FOR TIMING

'1'

RESET PAGE

TIMING STOPPED

RESET PAGE

MODE LATCH TRUTH TABLE

INPUTS			OUTPUTS		
H	S	R	H	S	R
1	1	1	1	1	1
1	1	0	1	1	0
1	0	1	1	0	1
1	0	0	1	0	0
0	1	1	0	1	1
0	1	0	0	1	0
0	0	1	0	0	1
0	0	0	0	0	0

HALT
STBY
RUN
IPL

RESET LOGIC
HALT
IPL COMPLETE
TIMING STOPPED
ROS PARITY ERROR
MASTER RESET
POWER ON RESET

RESET SI PAGE
RESET FB PAGE
RESET FT PAGE
RESET MIA PAGES
RESET MC PAGE
RESET IB PAGE
RESET IM PAGE
RESET AD PAGE

IPL CONTROL LOGIC
HALT
IPL COMPLETE
SYSTEM RESET
CLK OUT
ENABLE MIA 18
ENABLE BCE 18
IPL START
ENABLE MIA 19
ENABLE BCE 19
MM READY
MMU 1 SEL IPL
MMU 1 RDY
MMU 2 RDY
MMU 2 SEL IPL

SELF FAIL LOGIC
TEST FAIL VOTE REGISTER
FAIL VOTE 4
FAIL VOTE 3
FAIL VOTE 2
FAIL VOTE 1
WATCH DOG TIMER
TIME OUT
TIME OUT LATCH
FAIL VOTE LOGIC
FAIL LATCH
SELF FAIL

INHIBIT
FAIL VOTE OUT REGISTER
R2 BIT 3
R2 BIT 4
R2 BIT 5
R2 BIT 6

FAIL VOTES 1-4
PC (M=1) 2-29
MODE LATCHES
LEVEL A INT REG
LEVEL B INT REG
LEVEL C INT REG
LEVEL D INT REG
LEVEL E INT REG
CONTROL MONITOR RM PCI MUX

LEVEL A INT
TIME OUT LATCH
VOTER FAIL LATCH
SET CH IDLE INT
ROS PARITY ERROR
IOP TIMING FAULT

ENCODE/CONTROL LOGIC
R1, R2, R3 PARITY ERROR
MIA PAGE PARITY ERROR
DIAGNOSTIC ERROR
DMA PARITY ERROR
QUEUE PARITY ERROR
DEVICE OUT DATA ERROR

DEVICE OUT DATA BUS PARITY CHECKER
MULTI BIT MEMORY ERROR
ENABLE PARITY CHECKERS
FORCE ILLEGAL OP CODE
FORCE BANK B (0) TO 1
DISABLE TX, HALT

LEVEL B INT
SPARE
DECODE 0
DECODE 1
DECODE 2
Q OVERFLOW
DMA 8 µSEC TIMEOUT

LEVEL C INT
MSC PROG INT 1
MSC PROG INT 12
INTERRUPT C

LEVEL D INT
SPARE
SPARE
SPARE
SPARE

LEVEL E INT
SPARE
SPARE
SPARE
OVER TEMP
CHARGER STAT
BATTERY STAT

INDICATOR REGISTER
SET
RESET

GO/NOGO (STAT1) REGISTER

BUSY/WAIT (STAT 4) REGISTER

STAT MUX

INTERNAL PARITY GENERATOR
TRI STATE RCVR
DMA DATA REGISTER
PCO DATA REGISTER
PC I/O CONTROL REGISTER
CONTROL
IOP DATA REGISTER
DEVICE OUT DATA BUS
OPCODE
FORCE ILLEGAL OP CODE
MASTER RESET
ENABLE PARITY CHECKERS

CONTROL REGISTERS
DISCRETE OUTPUT REGISTER
HALT PROC
HALT/ENABLE REGISTER
ENABLE BCE 18
ENABLE BCE 19
RECEIVER ENABLE REGISTER
ENABLE MIA 18
ENABLE MIA 19
TRANSMITTER ENABLE REGISTER
DISABLE TX 1-24
DISABLE TX 10-13
DISABLE TX 14-17, 20-23

PCO MUX

H-BUS (DATA)
H-BUS (ADDRESS)

H BUS DATA DRVR
PCI REGISTER
H BUS ADDRS DRVR

DATE: 07/16/91	NAME: MDU	VERSION: INK 5
DATE: 08/26/91	NAME: MFB	VERSION: INK 6
DATE: 09/30/91	NAME: MFB	VERSION: INK 7

GENERAL PURPOSE COMPUTER

INTERRUPT PAGE (IP)

CENTRAL PROCESSING UNIT (CPU)

INSTRUCTION UNIT (IU)

EFFECTIVE ADDRESS UNIT (EA)

EXECUTION UNIT (EU)

CAPTURE REGISTER

POWER DOWN
POWER ON RESET
SYSTEM RESET
SPARE
CPU MICRO STORE PARITY FAULT
INTERRUPT PAGE PARITY ERROR
MEMORY PARITY /EDC
SPARE
INT DETECTED

SPARE
SPARE
ENDOP TIME OUT
SPARE
CPU CANNOT CONTINUE
RESTART PIPELINE
AGE MACRO STOP
CPU BREAK POINT
INT DETECTED

SPARE
SPARE
SPARE
SPARE
FIXED PT OVERFLOW
FLT PT OVERFLOW
SPARE
FLT PT UNDERFLOW
INT DETECTED

SPARE
ILLEGAL ADDRESS
SPARE
STORE PROTECT VIOLATION
BAD I/O COMMAND
DMA PARITY ERROR
IU MEMORY ERROR
EU MEMORY ERROR
INT DETECTED

SPARE
SPARE
SPARE
SPARE
SPARE
INTERVAL COUNTER A
INTERVAL COUNTER B
SPARE
INT DETECTED

IOP LEVEL A
IOP LEVEL B
IOP LEVEL C
IOP LEVEL D
IOP LEVEL E
SPARE
SPARE
SPARE
INT DETECTED

200 μ SEC ENDOP TIMER

ENDOP RESET

H-BUS RCVR

DATA IN REGISTER

COMMAND PLA

PARITY CHECKER

PARITY ERROR

TRANSLATOR MUX

I-BUS MUX

C-BUS

I-BUS

LOCAL STORE MUX

LOCAL STORE

BANK A (16 X 4)

BANK B (16 X 4)

MUX

ALU A

ALU B

OUTPUT LATCH

CPU INBUS DRVR

PRIORITY PLA

BRANCH ADDRESS MUX

SEQUENCER

SEQUENCER INSTR

BRANCH COND SEL

NEXT ADDRESS

INTERRUPT DETECTED

CONTROL STORE PROM

CONTROL STORE DATA REGISTER

SEQUENCER INSTRUCTION | SEQUENCER DESTINATION CONTROL | SHIFT —— CARRY | ALU SOURCE | ALU FUNCTION | INPUT MUX SELECT | B-FILE ADDRESS | A-FILE ADDRESS | CNTL GRP SEL | CNTL FUNC SEL | CYCLE TYPE | PAR

LITERAL FIELD | B-FILE ADDRESS

SEQUENCER DESTINATION CONTROL | I-BUS DEST

BRANCH MUX SELECT | BR CND SNS | BRANCH CONDITION SELECT | NEXT ADDRESS: BASE | COMMAND VECTOR

NEXT ADDRESS: BASE | PRIORITY VECTOR

NEXT ADDRESS

SEQUENCER INSTRUCTION | BRANCH MUX SELECT | BR CND SNS | BRANCH CONDITION SELECT | NEXT ADDRESS: BASE | I-BUS BITS | CNTL GRP SEL | CNTL FUNC SEL | CYCLE TYPE | PAR

PARITY ERROR

PARITY CHECKER

WAIT

FORCE ZERO

INSTRUCTION DECODE LOGIC

ADDRESS TYPE DECODE PLA

INSTR TYPE DECODE PLA

EFFECTIVE ADDRESS SEQUENCER

EFFECTIVE ADDRESS DATA FLOW CONTROL

CONTROLS

EA READ REG

EFFECTIVE ADDR PROG CNTR

EFFECTIVE ADDR A MUX

EFFECTIVE ADDR B MUX

EFFECTIVE ADDR ALU

EFFECTIVE ADDRESS A REG

ADDR DRVR

H-BUS DATA RCVR

ALIGNMENT MUX

BRANCH TAKEN

CONFLICT DETECTION LOGIC

CONFLICT DETECTED/RESTART PIPELINE

EXECUTION UNIT OPERATION FILE

MEMORY OPERAND FILE

INTERNAL OPERAND FILE

OPCODE ADDRESS

RIGHT LOCAL STORE MUX

LEFT LOCAL STORE MUX

RIGHT LOCAL STORE

LEFT LOCAL STORE

CPU SECTOR

CONSTANT SECTOR

GROUP 16

GROUP 1

REG 1

REG 16

FRACTION A REGISTER

FRACTION A1 MUX

FRACTION B1 MUX

FRACTION ALU

Y-MUX

Y-BUS DRVR

FRACTION D REGISTER

INTERNAL OUTBUS DRVR

FRACTION B REGISTER

FRACTION C REGISTER

EXECUTION UNIT PROGRAM CNTR

ADDR DRVR

H-BUS DATA DRVR

CPU MICRO CONTROL LOGIC

CONTROL STORE DATA REGISTER

STORE RESS TROLS | EXP PROM ADDR | LINK DR | SUBRTN CONTROL | SYNC CONTROL | MISCELLANEOUS FIELD: TYPE | STUB | STUB TYPE | EMIT FIELD | NEXT ROS ADDRESS | ROS BRANCH: TYPE | SPECIFICATION | TIMING SPEED | PARITY

PARITY CHECKER

ROS PARITY ERROR

CONTROL STORE ADDRESSING

NEXT ROS ADDRESS

FORCE ZERO

WAIT

ROSAR

GLKOUT

CONTROL STORE PROM

FLT PT UNDERFLOW
FIXED PT OVERFLOW
CPU CANNOT CONTINUE

CTION REGISTER CONTROL (24 X 32 EXPANSION PROM)

C STER | A REGISTER | LOCAL STORE WRITE CONTROL | LOCAL STORE MUX MODE | D REGISTER | CONST SECTOR REG | CPU SECTOR REG

EXPONENT FLOW CONTROL (24 X 32 EXPANSION PROM)

AB MUX SEL | ALU CONTROL | AI MUX SEL | BI MUX SEL | A REG | B REG | I REG | SHIFT | INCODE MODEL | AB MUX SEL | AI CNTL | BI CNTL | EXPONENT EMIT

▷ CHARGER STATUS AND BATTERY STATUS ARE NORMALLY ZERO. A CHARGE STATUS OF '1' INDICATES AN OPEN CIRCUIT SOMEWHERE IN THE CHARGING CIRCUIT. A BATTERY STATUS OF '1' INDICATES A SHORT CIRCUIT SOMEWHERE IN THE CHARGING CIRCUIT. THIS CIRCUIT IS DESIGNED TO DETECT BATTERY CELL FAILURES (OPEN OR SHORT)

▷ THE BBU LOW VOLTAGE SWITCH PREVENTS DAMAGE TO THE NICAD CELLS BY NOT ALLOWING DEEP DISCHARGE

▷ DELETED

▷ 1 OF 5. THE INTERFACES SHOWN REPRESENT GPC1. GPC'S 2-5 ARE SIMILAR. FOR DETAILS SEE DRAWING 8.11

▷ OVER TEMPERATURE SENSOR OUTPUT=1 WHEN TEMPERATURE >190° F

▷ EVERY 12.8 MICROSECONDS A SCRUB REQUEST IS GENERATED. WHEN SCRUB ENABLE IS RETURNED BY THE H-BUS ARBITER THE ERROR DETECTION AND CORRECTION (EDAC) CIRCUITS CHECK THE LOCATION IN MEMORY FOR ERRORS. IF A SINGLE BIT ERROR IS FOUND IT IS CORRECTED AND A SOFT ERROR IS LOGGED. IF MORE THAN ONE BIT IS IN ERROR NO ATTEMPT TO CORRECT THE ERROR IS MADE. A MULTIBIT ERROR WILL REMAIN HIDDEN UNTIL THAT LOCATION IS ACCESSED

▷ THE H-BUS ARBITER CONTROLS ALL H-BUS ACTIVITY. IT USES THE PRIORITIES SHOWN TO DETERMINE WHICH UNIT HAS ACCESS TO THE BUS

▷ PROGRAM COUNTER 1 IS COMPOSED OF INTERVAL COUNTER A AND MAIN STORE LOCATION $00B0_{16}$. PROGRAM COUNTER 2 IS COMPOSED OF INTERVAL COUNTER 2 AND MAIN STORE LOCATION $00B1_{16}$. INTERVAL COUNTERS A AND B ARE 16 BIT INCREMENTING COUNTERS. INTERRUPTS ARE GENERATED WHEN THE COUNTER ROLLS OVER TO 0000_{16}. HOWEVER, PROGRAMMER VISIBLE INTERRUPTS ARE GENERATED WHEN THE MAIN STORE LOCATION ASSOCIATED WITH THE INTERVAL COUNTER IS ALSO ZERO

NOTES: ▷ ERROR DETECTION AND CORRECTION CIRCUIT (EDAC) CAN DETECT AND CORRECT 1 BIT IN ERROR (SOFT ERROR). IT WILL DETECT 2 BITS IN ERROR (HARD ERROR). A HARD ERROR IS REPORTED TO THE MEMORY MANAGEMENT UNIT AND REPRESENTS A MEMORY LOCATION FAILURE

12 GPC 2

SIGNATURE		DATE	NATIONAL AERONAUTICS AND SPACE ADMINISTRATION LYNDON B. JOHNSON SPACE CENTER HOUSTON, TEXAS
DSGN			
DR B. J. TEDDER JR.		6/12/86	GENERAL PURPOSE COMPUTER (AP101-S)
ENGR B. F. JACKSON			
ENGR	Bruce F. Jackson	9/30/91	
APP	Mark B. Emmert	9/27/91	
APP			SPACE SHUTTLE
OMNIPLAN	S. K. Kimbrough	9-3-91	ALL
LTR E	PCN 1		121 X 34

DWG NO 8.12

PAGE SHEET 2 OF 2

BASIC REV E-1

POWER SUPPLY

+5 VOLT CONVERTER (MEMORY)
+5 VOLT CONVERTER
+5 VOLT CONVERTER
+5 VOLT CONVERTER
BIAS VOLTAGE CONVERTER
BIAS VOLTAGES
CONTROL LOGIC
+5 VDC MEM
+5 VDC
+12 VDC
-12 VDC
-5 VDC
15A
10A
20A
20A
CHANGE 1
CHANGE 2
SLEEP
POR
PO1 (MEM)
PO1 (CPU)

MEMORY MANAGEMENT UNIT - 2 (MMU2)

H - BUS ARBITER
PRIORITY REQUESTER
SCRUB
DMA WRITE
DMA READ
SOI R/W
XIO/ICW/IIO
EU READY FOR EA WRITE
EU WRITE
EA READ
EU READ
EA WRITE
EU READ ENABLE
EA READ ENABLE
IU READ
SPARE
IU READ ENABLE
IU WRITE
IU READ ENABLE
INTERRUPT REGISTERS
DMA PAR ERR
ILLEGAL ADDRS
STORE PROTECT
MEMORY PARITY/ECC
DMA MEMORY MULTI BIT ERROR
FAULT HOLDING REGISTERS
I/O REGISTER
EU REGISTER
EA OPERAND
IU REGISTER
FAULT DETECT LOGIC
IU MEMORY ERROR
EU MEMORY ERROR
HARD ERROR
SP ERROR
ADDRESS
MEMORY FAULT EXTENSION REG
ILLEGAL ADDRESS
STORE PROTECT
PMP
SOFT ERROR
HARD ERROR
ILLEGAL I/O
ERROR (I/O)
STORE PROTECT
PMP
SOFT ERROR
HARD ERROR
ILLEGAL I/O

CMOS MEMORY AND CONTROLS

MEMORY MANAGEMENT UNIT 1 (MMU1)

ADDRESS MUX
EVEN ADDRESS
ADDER
ODD ADDRESS
EVEN ADDRESS
EDAC ADDRESS REGISTER
ADDRESS EXPANSION LOGIC
MSB
EVEN ADDRESS
ODD ADDRESS
DSE RAM SET
GEN REG SET
DSE1
DSE4
BSV
DSA
DSB
DSC
DSD
SELECT LOGIC
BASE USED
BSR/OSR/OSV SEL.
H-BUS DRVR
H-BUS RCVR
ODD DATA MUX
EVEN DATA MUX
ODD DATA REGISTER
XIO CMD REGISTER
XIO DATA REGISTER
EVEN DATA REGISTER
SOFT ERROR COUNTER
TIMING TO PAGES
CONTROLS
CPU OSCILLATOR
40 MHZ OSC
÷ 2
÷ 2
TIMER A
INTERVAL TIMER A
INTERRUPT
TIMER B
INTERVAL TIMER B
INTERRUPT
SCRUB REQUEST
SCRUB LOGIC
DMA ACCEPT
TIMING AND CONTROL LOGIC
PO1 (MEM)
CHARGER STAT
BATTERY STAT
ELECTRONIC SWITCH
LEVEL DETECT 3.0 VOLTS
BATTERY 1
BATTERY BACKUP UNIT (BBU)

CMOS MEMORY PAGE 1
CMOS MEMORY PAGE 2
ODD MEMORY ADDRESSES
EVEN MEMORY ADDRESSES
CMOS MEMORY
ERROR CORRECTION CODE 128K X 3
ERROR DETECTION AND CORRECTION 128K X 16
ERROR DETECTION AND CORRECTION 128K X 6
ERROR CORRECTION CODE 128K X 6
SP ERROR
HARD ERROR
SOFT ERROR
EVEN ADDRESS REGISTER
H-BUS DRVR
H-BUS RCVR

INSTRUCTION UNIT (IU)

BRANCH TAKEN
CONFLICT DETECTION LOGIC
CONFLICT/REISTART PIPELINE
IU READ REQUEST
INSTRUCTION PROGRAM COUNTER
ADDR DRVR
SELECT A ● B + A ● C LOGIC
ALIGNMENT MUX
4 X 16 BITS
4 X 16 BITS
REGISTER SET A
REGISTER SET B
REGISTER SET C
H-BUS RCVR
0-15
16-32
EXPONENT REGISTER
EXPONENT ALU
EXPONENT A1 MUX
EXPONENT B1 MUX
EXPONENT REGISTER
EXPONENT REGISTER
EXPONENT AB MUX
EXPONENT REGISTER
FRACTION A REGISTER
FRACTION A1 MUX
ALU
FRACTION D REGISTER
Y-BUS DVER
Y-MUX
INTERN OUTBU DRVR
RIGHT LOCAL STO
LEFT LOCAL STO
CPU SECTOR
GROUP 16
GROUP 1
REG 16
REG 1
BRANCH TAKEN
XO1/ICW/110
EA WRITE (EU READ)
EA READ REQUEST
BSE/OSR - BSV/OSV SELECT
BASE USED
FRACTION FLOW CONTROL (16 X 32 EXPANSION PROM)
FRACTION REGISTER (16 X 32 EXPANSION PROM)
FRACTION ACU CNTL
FUNCTION MODE
CARRY IN
3 INPUT SELECT
Y-MUX CONTROL
EXP PROM ADDR
EXP PROM ADDR
EXP PROM ADDR
Y0DZRO
F / H
F A / B
F 1 LATCH
LOCAL STORE ADDRESS CONTROLS
EXP PROM ADDR
R MSW
L MSW
SCU-IBUS CONTROL
SCU-IBUS CONTROL
MISCELLANEOUS FIELD
TYPE
BYTE SIZE
UNIT FIELD
NEXT MOS ADDRESS
FRACTION REGISTER
FC REGISTER FILL
FA REG FILL
Y-MUX ENABLE
FC AUX CNTL
B REGISTER
C REGISTER
A REGISTER
D REGISTER
LOCAL STORE WRITE CONTROL
LOCAL STORE MUX MODE
CONST REGISTER
CPU SECTOR REG
AB MUX SEL

T | S | R | Q | P | O | N | M | L | K | J

DATE: 09/30/91 | NAME: MFB | VERSION: INK 7

V U T S R Q P O N

8 7 6 5 4 3 2 1

H-BUS (DATA)

H-BUS (ADDRESS)

↑Z3 28 8.12-1

↑Z2 24 8.12-1

POWER SUPPLY

OVER TEMP STATUS → 3 ↑Z5 8.12-1

20A → +5 VOLT CONVERTER

BIAS VOLTAGE CONVERTER

20A → +5 VOLT CONVERTER

CONTROL LOGIC

+5 VDC

15A → ±12 VOLT CONVERTER

+12 VDC

-12 VDC

0Z4 28 VDC → EMI FILTER

BIAS VOLTAGE CONVERTER

BIAS VOLTAGES

CONTROL LOGIC

10A → +5 VOLT CONVERTER (MEMORY)

+5 VDC MEM

+5 VDC MEM → 7Z8 8.12-1

POI (CPU) → 4 0Z7

POI (MEM) → 5 0Z3

POR → 6 0Z7 RZ7 8.12-1

SLEEP → 2 SZ8 8.12-1

CHARGE 2

CHARGE 1

CMOS MEMORY AND

MEMORY MANAG

UNIT 1 (MMU1

11 ↑Z3 → SOFT ERROR COUNTER

H-BUS RCVR

ADDRESS MUX → EDAC ADDRESS REGISTER

ADDER

ODD ADDRESS

EVEN ADDRESS

EVEN DATA MUX

ODD DATA MUX

ADDRESS EXPANSION LOGIC

ODD ADDRESS

EVEN ADDRESS

MSB

EVEN DATA REGISTER

XIO DATA REGISTER

XIO CMD REGISTER

ODD DATA REGISTER

BSV OSV BSR OSR

OSE RAM

GEN REG SET

GEN REG SET

DSE1

DSE4

INTERVAL TIMER A → TIMER A INTERRUPT

CONTROLS

SELECT LOGIC

BASE USED

BSR/DSR-BSV/DSV SEL

18 ↑Z2

CPU OSCILLATOR

40 MHZ OSC → ÷2 → ÷2

TIMING TO PAGES

INTERVAL TIMER B → TIMER B INTERRUPT

8 0Z4

H-BUS DRVR

MEMORY MANAGEMENT UNIT - 2 (MMU2)

9 0Z7 MEMORY PARITY/EDC

MEMORY FAULT EXTENSION REG

ILLEGAL ADDRESS

STORE PROTECT

MMP

SOFT ERROR

HARD ERROR

STORE PROTECT ERROR (I/O)

HARD ERROR

ILLEGAL I/O

FAULT HOLDING REGISTERS

IU REGISTER

EA OPERAND

EU REGISTER

I/O REGISTER

FAULT DETECT LOGIC

DMA MEMORY MULTI BIT ERROR → 21 PZ6 8.12-1

SP ERROR

HARD ERROR

ADDRESS

EU MEMORY ERROR

IU MEMORY ERROR

INTERRUPT DRIVERS

DMA PAR ERR

ILLEGAL ADDRS

STORE PROTECT → 10 0Z5

H - BUS ARBITER

PRIORITY	REQUESTER
1	SCRUB
2	DMA WRITE
3	DMA READ
4	SDI R/W
5	XIO/ICR/IIO
6	EU READY FOR EA WRITE
7	EU WRITE
8	EU READ
9	EA READ
10	SPARE
11	IU READ

HZ7 16 8.12-1

1Z1 16

1Z7 17

KZ6 15

EU WRITE ENABLE → 18 HZ2

EU READ ENABLE → 19 1HZ8.8

EA READ ENABLE

IU READ ENABLE → 20 1Z6

CMOS MEMORY PA

CMOS MEMORY PAGE

ODD MEMORY ADDRESSES

EVEN MEMORY ADDRESSES

EVEN ADDRESS REGISTER

H-BUS RCVR

ERROR CORRECTION CODE 128K X 3

ERROR DETECTION AND CORRECTION

CMOS MEMORY 128K X 16

ERROR DETECTION AND CORRECTION

ERROR CORRECTION CODE 128K X 6

SP ERROR

HARD ERROR

SOFT ERROR

RZ8 11

H-BUS DRVR

5 SZ4 POI (MEM)

SCRUB REQUEST

SCRUB ENABLE

SCRUB LOGIC

TIMING AND CONTROL LOGIC

DMA ACCEPT → 13 HZ7 8.12-1

BITE

BATTERY STAT

CHARGER STAT → 34 HZ5 8.12-1

ELECTRONIC SWITCH

LEVEL DETECT >3.0 VOLTS

BATTERY 1

BATTERY BACKUP UNIT (BBU)

BASIC REV E-1

ENHANCED MULTIPLEXER/DEMULTIPLEXER

SEQUENCE CONTROL UNIT (SCU) 2 (SECONDARY)
SEQUENCE CONTROL UNIT (SCU) 1 (PRIMARY)
A/D CONVERTER 2 (SECONDARY)
A/D CONVERTER 1 (PRIMARY)

CONTROL STORE MEMORY (512-WORD)
40-BIT MICRO-INSTRUCTION FIELD FORMAT
INSTRUCTION CONTROL DECODE
CONTROL STORE ADDRESSING LOGIC
BUS SELECT DECODE
SCU IN BUS MERGE
MEMORY CONTROL LOGIC
CHECK-BIT VERIFICATION
RESPONSE DATA WORD REQUEST FORMAT
COMAND DATA WORD TRANSFER FORMAT
DIGITAL RESPONSE DATA WORD FORMAT
REG FILE SELECT DECODE
BSR READ/LOAD SELECT LOGIC
SCU OUT BUS MERGE
SCU IN BUS MULTIPLEXER
IOM SELECT LOGIC
IOM REPLY MULTIPLEXER
MDM SYSTEM CLOCK
SEQ MUX SELECT DECODE
SEQ MUX
SEQUENCE PARITY CHECK LOGIC
SEQUENCE PROM FORMAT
CONDITION SET DECODE
BITE STATUS REGISTER LOGIC
A/D SELECT DECODE 8-CHAN DIFF MUX
IOM 15 (7)
IOM 0
INPUT/OUTPUT MODULES
EMDM/IOM CONFIGURATION

BUS SELECT DECODE

BUS SELECT		
BS$_8$	MNEM	NAME
0	RV	RCV DATA
1	SP	SEQ PROM
2	BSR	BSR STATUS
3	WA	WIRED ADRS
4	LC	LOWER CNTR
5	UC	UPPER CNTR
6	RF	REG FILE
7	0	ZEROS

SCU IN BUS MERGE

SCU IN BUS MERGE		
IB$_8$	MNEM	NAME
0	IB	IOM DATA
1	A/D	A/D DATA
2	SD	SCU DATA
3	VB	V-BIT
4	EB	E-BIT
5	1	LOGIC 1
6	0	LOGIC 0
7	SB	S-BIT

CHECK-BIT VERIFICATION

RESPONSE WORD TYPE	CHECK BIT PATTERN: INTERNAL ERROR SET	CHECK BIT PATTERN: E-BIT SET
SERIAL I/O	00, 11	10, 11
ALL OTHERS	00, 10, 11	

REG FILE SELECT DECODE

REG$_8$	MNEM	NAME
0	MDE	MODE FIELD
1	CHL	CHANNEL ADRS
2	IOM	I/O MODULE ADRS
3	WDS	NO. WORDS
4	INS	NO. INSTRUCTIONS
5	SAU	SEQ ADRS UPPER
6	SAL	SEQ ADRS LOWER
7	BTF	BITE TEST FIELD

BIT SELECT DECODE

BIT SELECT DECODE	
REG$_8$	NAME
0	BITS 1-4
1	BITS 5-8
2	BITS 9-11
3	SET S-BIT

SCU OUT BUS MERGE

OB$_8$	MNEM	NAME
0	1	LOGIC 1
1	B4	BIT 4
2	B3	BIT 3
3	B2	BIT 2
4	B1	BIT 1
5	B0	BIT 0
6	0	LOGIC 0
7		NOT USED

SEQ MUX SELECT DECODE

REG$_8$	HALF-WORD BITS
0	SAL BITS 1-3*
1	SAL BITS 4-8
2	SAU BITS 9-12*
3	SAU BITS 13-16

*MODIFIED VIA MUX LOGIC

A/D SELECT DECODE 8-CHAN DIFF MUX

TC$_8$	FUNCTION
0, 4, 7	IOM SELECT
2	BITE RTN WD1 (BITE -FS)
6	BITE RTN WD2 (BITE -REF)
1	BITE RTN WD3 (BITE NULL)
5	BITE RTN WD4 (BITE +REF)
3	BITE RTN WD5 (BITE +FS)

CONDITION SET DECODE

SET CONDITION		
CND$_{16}$	MNEM	NAME
00	IDE	INCOMING DATA ERROR
01	NEC	NONEXISTENT CHAN CHECK ENABLE
02	NTI	NOT ABLE TO TRANSFER DATA CHECK ENABLE
03	TMW	TOO MANY WORDS
04	IMD	ILLEGAL MODE
05	IER	INTERNAL ERROR
06	GTE	GAP TIME ERROR
07	SBC	SUCCESSFUL BITE COMPLETION
10	LCN	LAST COMMAND NOT COMPLETED
11	SSL	SERIAL SELECTED
12	TLD	TIMER LOAD
13	ACS	ADDRESS CHECK STROBE
14	EOM	END OF MESSAGE
15	BSL	BSR REGISTER LOAD
16	SOP	SEQUENCE PARITY CAPTURE
17		NOT USED
20	BUL	BUS REGISTER LOAD
21	SOS	SCU OUT SELECT
22	SIS	SCU IN SELECT
23	RLD	REPLY LOAD (IOM REPLY REGISTER)
24	IRS	IOM RESET
25	ATL	A/D TEST CODE LOAD
26	AAL	A/D ADDRESS LOAD
27	CLV	CLEAR V-BIT RESET (i.E., SET V-BIT)
30	CPL	COUNTER PARALLEL ENABLE-LOWER
31	CPU	COUNTER PARALLEL ENABLE-UPPER
32	SPB	SET P/S BITE
33	RPB	RESET P/S BITE
34-37		NOT USED (37 MAY BE CALLED 'NO OP')

BITE STATUS REGISTER LOGIC

BIT	NAME
1	POWER INTERRUPT
2	INCOMING DATA ERROR
3	OPERATION REQUESTED ON A NONEXISTENT CHANNEL
4	NO INDICATED TRANSFER OF DATA TO/FROM IOM
5	TOO MANY WORDS IN LAST MESSAGE
6	LAST COMMAND NOT COMPLETED
7	SIMULTANEOUS EXECUTION ON PRI AND SEC DATA BUS
8	ILLEGAL MODE COMMAND
9	INTERNAL ERROR DETECTED
10	GAP TIME ERROR
11	SUCCESSFUL BITE COMPLETION
BITS 12-16 ARE LOCATED IN THE REGISTER FILE	

EMDM/IOM CONFIGURATION

EMDM	0	1	2	3	4	5	6	7	8	9	10	11	12	13	14	15
FF 1-FF 3	TAC	AID	DOH	SIO	DIH	DOL	DIL	AIS	AOD	DIH	DOH	SIO	DIH	DOL	AID	DIL
FF 4	TAC+	AIDX	DOH	SIO+	DIH	DOL	DIL	AIS	AOD	DIH	DOH	SIO	DIH	DOL	AID	DIL
FA 1-FA 4	AOD	AID	DOL	DIH	AOD	DIL	AIS	DOH	DIH	AID	DOL	DIH	DOH	DILM	AIS	DOH
LF 1	DOH	DILM	DOH	AISM	AOD	DOH	DIH	DOL	DOL	DOH	DIH	DOH	AIDM	DIHM	DOH	DILM
LA 1	DOH	DILM	DOH	AISM	AOD	DOH	DIHM	DOLM	DOLM	DOH	DIHM	DOH	AIDM	DIHM	DOH	DILM
LM 1	DOH	DILM	DOH	AISM	AOD	DOH	DIH	DOL	DOL	DOH	DIH	DOH	AIDM	DIHM	DOH	DILM
PF 1	DOL	AID	DOH	DIH	AIDX	DIL	DIH	DOH	SIO	DIH	DOL	AID	AODM	DIL	DOH	SIOM
PF 2	DOL	AID	DOH	DIH	AIDX	DIL	DIH	DOH	SIO	DIH	DOL	AID	AOD	DIL	DOH	SIOM
FLX 1																
FLX 2																
LL 1,LL 2	DOL	DIL	DIH	AID	DOL	DIL	DIH	AID								
LR 1,LR 2	DOL	DIL	DIH	AID	DOL	DIL	DIH	AID								
OF 1	SIO	AIS	DIL	AIS	DIH	AIS	DIH	AIS	AIDM	AIS	DIL	AIS	DIH	AIS	DIH	AIS
OF 2	SIO	AIS	DIL	AIS	DIH	AIS	DIH	AIS	AID	AIS	DIL	AIS	DIH	AIS	DIH	AIS
OF 3	SIOM	AIS	DIL	AIS	DIH	AIS	DIH	AIS	AIDM	AIS	DIL	AIS	DIH	AIS	DIH	AIS
OF 4	DIL	AIS	DIH	DIL	DIH	AIS	DIH	DILM	AIS	DIL	AIS	DIH	AIS	DIH	AIS	DIH
OA 1-OA 3	AIS	DIH	AIS	DIL	AIS	DIH	AIS	DIH	DILM	AIS	DIH	AIS	DIH	AIS	DIL	AIS

+AND X DUMMY IOM'S USED IN GPC I/O TRANSACTIONS (←=OUTPUT/ → INPUT)
■ IOM'S PRESENT BUT NOT USED

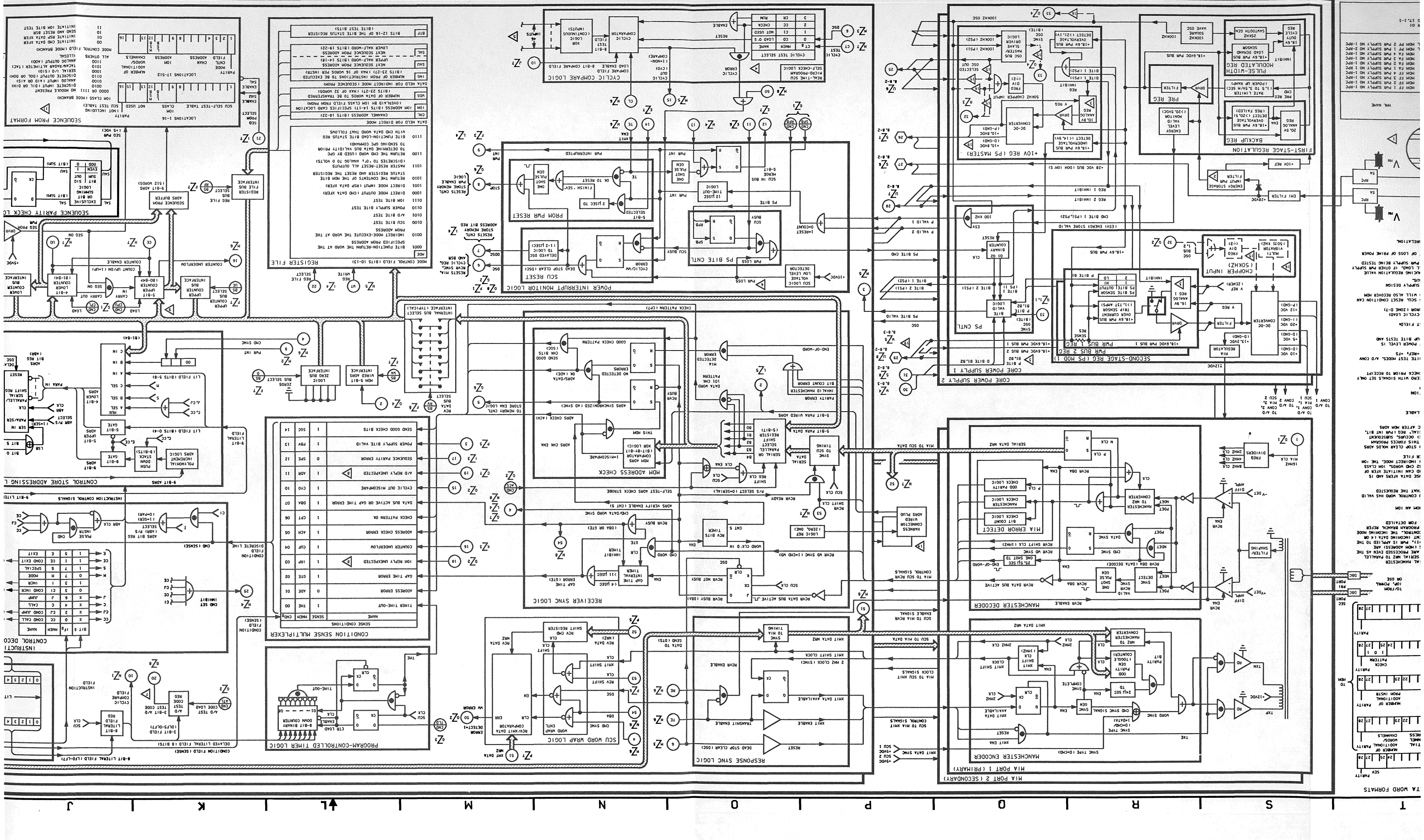
CORE POWER SUPPLY 2
SECONDARY-STAGE REG (PS MOD 1)
PWR BUS 2 REG
PWR BUS 1 REG
FIRST-STAGE REGULATION
BACKUP REG
PULSE-WIDTH MODULATED REG
PRE REG
CHOPPER INPUT (50KHZ)
DC-DC CONVERTER
+10V REG (PS MASTER)
PS CNTL
MIA PORT 2 (SECONDARY)
MIA PORT 1 (PRIMARY)
MANCHESTER ENCODER
MANCHESTER DECODER
MIA ERROR DETECT
RESPONSE SYNC LOGIC
RECEIVER SYNC LOGIC
SCU WORD WRAP LOGIC
MDM ADDRESS CHECK
PROGRAM-CONTROLLED TIMER LOGIC
CONDITION SENSE MULTIPLEXER
REGISTER FILE
SEQUENCE FROM FORMAT
SEQUENCE PARITY CHECK LOGIC
INSTRUCTION CONTROL DECODE
CONTROL STORE ADDRESSING
CYCLIC COMPARE LOGIC
POWER INTERRUPT MONITOR LOGIC
SCU RESET
PS BITE CNTL
CHECK PATTERN (CPT)
INTERNAL BUS SELECT
INTERFACE
MDM 5-BIT WIRED ADRS
ZEROS BUS SELECT
LOGIC ZERO
SEND GOOD CHK BITS
SEND SUPPLY BITE VALID
SEND SEQUENCE PARITY ERROR
SEND A/D REPLY UNEXPECTED
SEND CYCLIC OUT MISCOMPARE
SEND DATA BUS ACTIVE OR GAP TIME ERROR
SEND CHECK PATTERN OK
SEND ADDRESS CHECK ERROR
SEND COUNTER OVERFLOW
SEND 10H REPLY UNEXPECTED
SEND GAP TIME ERROR
SEND ADDRESS ERROR
SEND TIMER TIME-OUT
SENSE CONDITIONS
CONDITION SENSE FIELD (CSENSE)
DELAYED LITERAL FIELD (LF0-LF7)
8-BIT LITERAL FIELD (LF0-LF7)
INSTRUCTION FIELD
CONDITION FIELD (CSENSE)
INSTRUCTION CONTROL SIGNALS
9-BIT LITERAL FIELD
9-BIT ADRS
LITERAL FIELD
CONDITION FIELD
INSTRUCTION FIELD
SEQUENCE ADRS BUFFER
SEQUENCE PROM ADRS BUFFER
REG FILE ADDRESS BUS SELECT
REGISTER FILE BUS INTERFACE
REG FILE WRITE
REG FILE SELECT
REG FILE READ
SCU SELF-TEST TABLE
SCU TEST TABLE
SEQUENCE PROM ADDRESS SELECT
SEQ PROM DRVR
SEQ PROM ENABLE
SEQ ON
SEQ PROM
SEQUENCE PROM FORMAT
LOCATIONS 1-16
LOCATIONS 17-512
PARITY FIELD
NOT USED
CLASS
ADDRESS
CHANNELS
NUMBER OF ALL OTHERS
ADDITIONAL
DISCRETE OUTPUT (COL OR DOH)
DISCRETE INPUT (COL OR DIH)
SERIAL I/O (SIO)
ANALOG INPUT (AIO OR AIS)
ANALOG OUTPUT (AOO)
TACAN/ADAR ALTIMETER (TAC)
SCU SELF-TEST TABLE
SCU TEST TABLE
SEQUENCE PROM FORMAT
SEQUENCE PARITY CHECK LOGIC
INSTRUCTION CONTROL DECODE
CONTROL STORE ADDRESSING
CYCLIC COMPARE LOGIC
POWER INTERRUPT MONITOR LOGIC
SCU RESET
PS BITE CNTL
CHECK PATTERN (CPT)
INTERNAL BUS SELECT
INTERFACE
MDM 5-BIT WIRED ADRS
ZEROS BUS SELECT
LOGIC ZERO
SEND GOOD CHK BITS
SEND SUPPLY BITE VALID
SEND SEQUENCE PARITY ERROR
SEND A/D REPLY UNEXPECTED
SEND CYCLIC OUT MISCOMPARE
SEND DATA BUS ACTIVE OR GAP TIME ERROR
SEND CHECK PATTERN OK
SEND ADDRESS CHECK ERROR
SEND COUNTER OVERFLOW
SEND 10H REPLY UNEXPECTED
SEND GAP TIME ERROR
SEND ADDRESS ERROR
SEND TIMER TIME-OUT
SENSE CONDITIONS
CONDITION SENSE MULTIPLEXER
REGISTER FILE
SEQUENCE F

DATE: 07/13/95	NAME: BJB	VERSION: BPT.6
DATE: 07/26/95	NAME: LAM	VERSION: BPT.T
DATE: 05/10/96	NAME: MDU	VERSION: INK.3

1. SRB MDM'S NO LONGER CROSS-STRAP REDUNDANT +18.6VDC POWER BUSES INFLIGHT. ISOLATION IS MAINTAINED VIA ELECTRONIC SWITCHES (REFER TO DWG 8.8 SHEET 3, ZONE V-5 FOR DETAILS). SRB MDM'S DO NOT UTILIZE CORE PWR SUPPLY +10VDC REGULATOR LOGIC (PS MASTER HYBRID)

2. THE FOLLOWING LOGIC REPRESENTATION SUMMARIZES THE HARDWARE AND SOFTWARE LOGIC BEHIND THE BITS IN THE BITE STATUS REGISTER, AND THE ACTION TAKEN

BITE STATUS REGISTER (BSR) HARDWARE/SOFTWARE LOGIC SUMMARY

BIT 1 POWER INTERRUPT (PWR INT) — ACTION: ALL ANALOG AND DISCRETE OUTPUT CHANNELS ARE ABOUT TO BE RESET TO ZERO VDC

BIT SET DURING PWR-UP OR PWR-DOWN (REFER TO ZONE M,N-3 FOR DETAILED LOGIC) EACH SCU WILL SIMULTANEOUSLY DETECT PWR INT AND SET ITS OWN BSR

BIT 2 INCOMING DATA ERROR (IDE) — HARDWARE | SOFTWARE

ACTION: CMD WD/CMD DATA WD PROCESSING IS TERMINATED (SUBSEQUENT INCOMING DATA WORDS OF SAME MESSAGE ARE DISCARDED)

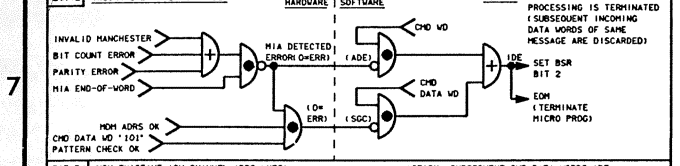

BIT 3 NON-EXISTANT IOM CHANNEL ADRS (NEC) — ACTION: SUBSEQUENT CMD DATA WORDS ARE ACCEPTED IF CORRECT. ANY INCORRECT RESPONSE DATA WORD IS FLAGGED TO THE GPC VIA CLEARED V-BIT

BIT SET WHEN IOM CHANNEL ADRS NOT VALID FOR SELECTED IOM ADRS (THAT IS, NO IOM REPLY AT "NEC" CHECK TIME)-REFER TO ZONE F-1 FOR DETAILS)

BIT 4 UNABLE TO TRANSFER DATA TO/FROM IOM, OR DATA TRANSFER INCOMPLETE (NTI) — ACTION: PROCESSING CONTINUES (V-BIT IS CLEARED FOR RESPONSE DATA WD THAT ENCOUNTED THE PROBLEM, SUBSEQUENT DATA WDS NOT AFFECTED)

BIT SET WHEN IOM REPLY (IRP) OR A/D REPLY (ADR) INDICATES FAILURE TO COMPLETE DATA TRANSFER (REFER TO ZONE F-1 FOR DETAILS)

BIT 5 TOO MANY WORDS IN LAST MESSAGE (TMW) — ACTION: CMD DATA WD PROCESSING IS TERMINATED (THAT IS, CMD DATA WD IS IGNORED)

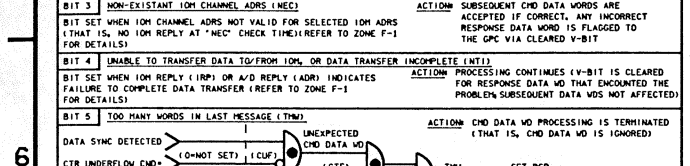

BIT 6 LAST CMD NOT COMPLETED (LCN) — ACTION: NEW CMD WORD IS ACCEPTED

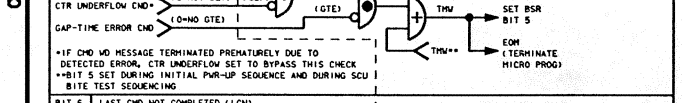

BIT 7 SIMULTANEOUS OPERATION OF BOTH SCU'S (SIMOP) — ACTION: CAUSES IMMEDIATE HALT OF PROCESSING FOR BOTH PRI AND SEC SCU'S. EITHER SCU WILL CONTINUE UPON RECEIPT OF A NEW CMD WORD

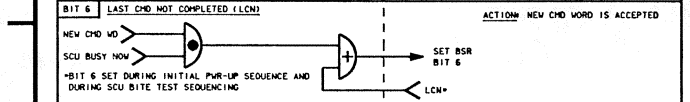

BIT 8 ILLEGAL MODE BRANCH COMMANDED (IMD) — ACTION: CMD WD/CMD DATA WD PROCESSING IS TERMINATED

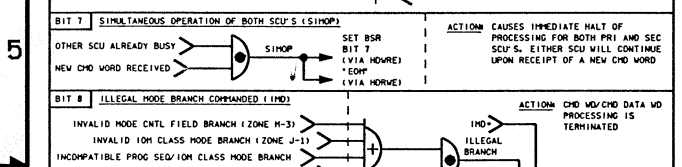

BIT 9 INTERNAL ERROR DETECTED (IER) — ACTION: PROCESSING IS TERMINATED (IF TRANSMITTING A RSP DATA WD, TRANSMISSION IS COMPLETED WITH THE SEV W-BIT CLEARED, THEN THE PROCESSING IS TERMINATED)

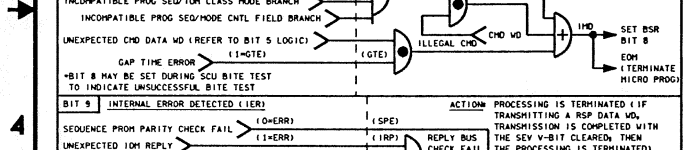

BIT 10 INCOMING (MIA) WORD GAP INTERNAL ERROR (GTE) — ACTION: PROCESSING IS TERMINATED (REMAINING INCOMING CMD DATA WDS ARE IGNORED) NEW CMD WORDS ARE ACCEPTED

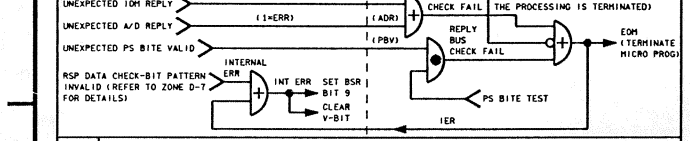

BIT 11 SUCCESSFUL BITE TEST COMPLETION (SBC) — ACTION: NO ACTION REQUIRED

BIT SET WHEN SCU BITE TEST, A/D BITE TEST, OR CORE POWER SUPPLY BITE TEST SUCCESSFULLY COMPLETED

1. THE FLEX MDM CARD CONFIGURATION IS MISSION DEPENDENT. A FLEX MDM HAS 1 CORE POWER SUPPLY, 1 MIA, 1 SCU, 1 A/D CONVERTER, AND 8 I/O MODULES.

2. CIRCUIT IS UNIQUE TO '6XXX' SERIES MDM'S (POST OV-102 'INCREMENT III' DESIGN) DOES NOT UTILIZE MASTER/SLAVE OSCILLATOR BUS SELECT LOGIC TO DRIVE DC-DC CONVERTERS). DUE TO LIMITED SPARES, THESE MDM'S MAY BE FLOWN ON ANY ORBITER.

3. CIRCUIT IS UNIQUE TO '5XXX' SERIES MDM'S (OV-102 DESIGN, DEVELOPMENT, TEST, AND EVALUATION UNITS). DUE TO LIMITED SPARES, THESE MDM'S MAY BE FLOWN ON ANY ORBITER.

4. MDM WIRED ADDRESS (DECIMAL):

FF 1 - FF 4		FA 1 - FA 4		FLX 1	LL 1	8	OF 1 12 OA 1 10
PF 1	10	PF 2	12	FLX 2	LL 2	6	OF 2 15 OA 2 6
LF 1		LA 1			LR 1	15	OF 3 17 OA 3 9
				+ LM 1	LR 2	18	OF 4 18

* MISSION DEPENDENT ADRS = 6, 9, 15, 29, OR 30
+ LM 1 IS USED FOR EDO MISSIONS

13 EMDM 1

NATIONAL AERONAUTICS AND SPACE ADMINISTRATION LYNDON B. JOHNSON SPACE CENTER HOUSTON, TEXAS	SIGNATURE	DATE
ENHANCED MULTIPLEXER/ DEMULTIPLEXER	DSGN L. BUCHANAN	11-7-78
	DR L. BUCHANAN	11-7-78
	ENGR K. AKAGI	
	ENGR Rocky Arias	5/15/96
	APP [illegible]	5-15-96
	APP H. J. Varney	6-15-96
DWG NO 8.13	SPACE SHUTTLE ALL	CADS
SHEET 1 OF 4 PAGE	12&.5 X 34	LTR E PCN 6

EMDM COMMAND WORD AND RESPONSE DATA WORD FORMATS

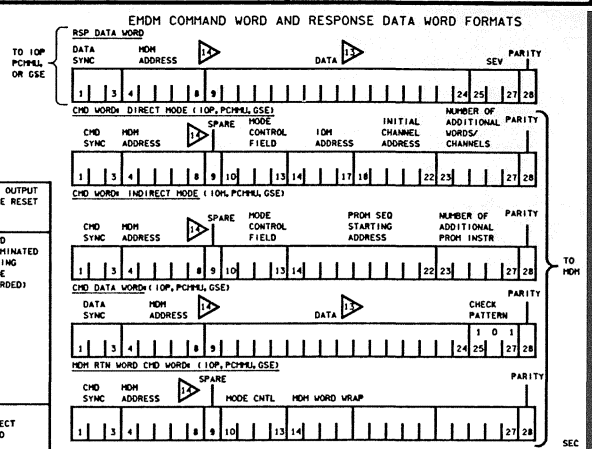

EMDM OPERATION OVERVIEW

MIA RECEIVES CMD WD VIA DATA BUS, CONVERTS WORD FROM SERIAL MANCHESTER TO NRZ AND SENDS WORD SERIALLY TO THE SCU. SCU CONVERTS SERIAL NRZ TO PARALLEL DATA, 4 OR 5 BITS AT A TIME. THESE 4-BIT OR 5-BIT GROUPS ARE PROCESSED EVEN AS THE MIA RECEIVES THE REMAINDER OF THE WORD. THE FIRST 5 BITS (MDM ADDRESS) ARE COMPARED WITH MDM'S OWN WIRED ADRS. IF ADRS OK (AD SYNC=1), PWR IS APPLIED TO THE CONTROL STORE PROMS (MDM MICRO-PROCESSOR). THE SUBSEQUENT INCOMING DATA (4 OR 5 BITS AT A TIME) IS ROUTED THRU THE MDM UNDER PROGRAM CONTROL. THE INCOMING MODE CONTROL FIELD DIRECTS THE MICRO-PROCESSOR TO A SPECIFIC PROGRAM BRANCH. REFER TO THE "MDM PROGRAM INTERPRETATION HANDBOOK" (JSC-10579) FOR DETAILED PROGRAM LOGIC

1. DATA FIELD DEFINES THE DATA TO BE SENT TO OR RECEIVED FROM AN IOM

2. SIGNALS SCU THAT THE IOM HAS BEEN SELECTED, THAT THE SCU CONTROL WORD HAS VALID CHANNEL ADDRESS, VALID TASK AND PROPER CHECK BITS, AND THAT THE REQUESTED OPERATION HAS BEEN PERFORMED

3. SEQ PROM IS USED IN INDIRECT MODE FOR CMD DATA OR RESPONSE DATA XFERS AND IS PROGRAMMED UNIQUELY FOR EACH MDM TYPE. EACH PROM CMD WORD CAN INITIATE XFER OF 1 TO 16 MDM RESPONSE WORDS. MAX PROM PROGRAM LENGTH IS 32 CMD WORDS. IOM CLASS FIELD IS DETERMINED FROM IOM ADDRESS FOR BOTH DIRECT AND INDIRECT MODE. THE IOM CLASS FIELD THEN OVERLAYS THE IOM ADDRESS IN THE REGISTER FILE

4. DURING INITIAL PWR-UP SEQUENCE (AFTER DSC), DELAYED DEAD STOP CLEAR HOLDS ADRS BIT REGISTER RESET UNTIL CONTROL STORE PROM IS ENABLED. THIS FORCES PROGRAM TO OCTAL ADRS 000 (INITIAL PWR UP). UNLESS PWR LOSS (DSC) OCCURS, SUBSEQUENT PROGRAM BRANCHES ARE CONTROLLED BY CONTENTS OF THE "SPECIAL" REG (PWR INT BIT, CMD SYNC BIT). FIRST INSTRUCTION WILL BE EXECUTED 5µ SEC AFTER MDM ADRS COMPARISON (ZONE M-5)

5. 5-BIT UPPER AND 4-BIT LOWER UP/DOWN COUNTERS ARE CONTROLLABLE VIA SCU MICRO INSTRUCTION. COUNTERS FUNCTION AS:
   1. COUNT DOWN NUMBER OF WORDS TO BE TRANSFERRED
   2. INCREMENT CHANNEL ADDRESS
   3. HOLD AND INCREMENT 9 BIT ADDRESS FOR PROM EXECUTION
   4. CONDITIONAL BRANCH REGISTER (COUNTER UNDER FLOW)

6. IOM REPLY (IRP) AND A/D REPLY (ADR) ARE NORMALLY LOGIC ZERO WITH SIGNALS SET ONLY AT SPECIFIED TIMES. MICRO PROGRAMS PERFORM A REPLY BUS CHECK PRIOR TO RECEIPT OF DATA TO VERIFY REPLY LINES NOT FAILED ON

7. SELECTS A/D MODE OF OPERATION. IOM DATA OR ONE OF FIVE BITE TEST MODES. A/D CONV BITE TEST RETURNS FIVE BSR DATA WORDS: +FS, -REF, NULL, +REF, +FS

8. MIA AND SCU ARE HELD IN RESET CONDITION UNTIL 90 PERCENT POWER LEVEL IS REACHED. AFTER RESET PERIOD, THE SCU CONDUCTS SCU POWER-UP BITE TESTS AND AFTER SUCCESSFUL COMPLETION ENABLES THE MIA

9. FORTY-SIX INPUTS EXCLUSIVE OR'ED TO PRODUCE AN 8-BIT TEST FIELD:
   1. ALL CONDITION SET DISCRETES EXCEPT "EOMP"
   2. CONTROL STORE PROM BITS 17 THRU 37 EXCEPT BIT 35 (CYCLIC LOAD)
   3. RSP WD CHECK-BIT VERIFICATION DETECTED INTERNAL ERROR (ZONE D-7)

10. NONCOMPARISON RESULTS IN IMMEDIATE RESET OF BOTH MIA AND SCU. RESET CONDITION CAN ONLY BE REMOVED BY CYCLING POWER TO THE MDM. PORT MODING WILL ALSO RECOVER MDM

11. BOTH POWER SUPPLIES ARE CONTINUOUSLY IN OPERATIONAL POWER SUPPLY DESIGN DOES NOT ATTEMPT TO BALANCE THE POWER PROVIDED BY EACH BUS.

    DURING PS BITE TESTS, REGULATORS ARE 'INHIBITED' (BY REDUCING REGULATION VALUE ABOUT 2-3%) IN ORDER TO FORCE OTHER CHANNEL TO CARRY FULL LOAD. IF OTHER PWR SUPPLY HAS FAILED, OUTPUT WILL DECREASE TO REGULATION LEVEL OF PWR SUPPLY BEING TESTED

12. CAPABLE OF MAINTAINING POWER FOR 2 MILLISECONDS IN EVENT OF LOSS OF PRIME POWER

13. DESCRIBES OPS MDM SWITCH, POWER SOURCE, AND TM POINT CORRELATION. PWR AND CNTLS FOR OI MDM'S SHOWN ON DWG 17.1. FLEX MDM PWR AND CNTLS ARE MISSION DEPENDENT.

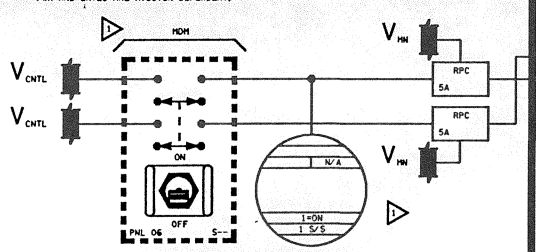

EMDM	PNL 06 SWITCH NAME	PNL 06 SWITCH SW NO	PNL 06 SWITCH PNL NO	EMDM POWER SUPPLY 1 POWER SOURCE V_{CNTL}	EMDM POWER SUPPLY 1 POWER SOURCE V_{MN} PCA	EMDM POWER SUPPLY 2 POWER SOURCE V_{CNTL}	EMDM POWER SUPPLY 2 POWER SOURCE V_{MN} PCA	MML NO	TLM SOURCE	MML NAME
FF 1	FF 1	S26	06	AB2	MNA FPC1	AB3	MNB FPC2	V72S7981E	OF 1	MDM FF 1 PWR SUPPLY NO 1-RPC
FF 2	FF 2	S27	06	BC2	MNB FPC2	BC3	MNC FPC3	V72S7983E	OF 2	MDM FF 2 PWR SUPPLY NO 1-RPC
FF 3	FF 3	S28	06	CA3	MNC FPC3	CA2	MNA FPC1	V72S7985E	OF 3	MDM FF 3 PWR SUPPLY NO 1-RPC
FF 4	FF 4	S29	06	BC1	MNB FPC2	BC3	MNC FPC3	V72S7987E	OF 4	MDM FF 4 PWR SUPPLY NO 1-RPC
FA 1	FA 1	S21	06	AB1	MNA APC4	AB2	MNB APC5	V72S7991E	OA 1	MDM FA 1 PWR SUPPLY NO 1 RPC
FA 2	FA 2	S22	06	BC1	MNB APC5	BC2	MNC APC6	V72S7993E	OA 2	MDM FA 2 PWR SUPPLY NO 1-RPC
FA 3	FA 3	S23	06	CA2	MNC APC6	CA1	MNA APC4	V72S7995E	OA 3	MDM FA 3 PWR SUPPLY NO 1-RPC
FA 4	FA 4	S24	06	CA3	MNC APC6	CA1	MNA APC4	V72S7997E	OA 3	MDM FA 4 PWR SUPPLY NO 1-RPC
PF 1	PL 1	S52	06	AB1	MNA FPC1	AB3	MNB FPC2	V72S7972E	OF 2	PL MDM PF 1 PWR SUPPLY NO 2-RPC
PF 2	PL 2	S20	06	BC1	MNB FPC2	BC3	MNC FPC3	V72S7973E	OF 2	PL MDM PF 2 PWR SUPPLY NO 1-RPC
LF 1				GSE	PREFLT 1	GSE	PREFLT 2			
LA 1				GSE	PREFLT 1	GSE	PREFLT 2			
LL 1				MEC 1	MNA APC1	MEC 2	MNB APC2			
LL 2				MEC 1	MNA APC1	MEC 2	MNB APC2			
LR 1				MEC 1	MNA APC1	MEC 2	MNB APC2			
LR 2				MEC 1	MNA APC1	MEC 2	MNB APC2			
LM 1				GSE	PREFLT 1	GSE	PREFLT 2			

POWER AND CONTROLS FOR OI MDM'S ARE SHOWN ON DWG 17.1-1

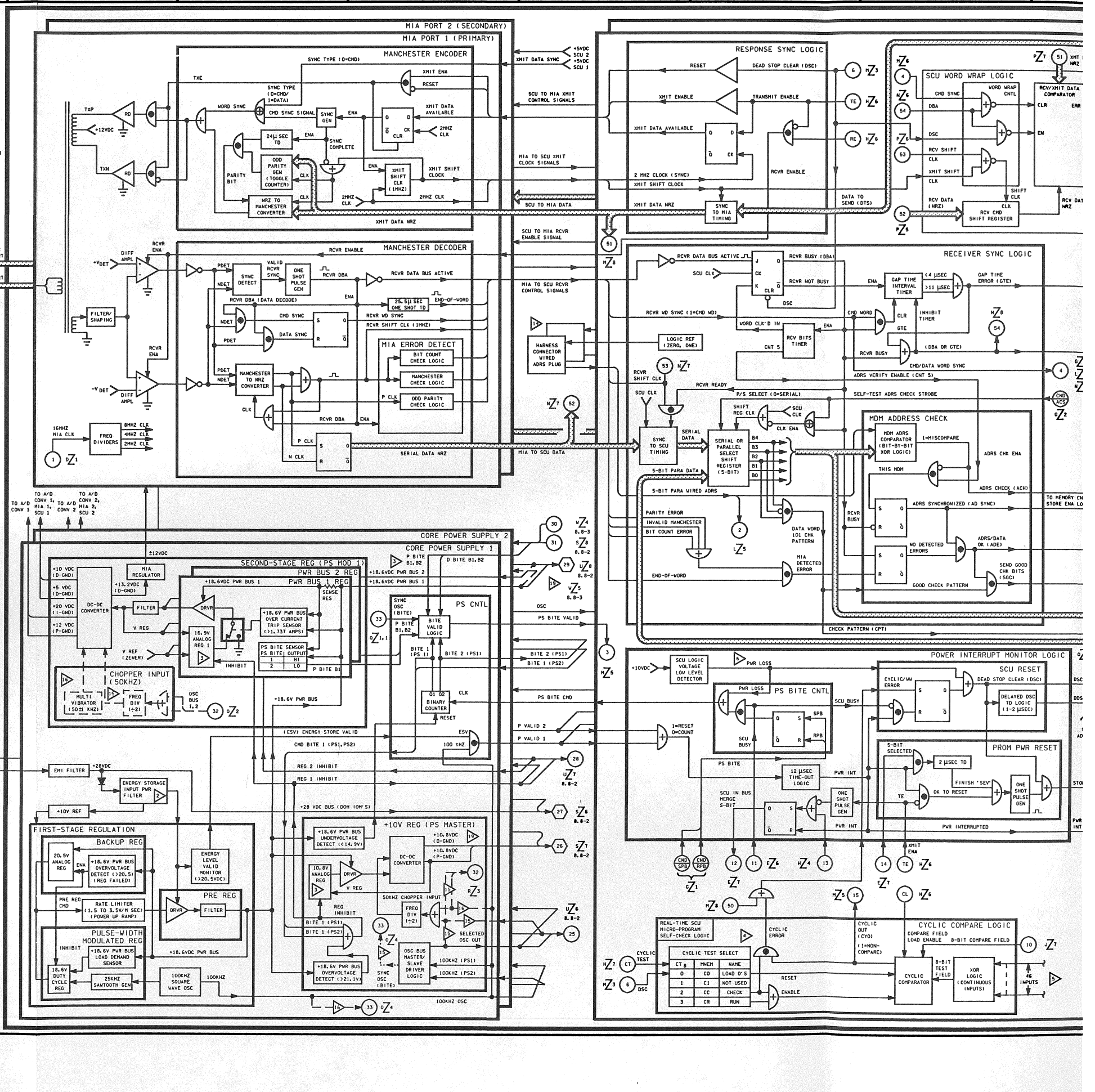

BASIC REV E-6

DATE: 02/19/92	NAME: JMB	VERSION: BPT.4
DATE: 03/04/92	NAME: LAM	VERSION: BPT.5
DATE: 03/09/92	NAME: MFB	VERSION: INK.1

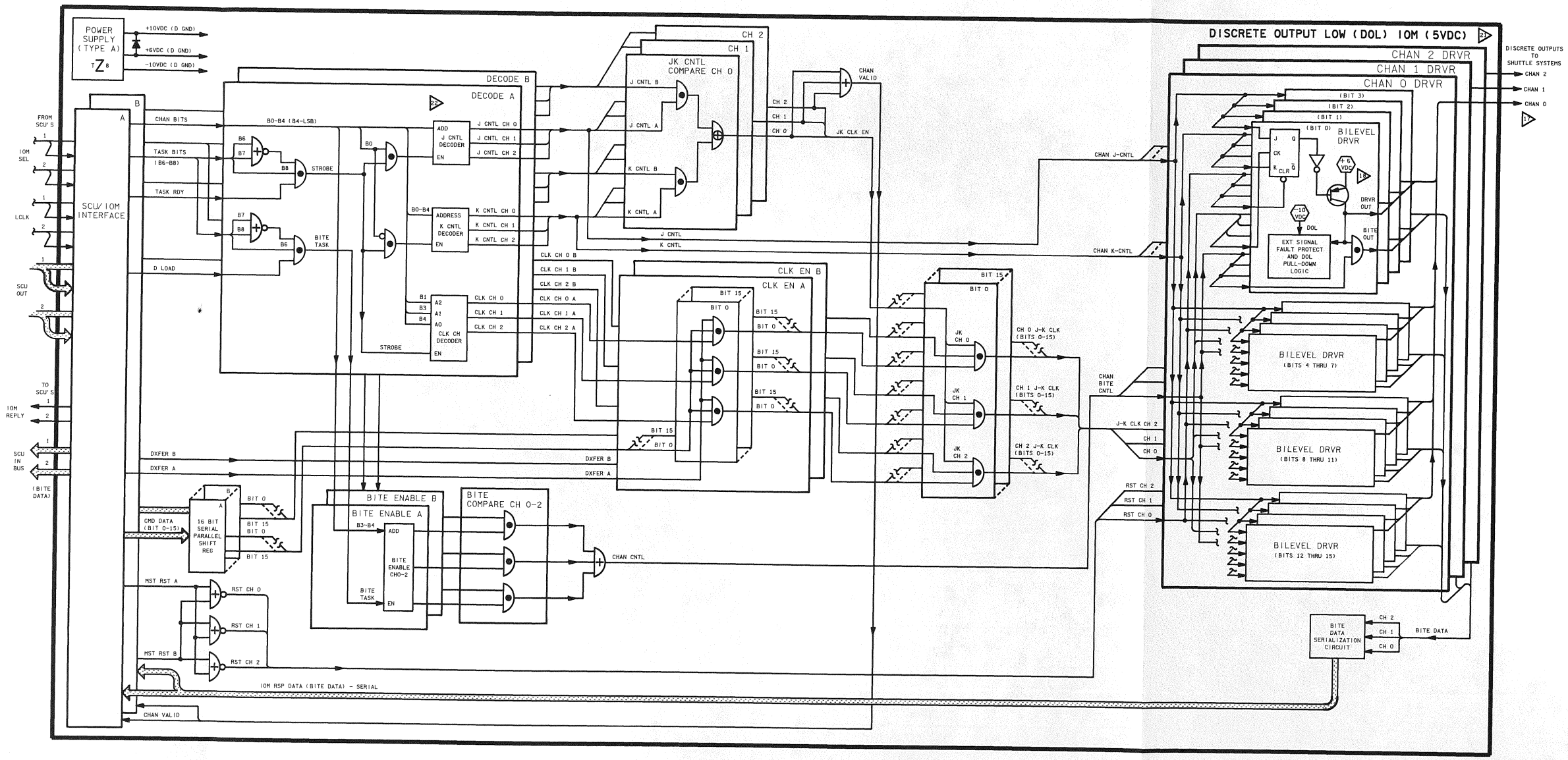

(1) SELECTED DISCRETES WITHIN A SPECIFIED CHANNEL MAY BE EITHER SET OR RESET SIMULTANEOUSLY, HOWEVER, DISCRETES CANNOT BE BOTH SET AND RESET DURING THE SAME OPERATION (TWO SEPARATE CMD DATA WORDS ARE REQUIRED). BIT 1 (B1) OF CHANNEL ADDRESS CONTROLS THE SET/RESET ACTION (SET=1, RESET=0)

(2) DOL AND DOH IOM CARDS HAVE 6 TRANSPARENT CHANNELS (CHANNELS ARE NOT CONNECTED TO OUTPUTS). THESE CHANNELS CAN BE ADDRESSED FOR BITE STATUS INFORMATION ON THE IOM (EMDM ONLY)

(3) EACH IOM POWER SUPPLY IS LOCATED ON THE IOM CARD ITSELF (EMDM ONLY)

(4) THE 100 KHZ OSCILLATOR BUS INPUTS AND FREQUENCY DIVIDER CIRCUIT ARE UNIQUE TO "SXXX" SERIES MDM'S. FREE RUNNING MULTI-VIBRATOR CIRCUIT DESIGN IS UNIQUE TO "6XXX" SERIES MDM'S. REF DWG 8.8 SHEET 1 NOTES 15 AND 16 FOR ADDITIONAL DETAIL

(5) DOL IOM DRIVER VOLTAGE = +6VDC
DOH IOM DRIVER VOLTAGE = +28VDC
THE -10VDC IS APPLICABLE ONLY TO THE DOL IOM (UTILIZED BY THE LOGIC ZERO PULL-DOWN CIRCUIT)

(6) DOL IOM GENERATED LOGIC "ONE" STATE IS +5 ±1VDC. THE LOGIC "ZERO" STATE IS 0 ±0.5VDC

(7) DIH IOM INPUT SIGNALS OF +28VDC INTERPRETED AS A LOGIC "ONE", 28VDC PWR GROUND AS A LOGIC "ZERO" (INPUTS ARE THRESHOLDED AGAINST A +8VDC REF)

(8) AID AND AIS IOM INPUT SIGNAL RANGE IS +5.11 TO -5.12VDC WITH A MAXIMUM FULL-SCALE DIFFERENTIAL VOLTAGE OF 5.12VDC (LARGER INPUTS INTERPRETED AS FULL SCALE). AFTER A/D CONVERSION, THE TOTAL ACCURACY OF THE DIGITAL VALUE IS WITHIN 1.0 PCT OF FULL SCALE (51 MV)

(9) FOR AID (CH 0-15) AND AIS (CH 0-31) IOM BITE TEST, TWO SEPARATE A/D CONVERTED RESPONSE DATA WORDS ARE SENT TO THE GPC:
RSP WORD 1 = ANALOG BITE VALUE = 1/2(INPUT SIG) + (BITE REF)
RSP WORD 2 = NON-BITE VALUE = INPUT SIGNAL
IOM BITE REFERENCE VOLTAGE:
(+) = +2.0 VDC = BITE REF 1)
(-) = -2.0 VDC = BITE REF 2)

CH 0 +	CH 4 −	CH 8 −	CH 12 +	CH 16 −	CH 20 +	CH 24 +	CH 28 −
CH 1 −	CH 5 +	CH 9 +	CH 13 −	CH 17 +	CH 21 −	CH 25 −	CH 29 +
CH 2 −	CH 6 +	CH 10 +	CH 14 −	CH 18 +	CH 22 −	CH 26 −	CH 30 +
CH 3 +	CH 7 −	CH 11 −	CH 15 +	CH 19 −	CH 23 +	CH 27 +	CH 31 −

(10) DIL IOM INPUT SIGNALS OF +5VDC INTERPRETED AS A LOGIC "ONE", 0VDC AS A LOGIC "ZERO". (INPUTS ARE THRESHOLDED AGAINST A +2.25VDC REF)

(11) CHAN BITS (CHANNEL ADDRESS) LATCHED VIA "CHAN RDY" TIMING SIGNAL AFTER FIFTH SERIAL DATA BIT CLOCKED TO OUTPUT OF SHIFT REGISTER. TASK BITS (IOM TASK) SIMILARLY LATCHED VIA "TASL RDY" SIGNAL AFTER EIGHTH SERIAL DATA BIT

(12) SIGNAL "INPUT" CONNECTION (BUS CNTL HYBRID) IS A FUNCTION OF THE IOM TYPE:
DOL, DOH, AOD, SIO, TAC — SIGNAL "TASK RDY"
DIL, DIH, AID, AIS — SIGNAL GROUND (LOGIC ZERO) (THIS FORCES SIGNAL "I/O CNTL" ALWAYS TO LOGIC "ONE" STATE)
SIGNAL "SER IOM" CONNECTION (BUS CNTL HYBRID) IS A FUNCTION OF THE IOM TYPE:
SIO, TAC — + 10VDC (LOGIC ONE)
ALL OTHERS — SIGNAL GROUND (LOGIC ZERO) (THIS DISABLES LOGIC GATE)

(13) THE SRB MDM DOL IOM (DWG 8.8, SHT 3) DOES NOT ROUTE THE SIGNAL "RESET" TO THE BUS RCVR MODULES AND THUS, CANNOT RESPOND TO IOM RESET CMDS FROM THE SCU

(14) PARALLEL DATA LINES ROUTE "CMD DATA" (BITS B9-B24) TO THE FOLLOWING IOM TYPES ONLY:
AOD (12 BITS) DOL (16 BITS) SIO (16 BITS)

(15) IF BOTH "IOM SEL" 1&2 ARE ENABLED, ALL I/O CARD CMDS WILL BE "LOCKED OUT" UNTIL THE FAILED "IOM SEL" DISCRETE IS RESET (PROBABLY VIA MDM PWR CYCLE)

(16) SIGNAL "I/O CNTL" CONTROLS INITIALIZATION OF TIMER NO 2 WHICH, IN TURN, CONTROLS ALL SUBSEQUENT IOM TIMING AND CONTROL SIGNALS FOR PRESENT SCU CMD

(17) IOM SIGNAL "CLK" IS USED EXTENSIVELY (BUT NOT SHOWN) IN EVERY MODULE TO CLOCK D-TYPE AND J-K TYPE FLIP FLOPS, SHIFT REGISTERS, AND COUNTERS

(18) THE 28VDC (USED ONLY BY DOH IOM'S) DOES NOT HAVE ENERGY STORAGE ASSOCIATED WITH IT, AND THEREFORE, WILL NOT TOLERATE A 2-MILLI SEC DROPOUT

(19) DURING PS BITE TESTS, REGULATORS ARE "INHIBITED" (BY REDUCING REGULATION VALUE ABOUT 2-3 PCT) IN ORDER TO FORCE OTHER REGULATOR TO CARRY FULL LOAD. IF OTHER REG HAS FAILED, OUTPUT WILL DECREASE TO REGULATION LEVEL OF PWR SUPPLY BEING TESTED

(20) POWER SUPPLIES "TYPE A" AND DOH IOM "TYPE B" UTILIZE CURRENT OVERLOAD PROTECTION LOGIC TO PROVIDE FAULT ISOLATION (CORE PWR SUPPLY PROTECTION). IF OVERLOAD TRIP CURRENT VALUE (TYPICALLY, APPROXIMATELY TEN TIMES MAX BITE VALUE) IS EXCEEDED, TRIP LOGIC CAN BE RESET ONLY BY CYCLING THE MDM POWER SWITCH (PNL O6)

(21) FOR DIL AND DIH IOM BITE TEST, INPUT DISCRETES ARE BYPASSED. INSTEAD, SPECIFIC BITS ARE SET/RESET VIA SELECTION OF BITE TEST 1 OR 2:

BITS	BITE TEST 1			BITE TEST 2		
	CH 0	CH 1	CH 2	CH 0	CH 1	CH 2
0-3	RESET	RESET	SET	SET	SET	RESET
4-7	SET	SET	RESET	RESET	RESET	SET
8-11	SET	RESET	SET	RESET	SET	RESET
12-15	RESET	SET	RESET	SET	RESET	SET

NOTES: (1) AOD IOM UTILIZES ONLY FIRST 12 BITS (NOMINALLY, ONLY FIRST TEN BITS CONTAIN DATA)

13 EMDM 2

SIGNATURE	DATE	NATIONAL AERONAUTICS AND SPACE ADMINISTRATION LYNDON B. JOHNSON SPACE CENTER HOUSTON, TEXAS	
DSGN PAT SHERRILL			
DR			
ENGR KATHY AKAGI		ENHANCED MULTIPLEXER/ DEMULTIPLEXER	
ENGR Kathy Akagi	3-17-92		
APP Terrie B. Murphy	3-17-92		
APP		SPACE SHUTTLE	DWG NO 8.13
OMNIPLAN S.K. Simmons	4-30-92	ALL	
LTR E	PCN 2	121 X 34	PAGE SHEET 2 OF 4

BASIC REV E-2

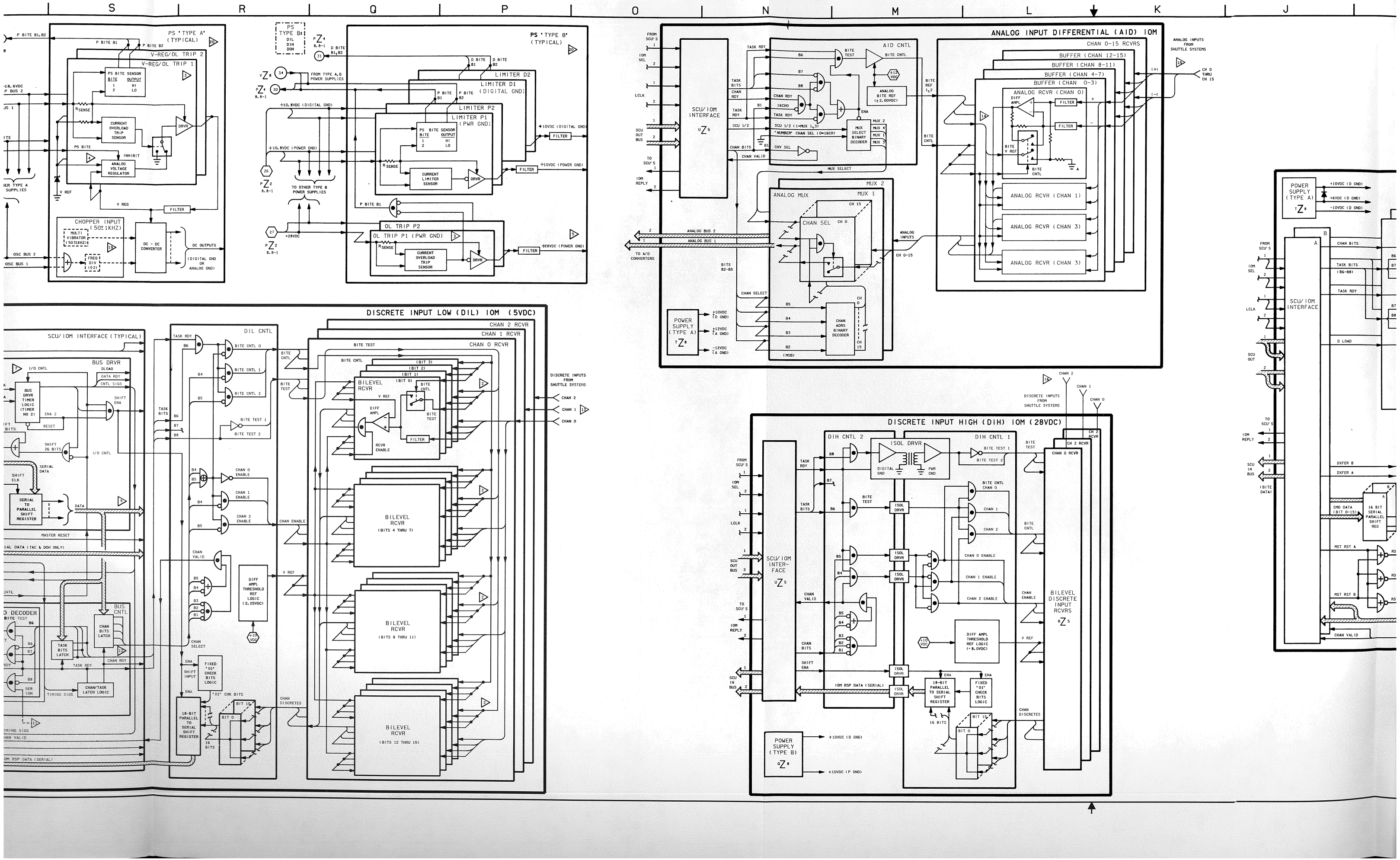

S
R
Q
P
O
N
M
L
K
J
PS 'TYPE A' (TYPICAL)
V-REG/OL TRIP 2
V-REG/OL TRIP 1
CURRENT OVERLOAD TRIP SENSOR
ANALOG VOLTAGE REGULATOR
CHOPPER INPUT (50±1KHZ)
DC - DC CONVERTER
DC OUTPUTS
PS 'TYPE B' (TYPICAL)
LIMITER D2
LIMITER D1 (DIGITAL GND)
LIMITER P2
LIMITER P1 (PWR GND)
CURRENT LIMITER SENSOR
OL TRIP P2
OL TRIP P1 (PWR GND)
ANALOG INPUT DIFFERENTIAL (AID) IOM
SCU/IOM INTERFACE
AID CNTL
MUX SELECT BINARY DECODER
CHAN 0-15 RCVRS
BUFFER (CHAN 12-15)
BUFFER (CHAN 8-11)
BUFFER (CHAN 4-7)
BUFFER (CHAN 0-3)
ANALOG RCVR (CHAN 0)
ANALOG RCVR (CHAN 1)
ANALOG RCVR (CHAN 3)
ANALOG MUX
MUX 2
MUX 1
CHAN SEL
CHAN ADRS BINARY DECODER
POWER SUPPLY (TYPE A)
DISCRETE INPUT LOW (DIL) IOM (5VDC)
SCU/IOM INTERFACE (TYPICAL)
BUS DRVR
DIL CNTL
CHAN 2 RCVR
CHAN 1 RCVR
CHAN 0 RCVR
BILEVEL RCVR
BILEVEL RCVR (BITS 4 THRU 7)
BILEVEL RCVR (BITS 8 THRU 11)
BILEVEL RCVR (BITS 12 THRU 15)
DIFF AMPL THRESHOLD REF LOGIC (2.25VDC)
FIXED '01' CHECK BITS LOGIC
18-BIT PARALLEL TO SERIAL SHIFT REGISTER
SERIAL TO PARALLEL SHIFT REGISTER
DISCRETE INPUT HIGH (DIH) IOM (28VDC)
DIH CNTL 2
DIH CNTL 1
ISOL DRVR
SCU/IOM INTER-FACE
BILEVEL DISCRETE INPUT RCVRS
DIFF AMPL THRESHOLD REF LOGIC (-8.0VDC)
18-BIT PARALLEL TO SERIAL SHIFT REGISTER
FIXED '01' CHECK BITS LOGIC
POWER SUPPLY (TYPE B)
POWER SUPPLY (TYPE A)
SCU/IOM INTERFACE
16 BIT SERIAL PARALLEL SHIFT REG

DATE: 03/09/92 | NAME: MFB | VERSION: INK.1

IOM TASK:
000 - RSP DATA REQUEST (INPUT IOM'S)
001 - CMD DATA TRANSFER (OUTPUT IOM'S)
01X - RESET IOM
1X0 - BITE TEST 1
1X1 - BITE TEST 2

CHECK BITS:
01 - EXECUTE CMD
OTHER - ILLEGAL CODE (TERMINATES CMD)

INPUT IOM CMD FORMAT (FROM SCU)

OUTPUT IOM CMD FORMATS (FROM SCU)

IOM RESPONSE DATA WORD FORMAT (TO SCU)

PS TYPE A:
A1S
A1D
A0D
D0L
S1O
TAC

PS TYPE B:
DIL
DIH
D0H

PS "TYPE A" (TYPICAL)

PS "TYPE B" (TYPICAL)

SCU/IOM INTERFACE (TYPICAL)

DISCRETE INPUT LOW (DIL) IOM (5VDC)

DIH CNTL

BASIC REV E-2

DATE: 02/05/92	NAME: BJT	VERSION: BPT.1
DATE: 02/19/92	NAME: JMB	VERSION: BPT.2
DATE: 2-08-93	NAME: SKK	VERSION: INK.1

A1S) 10M
VRS

ANALOG INPUTS FROM SHUTTLE SYSTEMS
(+) CH 0 THRU CH 31 ▷

OD) 10M
RVR
R

ANALOG OUTPUTS TO SHUTTLE SYSTEMS
HI
LO
CH 0 THRU CH 15 ▷

DISCRETE OUTPUT HIGH (DOH) 10M (28VDC) ▷B

10M SEL FROM SCU'S
LCLK FROM SCU'S
SCU OUT BUS
10M REPLY TO SCU'S
SCU IN BUS TO SCU'S
(BITE DATA)

10M SEL 2
10M SEL 1
LCLK 2
LCLK 1
SCU OUT 2
SCU OUT 1

BUS ISOLATION CIRCUIT

SCU/10M INTERFACE U25 8.13-2

CHAN BITS
TASK BITS
TASK RDY
DLOAD
DXFER B
DXFER A
CMD DATA (BIT 0-15)

16 BIT SERIAL PARALLEL SHIFT REGISTER

MST RST B
MST RST A

DECODE H26 8.13-2 ▷

J CNTL B
J CNTL A
K CNTL B
K CNTL A

J-K CNTL COMPARE G26 8.13-2

CH 2
CH 1
CH 0

CHAN VALID

J CNTL
K CNTL

CLK CH0-2 B
CLK CH0-2 A

BITE TASK
B3-B4

BITE ENABLE H23 8.13-2

BITE COMPARE CH0-2 H23 8.13-2

CHAN CNTL

DXFER B
DXFER A

CLK EN COMPARE G24 8.13-2

CLK CH 0 (BITS 0-15)
CLK CH 0 (BITS 0-15)
CLK CH 1 (BITS 0-15)
CLK CH 1 (BITS 0-15)
CLK CH 2 (BITS 0-15)
CLK CH 2 (BITS 0-15)

JK CLK EN

CHAN/BIT CLK (BITS 0-15) I24 8.13-2

BIT 15
BIT 0

CH 0 J-K CLK (BITS 0-15)
CH 1 J-K CLK (BITS 0-15)
CH 2 J-K CLK (BITS 0-15)

CHANNEL DRIVER D25 8.13-2

CH 2
CH 1
J-K CLK CH 0

RST CH 2
RST CH 1
RST CH 0

CHAN BITE CNTL

BITE DATA SERIAL CIRCUIT

CH 2
CH 1
CH 0

BITE DATA

DISCRETE OUTPUTS TO SHUTTLE SYSTEMS
CHAN 2
CHAN 1 ▷
CHAN 0

IOM RSP DATA (BITE DATA) - SERIAL
CHAN VALID

POWER SUPPLY (TYPE B) U28 8.13-2
+10VDC (D GND)
+10VDC (P GND)
+28VDC (P GND)

▷ SELECTED DISCRETES WITHIN A SPECIFIED CHANNEL MAY BE EITHER SET OR RESET SIMULTANEOUSLY. HOWEVER, DISCRETES CANNOT BE BOTH SET AND RESET DURING THE SAME OPERATION (TWO SEPARATE CMD DATA WORDS ARE REQUIRED). BIT 1 (BI) OF THE CHANNEL ADDRESS CONTROLS THE SET/RESET ACTION. (SET=1, RESET=0)

▷B DOL AND DOH IOM CARDS HAVE 6 TRANSPARENT CHANNELS (CHANNELS ARE NOT CONNECTED TO OUTPUTS). THESE CHANNELS CAN BE ADDRESSED FOR BITE STATUS INFORMATION ON THE IOM (EMDM ONLY)

▷ THE DOH GENERATED LOGIC 'ONE' STATE IS ~28VDC; THE LOGIC 'ZERO' STATE IS 28VDC PWR GROUND

▷ AUTOMATIC COMPENSATION OF INTERNAL AMPLIFIER GAINS PERMITS THE AOD IOM OUTPUT DRIVERS TO MAINTAIN A FULL-SCALE OUTPUT DIFFERENTIAL VOLTAGE OF 5.12VDC. EITHER OUTPUT SIGNAL MAY BE SHORTED TO GROUND
SINGLE-ENDED OUTPUT: GAIN X=0.8
DOUBLE-ENDED OUTPUT: GAIN X=0.4

▷ AOD DRIVER SIGNAL RANGE IS +5.11 TO -5.12VDC WITH A FULL SCALE DIFFERENTIAL VOLTAGE OF 5.12VDC. WITH DOUBLE-ENDED OUTPUT, SIGNAL WILL RANGE FROM +2.56 TO -2.56VDC
SIGNALS ARE GENERATED TO WITHIN AN ACCURACY OF 0.5 PCT OF FULL-SCALE (25 MV). D/A CONVERSION BEGINS APPROX 37.5μ SEC FROM RECEIPT OF THE CMD DATA WORD BY THE MDM. VOLTAGE SLEW TO THE DESIRED VALUE IS ACHIEVED WITHIN 30μ SEC THEREAFTER. SIGNAL WILL BE MAINTAINED AT THIS COMMANDED VALUE UNTIL RECEIPT OF A NEW CMD

▷A RESET NO 1 CLEARS CH 6 THRU 9
RESET NO 2 CLEARS CH 10 THRU 13
RESET NO 3 CLEARS CH 14,15 AND 0,1
RESET NO 4 CLEARS CH 2 THRU 5

▷ ON THE AIS IOM, ALL MINUS (-) INPUT LEAD CONNECTIONS ARE INTERNALLY GROUNDED. THUS, INPUTS AUTOMATICALLY REFERENCED TO ANALOG GROUND AND MAY BE POSITIVE OR NEGATIVE VOLTAGES WITH RESPECT TO GROUND

▷ AID AND AIS IOM INPUT SIGNAL RANGE IS +5.11 TO -5.12VDC WITH A MAXIMUM FULL-SCALE DIFFERENTIAL VOLTAGE OF 5.12VDC (LARGER INPUTS INTERPRETED AS FULL SCALE). AFTER A/D CONVERSION, THE TOTAL ACCURACY OF THE DIGITAL VALUE IS WITHIN 1.0 PCT OF FULL SCALE (51 MV)

NOTES: ▷ FOR AID (CH 0-15) AND AIS (CH 0-31) IOM BITE TEST, TWO SEPARATE A/D CONVERTED RESPONSE DATA WORDS ARE SENT TO THE GPC:
RSP WORD 1 = ANALOG BITE VALUE = 1/2(INPUT SIG)+ (BITE REF)
RSP WORD 2 = NON-BITE VALUE = INPUT SIGNAL
IOM BITE REFERENCE VOLTAGES:
(+) = +2.0 VDC = BITE REF 1)
(-) = -2.0 VDC = BITE REF 2)

CH 0 +	CH 4 −	CH 8 −	CH 12 +	CH 16 −	CH 20 +	CH 24 +	CH 28 −
CH 1 −	CH 5 +	CH 9 +	CH 13 −	CH 17 +	CH 21 −	CH 25 −	CH 29 +
CH 2 −	CH 6 +	CH 10 +	CH 14 −	CH 18 +	CH 22 −	CH 26 −	CH 30 +
CH 3 +	CH 7 −	CH 11 −	CH 15 +	CH 19 −	CH 23 +	CH 27 +	CH 31 −

13 EMDM 3

SIGNATURE	DATE	NATIONAL AERONAUTICS AND SPACE ADMINISTRATION LYNDON B. JOHNSON SPACE CENTER HOUSTON, TEXAS
DSGN PAT SHERRIL		
DR		
ENGR KATHY AKAGI		ENHANCED MULTIPLEXER/ DEMULTIPLEXER
ENGR		
APP	2-9-93	
APP		SPACE SHUTTLE
OMNIPLAN		ALL
LTR E PCN 2		82.5 X 34

DWG NO 8.13
PAGE SHEET 3 OF 4

BASIC REV E-2

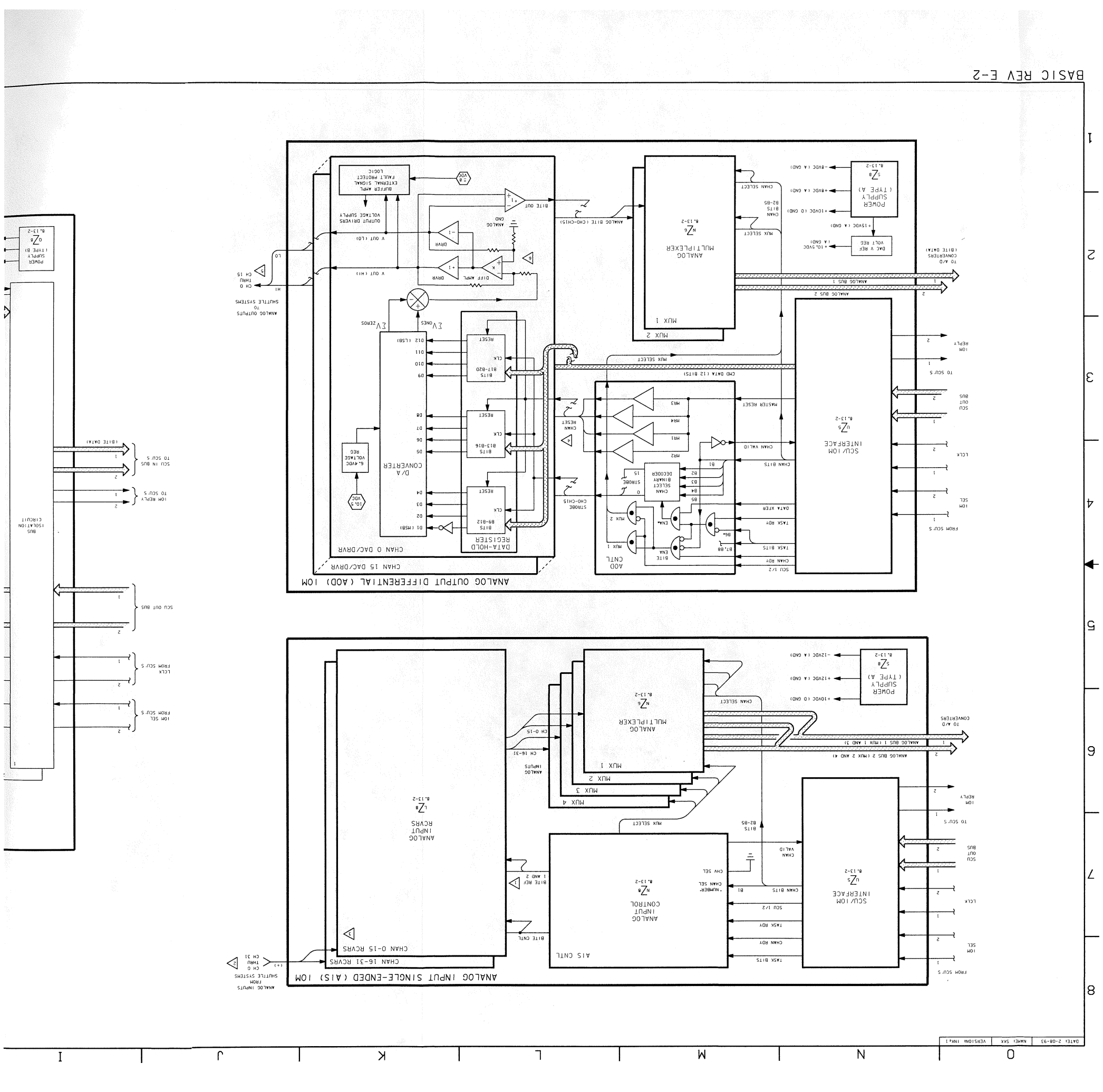
ANALOG OUTPUT DIFFERENTIAL (AOD) IOM
CHAN 15 DAC/DRVR
CHAN 0 DAC/DRVR
DATA-HOLD REGISTER
D/A CONVERTER
ANALOG MULTIPLEXER
MUX 1
MUX 2
SCU/IOM INTERFACE
POWER SUPPLY (TYPE A)
ANALOG OUTPUTS TO SHUTTLE SYSTEMS
ANALOG BUS 1
ANALOG BUS 2
ANALOG INPUT SINGLE-ENDED (AIS) IOM
CHAN 16-31 RCVRS
CHAN 0-15 RCVRS
ANALOG INPUT CONTROL
AIS CNTL
MUX 3
MUX 4
ANALOG INPUTS FROM SHUTTLE SYSTEMS

DATE= 10/21/91	NAME= JDF	VERSION= IMA 5
DATE= 01/15/92	NAME= BJT	VERSION= BPT 1
DATE= 02-07-93	NAME= SKK	VERSION= IMA 1

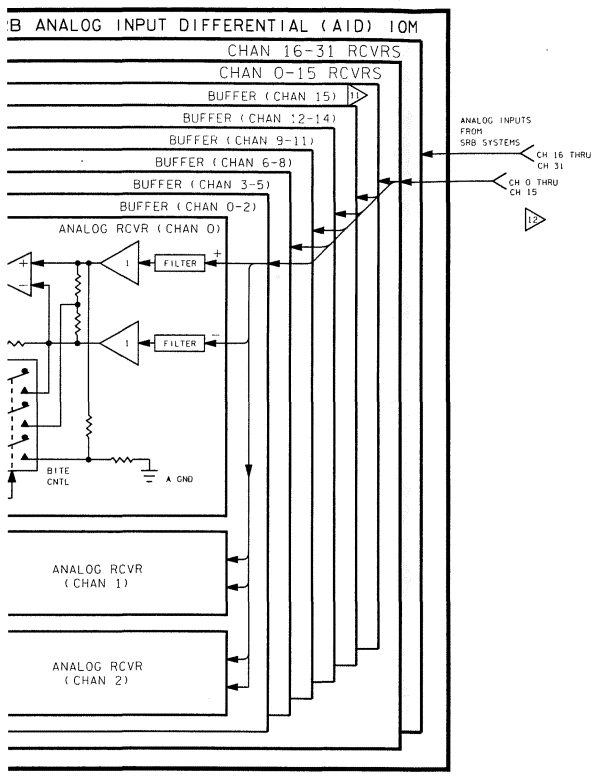

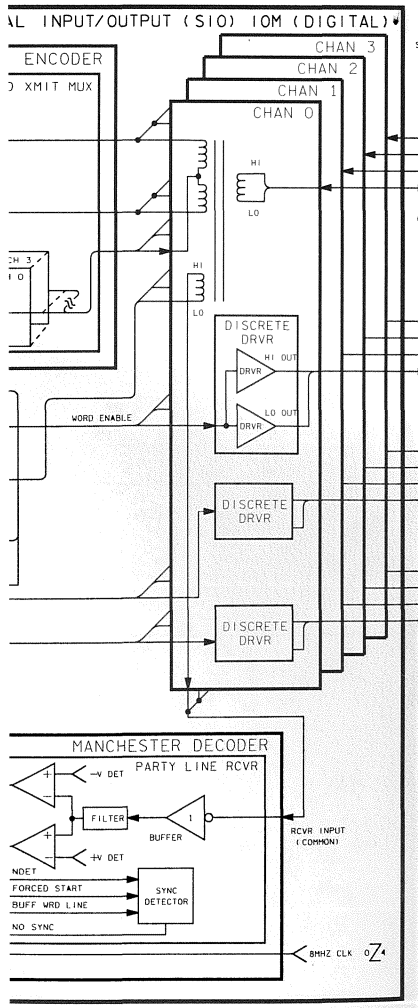

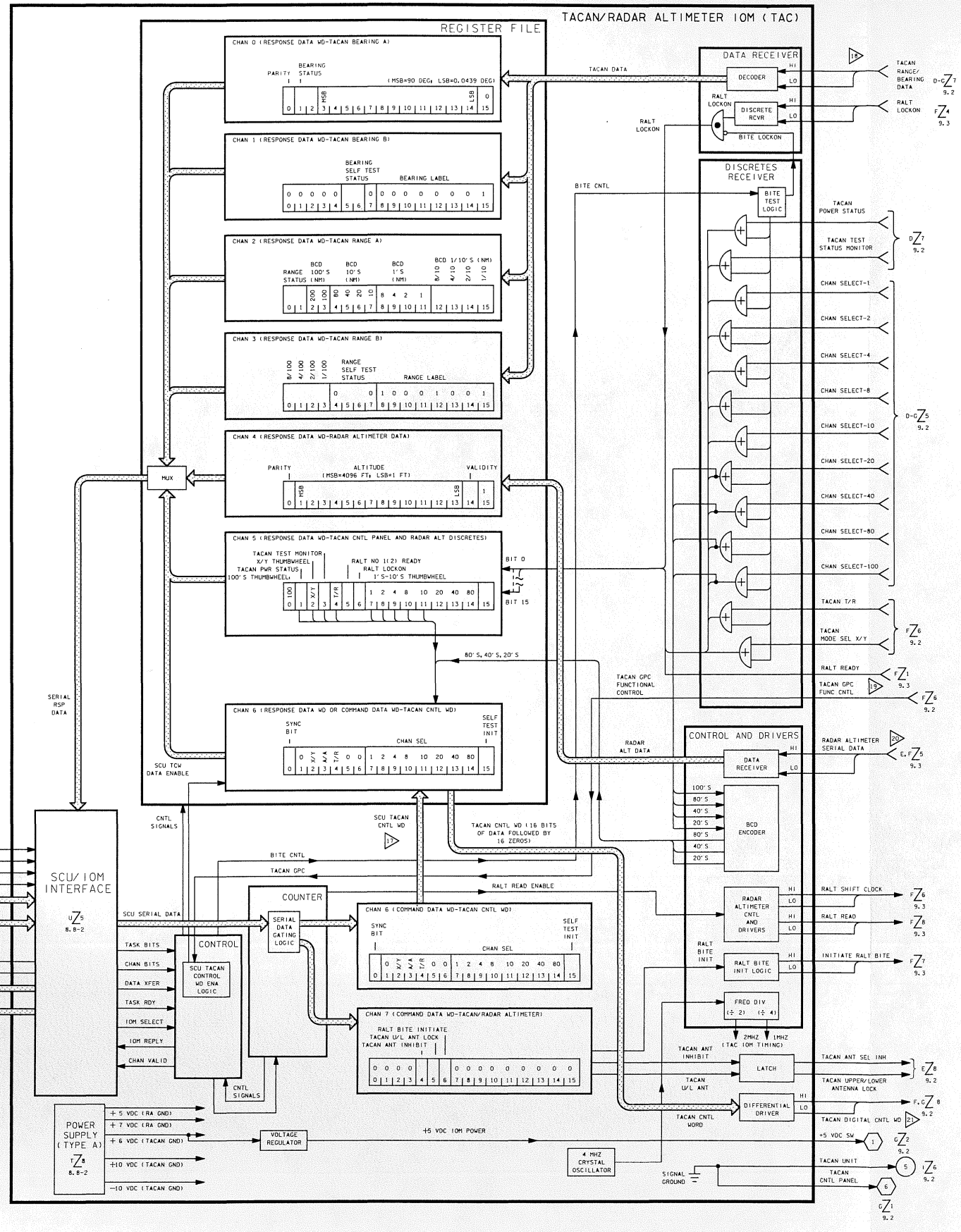

12 SIO CARD/LRU CHANNELIZATION

SERIAL MANCHESTER DATA TO/FROM SHUTTLE SYSTEMS

SERIAL DATA
- CHAN 3
- CHAN 2
- CHAN 1
- CHAN 0

CONTROL DISCRETE LINES TO SHUTTLE SYSTEMS

WORD DISCRETES
- CHAN 3
- CHAN 2
- CHAN 1
- CHAN 0

MSG OUT DISCRETES
- CHAN 3
- CHAN 2
- CHAN 1
- CHAN 0

MSG IN DISCRETES
- CHAN 3
- CHAN 2
- CHAN 1
- CHAN 0

TO SCU'S: IOM REPLY 1, SCU IN BUS 1

FROM SCU'S: IOM SEL 1, LCLK 1, SCU OUT BUS 1

23 EACH IOM POWER SUPPLY IS LOCATED DIRECTLY ON THE IOM CARD ITSELF (EMDM ONLY)

22 DUE TO POTENTIAL SINGLE-POINT FAILURES, SRB MDM'S HAVE BEEN MODIFIED TO ELIMINATE CROSS STRAPPING OF REDUNDANT PWR SUPPLIES INFLIGHT. PWR SUPPLY ISOLATION IS ACHIVED BY ISSUING "ISOLATE ENABLE" CMDS VIA THE LPS SHORTLY PRIOR TO ISSUING MDM LOCKOUT CMDS. PWR SUPPLY FAIL/SRB ELECTRICAL BUS SWITCHOVER WILL CAUSE LOSS OF ASSOCIATED SRB HYDRAULICS CHANNEL (IF PRE-LAUNCH, THIS WILL CAUSE AN AUTOMATIC LAUNCH HOLD).

21 SID/LRU CHANNELIZATION ASSIGNMENTS

FF'S CARD 03	FF'S CARD 11	PF'S CARD 08	PF'S CARD 15
CH00 - IMU	CH00 - ADTA	CH00 - SPARE	CH00 - (US/SL(PF1)
CH01 - MTU	CH01 - MLS	CH01 - PSP	CH01 - (US/SL(PF1)
CH02 - STKR	CH02 - SPARE	CH02 - KU-BAND(PF1)	CH02 - SPARE
CH03 - RRI(FF3)	CH03 - NSP	CH03 - SPARE	CH03 - SPARE

20 TACAN CONTROL WORD FORMAT:

				CH 1	CH 2	CH 4	CH 8	CH 10	CH 20	CH 40	CH 80	SELF TEST INIT																			
1	D	X/Y	MA	T/R	0	0							0	0	0	0	0	0	0	0	0	0	0	0	0	0	0	0	0	0	0	0
1	2	3	4	5	6	7	8	9	10	11	12	13	14	15	16	17	18	19	20	21	22	23	24	25	26	27	28	29	30	31	32

19 RADAR ALTIMETER DATA FORMAT:

PARITY	4096	2048	1024	512	256	128	64	32	16	8	4	2	1	VALIDITY	CONTROL	
1	2	3	4	5	6	7	8	9	10	11	12	13	14	15	16	

NOTE: THIS WORD IS TRANSMITTED BIT 16 FIRST

18 TACAN GPC "AUTO" SIGNAL IS ROUTED TO THE GPC(S) VIA DISCRETE IOM CARDS FF1-FF3 CARD 09 (DIH), CHAN 02 (BCE STRG "B" PROM SEQUENCE INPUTS)

17 TACAN RANGE DATA FORMAT:

RANGE STATUS (NM)	BCD 100'S (NM)		BCD 10'S (NM)			BCD 1'S (NM)				BCD 1/10'S (NM)				BCD 1/100'S (NM)				RANGE SELF-TEST STATUS		RANGE LABEL									
	200	100	80	40	20	10	8	4	2	1	8/10	4/10	2/10	1/10	8/100	4/100	2/100	1/100											
																			0	0	0	1	0	0	0	1	0	0	1
1	2	3	4	5	6	7	8	9	10	11	12	13	14	15	16	17	18	19	20	21	22	23	24	25	26	27	28	29	30	31	32

NOTE: THIS WORD IS TRANSMITTED BIT 32 FIRST

TACAN BEARING DATA FORMAT:

PARITY	BEARING STATUS (MSB=90 DEG, LSB=0.0439 DEG)																BEARING SELF-TEST STATUS		BEARING LABEL										
	MSB															LSB													
																	0	0	0	0	0	0	0	0	0	0	0	0	1
1	2	3	4	5	6	7	8	9	10	11	12	13	14	15	16	17	18	19	20	21	22	23	24	25	26	27	28	29	30	31	32

NOTE: THIS WORD IS TRANSMITTED BIT 32 FIRST

17 IF THE TACAN MODE SELECT SWITCH (PNL 07) IS IN "GPC" POSITION, THE TACAN IOM (CHAN 6 IS LOADED VIA GPC CMD DATA XFER (HFE OUTPUT). IF MODE SELECT SWITCH IS IN "T/R" OR "RCV", CHAN 6 IS LOADED WITH DATA BASED UPON CURRENT TACAN CHANNEL SELECT THUMBWHEELS

IF TACAN MODE IS "GPC" AND THERE ARE NO GPC UPDATES (TACAN SOP INACTIVE OR DATA BUS/MDM FAILURE), THE TACAN CARD DEFAULTS TO PREVIOUS (PRIOR TO "GPC" SELECT) CHANNEL SELECT THUMBWHEELS AS THE DATA SOURCE FOR CHAN 6

WHEN TACAN MODE SELECT SWITCH IS IN A NON "GPC" POSITION, THE TACAN IOM ALWAYS SETS CHAN 6, BIT 0 (SYNC BIT) EQUAL TO LOGIC ONE AND BIT 15 (SELF-TEST INITIATE) TO LOGIC ZERO

16 SIO IOM FORMAT (INPUT OR OUTPUT) APPEARING ON THE I/O DATA BUS BETWEEN THE MDM AND THE SHUTTLE SUB-SYSTEM IS 6 TO 12 VDC PEAK-TO-PEAK MANCHESTER II

SYNC	16 DATA BITS																PARITY
1	2	3	4	5	6	7	8	9	10								20
											15	16	17	18	19		

15 THE THREE SIO IOM OUTPUT DISCRETES ARE EACH 3 TO 5 VDC DIFFERENTIAL SIGNALS (LOGIC 1 = +3 TO +5 VDC, LOGIC 0 = -3 TO -5 VDC)

WORD — BRACKETS A SERIAL I/O WORD, INDICATING A 20 BIT DATA TRANSFER TO/FROM THE MDM AND THE SHUTTLE SUBSYSTEM

MSG IN — BRACKETS A SERIAL I/O MESSAGE ALERTING THE SHUTTLE SUBSYSTEM TO SEND A DATA MESSAGE TO THE MDM

MSG OUT — BRACKETS A SERIAL I/O MESSAGE ALERTING THE SHUTTLE SUBSYSTEM TO RECEIVE A DATA MESSAGE FROM THE MDM

WD DISCRETE LINE GOES HI 2 1/2 MICRO-SEC AFTER MSG OUT (IN) DISCRETE GOES HI. START OF SYNC PULSE OCCURS 1 3/4 MICRO-SEC LATER FOR MSG OUT.

WD LINE STAYS HI FOR 25 MICRO-SEC, THEN GOES LO. MSG LINE STAYS HI UNTIL MSG TRANSMISSION COMPLETE

14 SIO IOM BITE IS PREVENTED FROM BEING DETECTED BY THE SHUTTLE SUBSYSTEMS SINCE THE CONTROL DISCRETES 'WORD', 'MESSAGE IN', AND 'MESSAGE OUT' ARE NOT ENABLED DURING SIO BITE TEST

13 SIO IOM BITE TEST PATTERN CONSISTS OF ALTERNATING ONE'S AND ZERO'S

BITE TEST NO.	16-BIT RSP DATA FIELD
1	0 1 0 1 0 1 0 1 0 1 0 1 0 1 0 1
2	1 0 1 0 1 0 1 0 1 0 1 0 1 0 1 0

12 SRB AID IOM INPUT SIGNAL RANGE IS +5.11 TO -5.12 VDC WITH A MAXIMUM FULL-SCALE DIFFERENTIAL VOLTAGE OF 5.12 VDC (LARGER INPUTS INTERPRETED AS FULL SCALE)

AFTER A/D CONVERSION, THE TOTAL ACCURACY OF THE DIGITAL VALUE IS WITHIN 0.5 PCT OF FULL SCALE (25 MV)

NOTE THAT SRB AID IOM ACCEPTS UP TO 32 DIFFERENTIAL INPUT CHANNELS RATHER THAN 16 AS IN THE CASE OF THE ORBITER AID IOM

11 SRB AID IOM'S CONSIST OF THREE ANALOG RECEIVERS PER BUFFER; THE CHAN 15 AND CHAN 31 ANALOG RECEIVERS ARE PHYSICALLY LOCATED ON THE SAME BUFFER MODULE

10 FOR SRB AID IOM BITE TEST, TWO SEPARATE A/D CONVERTED RESPONSE DATA WORDS ARE SENT TO THE GPC:
RSP WORD 1 = ANALOG BITE VALUE + 1/2 (INPUT SIG) + (BITE REF)
RSP WORD 2 = NON-BITE VALUE + INPUT SIGNAL
SRB AID IOM BITE REFERENCE VOLTAGE:
(-)# 4 = 2.0 VDC + BITE REF 1)
(-)# 4 = -2.0 VDC = BITE REF 2)

CH 0 +	CH 4 -	CH 8 -	CH 12 +	CH 16 -	CH 20 +	CH 24 +	CH 28 -
CH 1 -	CH 5 +	CH 9 +	CH 13 -	CH 17 +	CH 21 -	CH 25 -	CH 29 +
CH 2 -	CH 6 +	CH 10 +	CH 14 -	CH 18 +	CH 22 -	CH 26 -	CH 30 +
CH 3 +	CH 7 -	CH 11 -	CH 15 +	CH 19 -	CH 23 +	CH 27 +	CH 31 -

9 SRB AID IOM "AID CNTL" FUNCTIONALLY IDENTICAL TO ORBITER "A15 CNTL" EXCEPT THAT REFERENCE VOLTAGE TO BITE TEST DRIVE LOGIC IS "15" VDC RATHER THAN "12 VDC

8 DIH IOM INPUT SIGNALS OF +28 VDC INTERPRETED AS A LOGIC "ONE", +28 VDC PWR GROUND AS A LOGIC "ZERO" (INPUTS ARE THRESHOLDED AGAINST A +8 VDC REF)

7 DOL IOM GENERATED LOGIC "ONE" STATE IS +5 ±1 VDC, THE LOGIC "ZERO" STATE IS 0 ± 0.5 VDC

6 SELECTED DISCRETES WITHIN A SPECIFIED CHANNEL MAY BE EITHER SET OR RESET SIMULTANEOUSLY, HOWEVER, DISCRETES CANNOT BE BOTH SET AND RESET DURING THE SAME OPERATION (TWO SEPARATE CMD DATA WORDS ARE REQUIRED, BIT 1 (B1) OF THE CHANNEL ADDRESS CONTROLS THE SET/RESET ACTION (1=SET, 0=RESET)

5 THE SRB DOL IOM POSSESSES UNIQUE LOGIC TO PROTECT AGAINST (OR LOCK OUT) CMDS TO THE IOM IN THE EVENT OF GPC OR MDM FAILURES AFTER LAUNCH (SPECIFICALLY PROTECTED ARE APU POWER ON/OFF DISCRETES AND RATE GYRO ON/OFF DISCRETES). NOMINALLY, AT ~T-37 SEC (LL1 & LR1) AND ~T-13 SEC (LL2 & LR2), A CMD IS SENT TO SET THE CHANNEL LOCKOUT LOGIC (ANY NON-BITE CMD WORD WITH A CHAN 7 ADDRESS). NOTE THAT THE GPC SOFTWARE DOES NOT SEND OUTPUT COMMANDS TO THE SRB MDM'S AFTER LAUNCH

THE DOL CMD LOCKOUT LOGIC CAN BE RESET (FOR PRE-LAUNCH OPERATIONS) ONLY BY THE FOLLOWING SEQUENCE:

THE RESET SEQUENCE IS INITIATED VIA A NON-BITE CMD WORD WITH A CHAN 27 ADRS AND A CMD DATA FIELD (BITS B9-B24) OF ALL LOGIC ZEROS (THIS ENABLES DUAL TIME-DELAY TIMERS, ALL OTHER COMMANDS ARE IGNORED (TIMER IS HELD RESET)

A SECOND COMMAND (IDENTICAL TO THE FIRST MUST THEN BE SENT BETWEEN 600 TO 800 MILLISECONDS AFTER THE FIRST CMD IN ORDER TO CLEAR THE CMD LOCKOUT LOGIC (GUARANTEED 200 MILLISEC WINDOW)

IF THE SECOND CMD IS SENT PRIOR TO ~400 MSEC, THE TIMER IS RESET AND THE ENTIRE UNLOCK SEQUENCE MUST BE REPEATED

IF THE SECOND CMD IS SENT AFTER ~1080 MSEC (TIMER HAS RESET ITSELF), THE UNLOCK SEQUENCE MUST BE REPEATED (THE SECOND COMMAND IS INTERPRETED AS THE FIRST COMMAND OF A NEW UNLOCK SEQUENCE)

IF THE SECOND CMD IS SENT BETWEEN EITHER 400-600 MSEC OR 800-1080 MSEC, THE UNLOCK LOGIC MAY OR MAY NOT BE RESET DEPENDING UPON COMPONENT TOLERANCES

4 FOR THE SRB DOL IOM, THE "RESET" SIGNAL TO THE BUS RCVR HYBRID IS GROUNDED (LOGIC ZERO). THIS INHIBITS THE IOM FROM RESPONDING TO PWR-UP/PWR-DOWN IOM RESET COMMANDS FROM AN SCU. PWR-UP/PWR-DOWN INITIALIZATION OF THE SRB DOL OUTPUT DISCRETES IS CONTROLLED ONLY BY THE +10V FAIL DETECTOR CIRCUIT IN THE BUS RECEIVER HYBRID

3 DIL IOM INPUT SIGNAL OF +5VDC INTERPRETED AS A LOGIC "ONE", 0 VDC AS A LOGIC "ZERO". (INPUTS ARE THRESHOLDED AGAINST A +2.25 VDC REF)

2 DIFFERENTIAL AMPLIFIER THRESHOLD VALUES FOR SRB BILEVEL DISCRETE INPUT RECEIVERS SAME AS ORBITER IOM'S (DIL +2.25 VDC; DIH +8.00 VDC)

NOTES: 1 IF BITE TEST SELECTED (BIT 6 = LOGIC 1), BIT 8 CONTROLS WHETHER BITE TEST 1 OR 2 IS EXERCISED. IF B8 = LOGIC 0, D-TYPE FLIP FLOP (D) REGISTER) WILL BE CLOCKED AT TIME SIGNAL "CHV PRES" IS HIGH THUS FORCING Q OUTPUT HIGH (BITE TEST 1 SELECTED) IF B8 = LOGIC 1, "BITE ENABLE" SIGNAL WILL REMAIN LOW DURING TIME THE "CHV PRES" SIGNAL IS HIGH AND THE D-TYPE FLIP FLOP WILL NOT BE CLOCKED; THUS, Q=NOT OUTPUT REMAINS HIGH (BITE TEST 2 SELECTED)

IF BILEVEL DISCRETE SIGNALS ARE PRESENT WHEN SRB MDM IS POWERED UP, THE FIRST RESPONSE WORD FROM A SRB DIL OR DIH TYPE IOM MAY BE ERRONEOUS DUE TO BITE TEST BITS PASSING INPUT DATA. THEREAFTER, BITE LOGIC LATCH-UP IS CLEARED AND NORMAL IOM OPERATION FOLLOWS (AFFECTS PRELAUNCH ONLY)

13 EMDM 4

SIGNATURE		DATE	NATIONAL AERONAUTICS AND SPACE ADMINISTRATION LYNDON B. JOHNSON SPACE CENTER HOUSTON, TEXAS
DSGN V. ORTIZ		8/10/78	
DR V. ORTIZ			ENHANCED MULTIPLEXER/ DEMULTIPLEXER
ENGR KATHY AKAGI			
ENGR			
APP		2-9-93	
APP			SPACE SHUTTLE
OMNIPLAN			ALL
LTR E	PCN 2		126.5 X 34

DWG NO 8.13

PAGE SHEET 4 OF 4

BASIC REV E-2

SERIAL INPUT/OUTPUT (SIO) IOM (DIGITAL)

MANCHESTER ENCODER

SD XMIT MUX

SD GENERATOR

SD CONVERTER

HI CLK RCVR

SD CHANNEL DECODER

SD CNTL

SCU/IOM INTERFACE

SD DE-SKEW

SD RCVR DECODER

MANCHESTER DECODER

PARITY LINE RCVR

POWER SUPPLY

SRB DISCRETE OUTPUT LOW (DOL) IOM (5VDC)

DOL CNTL 2

DOL CNTL 3

BILEVEL DISCRETE OUTPUT DRVRS

SRB DISCRETE INPUT HIGH (DIH) IOM (28VDC)

SRB ANALOG INPUT DIFFERENTIAL (AID) IO

SRB DISCRETE INPUT LOW (DIL) IOM (5VDC)

DATE: 02-07-93 | NAME: SKK | VERSION: INK 1

W V U T S R Q P O N

8 7 6 5 4 3 2 1

INPUT IOM CMD FORMAT (FROM SCU)

CHAN ADRS			IOM TASK				CHECK BITS	
B1	B2	B3	B4	B5	B6	B7	B8	B9	B10

OUTPUT IOM CMD FORMATS (FROM SCU)

CHAN ADRS			IOM TASK				16 DATA BITS				CHECK BITS		
B1	B2	B3	B4	B5	B6	B7	B8	B9	B24	B25	B26		

CHAN ADRS			IOM TASK				CHECK BITS	
B1	B2	B3	B4	B5	B6	B7	B8	B9	B10

IOM RESPONSE DATA WORD FORMAT (TO SCU)

16 DATA BITS												CHECK BITS		
B1	B2	B3	B4	B5					B15	B16	B17	B18		

IOM TASKS:
- 000 - RSP DATA REQUEST (INPUT IOM'S)
- 001 - CMD DATA TRANSFER (OUTPUT IOM'S)
- 01X - RESET IOM
- 1X0 - BITE TEST 1
- 1X1 - BITE TEST 2

CHECK BITS:
- 01 - EXECUTE CMD
- OTHER - ILLEGAL CODE (TERMINATES CMD)

SRB DISCRETE INPUT LOW (DIL) IOM (5VDC)

SRB DISCRETE INPUT HIGH (DIH) IOM (28VDC)

SRB DISCRETE OUTPUT LOW (DOL) IOM (5VDC)

SRB IOM PWR SUPPLY (IOM 7)
SRB IOM PWR SUPPLY (IOM 4)
SRB IOM PWR SUPPLY (IOM 2)
SRB IOM PWR SUPPLY (IOM 0)

SRB IOM PS (TYPICAL) IOM 0 PS

BASIC REV E-2

FOR DETAILED COMPONENT AND LOGIC INFORMATION REFER TO:

SSSH DWG NO.	SSSH DWG TITLE	VENDOR NAME	VENDOR DWG NO.	VENDOR SHEET NO.	REV	DATE	VENDOR DRAWING TITLE
8.1	COMPUTER INPUT/OUTPUT FUNCTION	ROCKWELL	VS70-720222	1-4	J	6/2/85	SCHEMATIC DIAGRAM - COMPUTER POWER AND CONTROLS SUBSYSTEM
			VS70-720239	1-5	B	9/15/88	COMPUTER SYNCHRONIZATION AND FAILS STATUS
			VS70-733262	1-5	H	6/16/85	D & C PANEL 06 OVERHEAD CONSOLE
			VS70-720242	1-8	B	7/21/80	SCHEMATIC DIAGRAM - COMPUTER DATA BUS SUBSYSTEM INTERFACE
8.2	BACKUP FLIGHT CONTROLLER	ROCKWELL	15180507	1	-	-	BACKUP FLIGHT CONTROLLER BOARD
			15180507	2	-	-	BACKUP FLIGHT CONTROLLER BOARD
			15180507	3	-	-	BACKUP FLIGHT CONTROLLER BOARD
			VS70-720269	1-6	E	9/16/88	SCHEMATIC DIAGRAM BACKUP FLIGHT CONTROL COMPUTER INTERFACE
			VS70-971102	115-120	D	9/85	INTEGRATED SYSTEM SCHEMATICS OV102 GNC & DPS
8.5	MASS MEMORY	ODETICS	4410394	1	-	7/76	INTERCONNECT DIAGRAM
			4410395	1	-	7/76	STANDBY ELECTRONICS POWER SUPPLY
			4410396	1	-	7/76	SERVO PREREGULATOR
			4410397	1	-	7/76	CONTROLLER READ/WRITE ELECTRONICS
			4410397	2	-	7/76	CONTROLLER READ/WRITE ELECTRONICS
			4410397	3	-	7/76	CONTROLLER READ/WRITE ELECTRONICS
			4410397	4	-	7/76	CONTROLLER READ/WRITE ELECTRONICS
			4410397	5	-	7/76	CONTROLLER READ/WRITE ELECTRONICS
			4410397	6	-	7/76	CONTROLLER READ/WRITE ELECTRONICS
			4410397	7	-	7/76	CONTROLLER READ/WRITE ELECTRONICS
			4410397	8	-	7/76	CONTROLLER READ/WRITE ELECTRONICS
			4410431	1	B	5/76	TACH PREAMP/DRIVER
			4410436	1	-	2/75	READ TRACK SELECT, PREAMPLIFIER
			4410446	1	B	6/76	WRITE HEAD DRIVER
			4410451	1	G	6/76	ANALOG READ ELECTRONICS
			4410481	1	A	5/76	CONTROLLER STATUS CONDITIONING/STANDBY POWER REGULATOR
			4410486	1	A	6/76	MIA ADAPTER
			4410516	1	B	7/76	INTERCONNECT AND POWER DISTRIBUTION ELECTRONICS
		ROCKWELL	VS70-720589	1	-	11/80	SCHEMATIC DIAGRAM DATA BUS MMU 1 & MMU 2
			VS70-720582	1	B	3/78	SCHEM DIA DATA BUS MMU 1 & 2
			VS70-720212	1-2	E	6/85	SCHEMATIC DIAGRAM MMU & COMPUTER INTERFACE
			VS70-720219	1-2	A	8/88	SCHEMATIC DIAGRAM MMU & COMPUTER INTERFACE

DWG	SIGNATURE	DATE	DWG	SIGNATURE	DATE
8.1	ENGR R. HUDSON			ENGR	
	ENGR R. Hudson	9-22-94		ENGR	
8.2	ENGR J. HILL			ENGR	
	ENGR J. B. Hill	9-22-94		ENGR	
8.5	ENGR T. KEELER			APP Robert E. Lloyd	9-27-94
	ENGR Terry W. Keeler	22 Sept 94		APP	
	ENGR			APP	
	ENGR			LTR E PCN 4	

NATIONAL AERONAUTICS AND SPACE ADMINISTRATION
LYNDON B. JOHNSON SPACE CENTER HOUSTON, TEXAS

VENDOR DRAWING REFERENCES

SPACE SHUTTLE | TBL NO 8-I

ALL

BASIC REV E-4

FOR DETAILED COMPONENT AND LOGIC INFORMATION REFER TO:

SSSH DWG NO.	SSSH DWG TITLE	VENDOR NAME	VENDOR DWG NO.	VENDOR SHEET NO.	REV	DATE	VENDOR DRAWING TITLE
8.6	MULTIFUNCTION CRT DISPLAY SYSTEM	IBM	6239700	1	K	11/85	KEYBOARD UNIT
			6239700	2	B	1/76	KEYBOARD UNIT
			6239700	3	C	3/76	KEYBOARD UNIT
			6239704	1	A	4/76	KEYBOARD UNIT ELECTRICAL SCHEMATIC
			6239704	2	A	4/76	KEYBOARD UNIT ELECTRICAL SCHEMATIC
			6239704	3	A	4/76	KEYBOARD UNIT ELECTRICAL SCHEMATIC
			6239704	4	-	6/75	KEYBOARD UNIT ELECTRICAL SCHEMATIC
			6239269	1-23	A	1/76	LOGIC DIAGRAM FOR A01 BACKPANEL
			6239289	1-15	-	6/75	LOGIC DIAGRAM FOR A07A, SMCM
			6239299	1-15	A	1/76	LOGIC DIAGRAM FOR A07B, SMCM
			6239329	1-22	A	1/76	LOGIC DIAGRAM FOR A03A, MIA ADAPTER
			6239339	1-20	A	1/76	LOGIC DIAGRAM FOR A03B INITIALIZES
			6239349	1-12	A	1/76	LOGIC DIAGRAM FOR A04A KEYBOARD ADAPTER A
			6239359	1-12	A	1/76	LOGIC DIAGRAM FOR A04B KEYBOARD ADAPTER B
			6239369	1-22	A	1/76	LOGIC DIAGRAM FOR A05A, SPO CPU
			6239379	1-23	A	1/76	LOGIC DIAGRAM FOR A05B, SPO CPU
			6239389	1-20	A	1/76	LOGIC DIAGRAM FOR A06A DRIVERS
			6239399	1-20	A	1/76	LOGIC DIAGRAM OR A06B
			6239409	1-22	A	1/76	LOGIC DIAGRAM OR A11A CHAR GEN
			6239419	1-27	A	1/76	LOGIC DIAGRAM FOR A11B POSITION & TYPE
			6239429	1-22	A	1/76	LOGIC DIAGRAM FOR A12A, REQ & VIDEO
			6239439	1-20	A	1/76	LOGIC DIAGRAM FOR A12B TIMING & ADD
			6239449	1-20	A	1/76	LOGIC DIAGRAM FOR A13A CIRCLES & VECTORS
			6239459	1-22	A	1/76	LOGIC DIAGRAM FOR A13B MODE & ROTATION
			6239469	1-19	A	1/76	LOGIC DIAGRAM FOR A14A, TRANSLATE & STATUS
			6239479	1-5	A	1/76	LOGIC DIAGRAM FOR A14B, STATUS I/O
			6239489	1-26	A	1/76	LOGIC DIAGRAM FOR A15A, BIT WRAP
			6239499	1-14	-	6/75	LOGIC DIAGRAM
			6239509	1-6	A	1/76	LOGIC DIAGRAM FOR A17A
			6239519	1-5	-	6/75	LOGIC DIAGRAM FOR A17B
			6239529	1-5	-	6/75	LOGIC DIAGRAM FOR A18A
			6239539	1-5	-	6/75	LOGIC DIAGRAM FOR A18B
			6239549	1-6	-	6/75	LOGIC DIAGRAM FOR A19A
			6239559	1-6	-	6/75	LOGIC DIAGRAM FOR OUTPUT MUX
			6239569	1-5	A	5/75	CONNECTIONS X-Y DEFLECT
			6239579	1-5	A	5/75	CONNECTIONS OVERSCAN
			1244-00340	-	-	-	DEFLECTION AMPLIFIER ASSEMBLY SCHEMATIC

DWG	SIGNATURE	DATE	DWG	SIGNATURE	DATE
8.6	ENGR G. ARAIZA YOUNG			ENGR	
	ENGR D. Araiza Young	9/22/94		ENGR	
	ENGR			ENGR	
	ENGR			ENGR	
	ENGR			APP Robert E. Hoyt	9-27-94
	ENGR			APP	
	ENGR			APP	
	ENGR			LTR E PCN 4	

NATIONAL AERONAUTICS AND SPACE ADMINISTRATION
LYNDON B. JOHNSON SPACE CENTER HOUSTON, TEXAS

VENDOR DRAWING REFERENCES

SPACE SHUTTLE	TBL NO 8-I
ALL	
	PAGE 8.I-2 SHEET 2 OF 8

BASIC REV E-4

FOR DETAILED COMPONENT AND LOGIC INFORMATION REFER TO:

SSSH DWG NO.	SSSH DWG TITLE	VENDOR NAME	VENDOR DWG NO.	VENDOR SHEET NO.	REV	DATE	VENDOR DRAWING TITLE
8.6 CONT	MULTIFUNCTION CRT DISPLAY SYSTEM	ROCKWELL	VS70-730109	1-7	D	8/85	SCHEMATICS DIAG - DISPLAY & CONTROLS
			VS70-720579	1-3	A	10/13/88	DP&S DATA BUSES
		NORDEN	1244-00031	1	F		ORBITER DISPLAY BIT CIRCUIT SCHEMATIC
			1244-00141	1	A	/75	ORBITER DISPLAY LVPS
			1244-00213	1	-	/75	VOLTAGE CONTROL REGULATOR & PHOSPHER PROTECTION
			1244-00239	1	B	/75	ORBITER DISPLAY UNIT VIDEO AMPLIFIER SCHEMATIC
			1244-00244	1	-	/75	ORBITER DISPLAY UNIT WIRING SCHEMATIC
			1244-00244	2	-	/75	ORBITER DISPLAY UNIT WIRING SCHEMATIC
			1244-00253	1	-	4/76	ORBITER DEFLECTION AMPLIFIER SCHEMATIC
8.7-1	DPS PWR 1	ROCKWELL	VS70-720209	1,2	B	4/87	SCHEMATIC DIAGRAM - DATA PROC & SOFTWARE, FLT CONT MDM PWR & CONT
			VS70-720219	1	B	11/88	SCHEMATIC DIAGRAM - MASS MEMORY & COMPUTER INTERFACE SUBSYSTEM
			VS70-720229	1,3	D	9/88	SCHEMATIC DIAGRAM - COMPUTER POWER AND CONTROLS SUBSYSTEM
			VS70-720269	1, 2, 5	E	9/88	SCHEMATIC DIAGRAM BACKUP FLT CONT COMPUTER INTERFACE
			VS70-730109	1,2	D	8/85	SCHEMATIC DIAGRAM - DISPLAYS AND CONTROLS
			VS70-730159	1	-	4/80	SCHEMATIC DIAGRAM - TIMERS SUBSYSTEM
			VS70-733519	1	A	9/84	SCHEMATIC DIAGRAM PANEL F6A5
			VS70-750139	2,3	M	12/87	SCHEMATIC DIAGRAM - MASTER TIMING UNIT
			VS70-750209	2,3	K	6/88	SCHEMATIC DIAGRAM - OI POWER AND CONTROL
			VS70-760503	9	B	4/88	SCHEMATIC DIAGRAM - EVCON SUBSYSTEM
			VS70-948099	6,7	A	10/87	INTEGRATED SCHEMATIC DRAWINGS - SOLID ROCKET BOOSTERS
8.7-1	DPS PWR 2		VS70-720229	1,3	D	8/88	SCHEMATIC DIAGRAM - COMPUTER POWER AND CONTROLS SUBSYSTEM
			VS70-720239	2	A	5/81	SCHEMATIC DIAGRAM - COMPUTER SYNCHRONIZATION AND FAIL STATUS
			VS70-720269	1, 2, 5	E	8/88	SCHEMATIC DIAGRAM - BACKUP FLT CONT COMPUTER INTERFACE
			VS70-750209	2, 3	K	6/88	SCHEMATIC DIAGRAM - OI POWER AND CONTROL
8.7-3	DPS PWR 3		VS70-720209	1,2	B	4/87	SCHEMATIC DIAGRAM - DATA PROC & SOFTWARE, FLT CONT MDM PWR & CONT
			VS70-720219	1	B	11/88	SCHEMATIC DIAGRAM - MASS MEMORY & COMPUTER INTERFACE SUBSYSTEM
			VS70-720229	1, 3	D	8/88	SCHEMATIC DIAGRAM - COMPUTER POWER AND CONTROLS SUBSYSTEM
			VS70-720269	1, 2, 5	E	8/88	SCHEMATIC DIAGRAM - BACKUP FLT CONT COMPUTER INTERFACE
			VS70-730109	1, 2	D	8/85	SCHEMATIC DIAGRAM - DISPLAYS AND CONTROLS
			VS70-760503	9	B	4/88	SCHEMATIC DIAGRAM - EVCON SUBSYSTEM

DWG	SIGNATURE	DATE	DWG	SIGNATURE	DATE
8.6	ENGR G. ARAIZA YOUNG			ENGR	
	ENGR D. Araiza Young	9/22/94		ENGR	
8.7-1,2,3	ENGR R. WALTON			ENGR	
	ENGR Robert J. Walton	9/22/94		ENGR	
	ENGR			APP Robert F. Lloyd	9-27-94
	ENGR			APP	
	ENGR			APP	
	ENGR			LTR E PCN 4	

NATIONAL AERONAUTICS AND SPACE ADMINISTRATION
LYNDON B. JOHNSON SPACE CENTER HOUSTON, TEXAS

VENDOR DRAWING REFERENCES

SPACE SHUTTLE ALL | TBL NO 8-I | PAGE 8.I-3 | SHEET 3 OF 8

BASIC REV E-4

FOR DETAILED COMPONENT AND LOGIC INFORMATION REFER TO:

SSSH DWG NO.	SSSH DWG TITLE	VENDOR NAME	VENDOR DWG NO.	VENDOR SHEET NO.	REV	DATE	VENDOR DRAWING TITLE	
8.8	MULTIPLEXER/ DEMULTIPLEXER	ROCKWELL	VS70-720202	1-3	E, EO-E01	7/90	SCHEMATIC DIAGRAM - DATA PROCESSING & SOFTWARE, FLT CONT MDM POWER & CONTROL	
			VS70-720209	1-3	D, EO-D01	11/93	SCHEMATIC DIAGRAM - DATA PROCESSING & SOFTWARE, FLT CONT MDM POWER & CONTROL	
			VS72-948102	6-7,56-57	C, EO-D17	4/89	INTEGRATED SYS SCHEMATIC SOLID ROCKET BOOSTER	
			VS72-948099	6-7,56-57	N/C, EO-A17	6/92	INTEGRATED SYS SCHEMATIC SOLID ROCKET BOOSTER	
		SINGER/ KEARFOTT	Y214A367-01	1	A	4/75	SERIAL MIA	
			Y215A030-02	1	B	2/75	SMIA CONTROL / TIMING HYBRID	
			Y215A032-01	1-2	A	9/74	SMIA XMTR / RCVR HYBRID	
			Y215A193-01	1-4	-	1/75	SMIA LSI MICROCIRCUIT HYBRID	
		HONEYWELL	4027158-902	1-2	A	4/77	MDM MIA INTERFACE MODULE	SRB
			4027159-901	1-5	-	12/75	MDM SCU MODULE	SRB
			4027160-902	1-5	-	5/77	MDM IOM PWR SUPPLY MODULE	SRB
			4027161-901	1-2	-	12/75	MDM A/D CONVERTER MODULE	SRB
			4027162-901	1-7	-	12/75	MDM I/O MODULE (SRB AID)	SRB
			4027341-901	1-3	-	12/75	MDM I/O MODULE (SRB DIH)	SRB
			4027342-901	1-5	-	12/75	MDM I/O MODULE (SRB DIL)	SRB
			4027343-902	1-5	-	9/77	MDM I/O MODULE (SRB DOL)	SRB
			4028012-902	1-4	-	5/77	MDM CORE PWR SUPPLY	SRB
			4022684-901	1-20	A	3/76	MDM SCU MODULE	"5XXX" SERIES ①
			4022685-901	1-7	-	1/75	MDM CORE PWR SUPPLY	"5XXX" SERIES ①
			4022686-901	1-9	B	12/75	MDM A/D CONVERTER MODULE	"5XXX" SERIES ①
			4022687-901	1-8	A	9/76	MDM I/O MODULE (AID)	"5XXX" SERIES ①
			4022688-901	1-9	A	2/76	MDM I/O MODULE (AIS)	"5XXX" SERIES ①
			4022689-901	1-7	-	7/75	MDM I/O MODULE (DIL)	"5XXX" SERIES ①
			4022690-901	1-8	-	5/75	MDM I/O MODULE (DIH)	"5XXX" SERIES ①
			4022691-901	1-9	-	5/75	MDM I/O MODULE (DOL)	"5XXX" SERIES ①
			4022692-901	1-10	A	8/75	MDM I/O MODULE (DOH)	"5XXX" SERIES ①
			4022693-901	1-9	A	11/75	MDM I/O MODULE (AOD)	"5XXX" SERIES ①
			4022694-901	1-17	A	3/76	MDM I/O MODULE (SIO)	"5XXX" SERIES ①
			4022695-801	1-16	-	7/75	MDM I/O MODULE (TAC)	"5XXX" SERIES ①
			4022696-901	1-8	A	10/75	MDM MIA INTERFACE MODULE	"5XXX" SERIES ①
			4024876-913	1-7	-	7/75	MDM IOM PWR SUPPLY MODULE (IOM 0-7)	"5XXX" SERIES ①
			4024876-914	1-5	-	7/75	MDM IOM PWR SUPPLY MODULE (IOM 8-15)	"5XXX" SERIES ①

NOTES

① "5XXX" SERIES MDM'S DEVELOPED FOR ORBITER VEHICLE OV-102 (DDT&E MDM): DESIGN, DEVELOPMENT, TEST, AND EVALUATION VERSION. DUE TO LIMITED SPARES, THESE MDM'S MAY BE FLOWN ON ANY ORBITER VEHICLE.

DWG	SIGNATURE		DATE
8.8	ENGR JAMES HILL		
	ENGR J. B. Hill		9-22-94
	ENGR		
	ENGR		
	APP Robert S. Lloyd		9-27-94
	APP		
	APP		
	LTR E	PCN 4	

NATIONAL AERONAUTICS AND SPACE ADMINISTRATION
LYNDON B. JOHNSON SPACE CENTER HOUSTON, TEXAS

VENDOR DRAWING REFERENCES

SPACE SHUTTLE | TBL NO 8-I
ALL

BASIC REV E-4

FOR DETAILED COMPONENT AND LOGIC INFORMATION REFER TO:

SSSH DWG NO.	SSSH DWG TITLE	VENDOR NAME	VENDOR DWG NO.	VENDOR SHEET NO.	REV	DATE	VENDOR DRAWING TITLE
8.8 CONT	MULTIPLEXER/ DEMULTIPLEXER	HONEYWELL	4022684-902	1-20	-	5/80	MDM SCU MODULE "6XXX" SERIES ②
			4022685-903	1-8	A	1/83	MDM CORE PWR SUPPLY "6XXX" SERIES ②
			4022686-902	1-8	-	5/80	MDM A/D CONVERTER MODULE "6XXX" SERIES ②
			4022687-902	1-8	-	5/80	MDM I/O MODULE (AID) "6XXX" SERIES ②
			4022688-902	1-9	-	5/80	MDM I/O MODULE (AIS) "6XXX" SERIES ②
			4022689-902	1-7	-	5/80	MDM I/O MODULE (DIL) "6XXX" SERIES ②
			4022690-902	1-8	-	5/80	MDM I/O MODULE (DIH) "6XXX" SERIES ②
			4022691-902	1-9	-	5/80	MDM I/O MODULE (DOL) "6XXX" SERIES ②
			4022692-902	1-10	-	5/80	MDM I/O MODULE (DOH) "6XXX" SERIES ②
			4022693-902	1-9	-	5/80	MDM I/O MODULE (AOD) "6XXX" SERIES ②
			4022694-902	1-17	-	5/80	MDM I/O MODULE (SIO) "6XXX" SERIES ②
			4022695-903	1-16	-	5/80	MDM I/O MODULE (TAC) "6XXX" SERIES ②
			4022696-902	1-8	A	3/79	MDM MIA INTERFACE MODULE "6XXX" SERIES ②
			4024876-951	1-7	-	4/80	FF MDM IOM PWR SUPPLY MODULE (IOM 0-7) "6XXX" SERIES ②
			4024876-952	1-7	-	4/80	FF MDM IOM PWR SUPPLY MODULE (IOM 8-15) "6XXX" SERIES ②
			4024876-953	1-6	-	4/80	FA MDM I0M PWR SUPPLY MODULE "6XXX" SERIES ②
			4024876-954	1-6	-	4/80	FA MDM I0M PWR SUPPLY MODULE "6XXX" SERIES ②
			4024876-955	1-5	-	4/80	OF1-3 MDM I0M PWR SUPPLY MODULE "6XXX" SERIES ②
			4024876-956	1-5	-	4/80	OF1-3 MDM I0M PWR SUPPLY MODULE "6XXX" SERIES ②
			4024876-957	1-5	-	4/80	OA MDM I0M PWR SUPPLY MODULE "6XXX" SERIES ②
			4024876-958	1-5	-	4/80	OA MDM I0M PWR SUPPLY MODULE "6XXX" SERIES ②
			4024876-959	1-5	-	4/80	OF4 MDM I0M PWR SUPPLY MODULE "6XXX" SERIES ②
			4024876-960	1-5	-	4/80	OF4 MDM I0M PWR SUPPLY MODULE "6XXX" SERIES ②
			4024876-961	1-6	-	4/80	LF/LA MDM I0M PWR SUPPLY MODULE "6XXX" SERIES ②
			4024876-962	1-6	-	4/80	LF/LA MDM I0M PWR SUPPLY MODULE "6XXX" SERIES ②
			4024876-963	1-7	-	4/80	PF MDM I0M PWR SUPPLY MODULE "6XXX" SERIES ②
			4024876-964	1-6	-	4/80	PF MDM I0M PWR SUPPLY MODULE "6XXX" SERIES ②

NOTES

② "6XXX" SERIES MDM'S DEVELOPED FOR POST OV-102 ORBITERS (INCR III MDM): INCREMENT III VERSION. DUE TO LIMITED SPARES, THESE MDM'S MAY BE FLOWN ON ANY ORBITER VEHICLE.

DWG	SIGNATURE		DATE
8.8	ENGR	JAMES HILL	
	ENGR	J.B. Hill	9-22-94
	ENGR		
	ENGR		
	APP	Kurt E. Floyd	9-27-94
	APP		
	APP		
	LTR E	PCN 4	

NATIONAL AERONAUTICS AND SPACE ADMINISTRATION
LYNDON B. JOHNSON SPACE CENTER HOUSTON, TEXAS

VENDOR DRAWING REFERENCES

SPACE SHUTTLE	TBL NO 8-I
ALL	
	PAGE 8.I-5 SHEET 5 OF 8

BASIC REV E-4

FOR DETAILED COMPONENT AND LOGIC INFORMATION REFER TO:

SSSH DWG NO.	SSSH DWG TITLE	VENDOR NAME	VENDOR DWG NO.	VENDOR SHEET NO.	REV	DATE	VENDOR DRAWING TITLE
8.9	MASTER TIMING UNIT	ROCKWELL	VS70-750139	-	M	12/87	SCHEMATIC DIAGRAM MASTER TIMING UNIT
		WESTINGHOUSE	9RD5137	1-10	E	12/75	MISCELLANEOUS BOARD
			9RD4938	1-3	A	12/75	MOTHERBOARD CONNECTORS
			9RD4940	1	A	12/75	MTU POWER SUPPLY CHASSIS
			9RD4939	1	B	12/75	MTU POWER SUPPLY BOARD
			9RD5133	1-6	C	7/75	ACCUMULATOR BOARD
			9RD5135	1-9	H	12/75	UPDATE BOARD
			9RD5134	1-9	F	12/75	FREQUENCY DIVIDER BOARD
			9RD5136	1-12	F	12/75	VOTED DEMAND BOARD
8.10	TIMERS	CONRAC	7904607	1	A	2/76	EVENT TIMER INTERCONNECTION DIA
			7904586	1-3	D	11/75	LOGIC DIAGRAM, INTERNAL CIRCUIT HYBRID CONDITIONING
			7904630	1	A	2/76	SCHEMATIC DIAGRAM, POWER SUPPLY
			7904638	1-2	A	2/76	MISSION TIMER INTERCONNECTION DIAGRAM
			7904662	1-3	B	10/75	LOGIC DIAGRAM, INTERNAL CIRCUIT HYBRID CONDITIONING
			7904582	1-2	A	8/75	LOGIC DIAGRAM INTERNAL CIRCUIT HYBRID DIRECT CURRENT READOUT
8.11	PANEL 06 GPC SWITCHES	RI	ME452-0102	9 of 13	K	12/87	TOGGLE SWITCH 3 POLE
		RI	VS70-720229	1, 2, 3 of 4	D	8/24/88	SCHEMATIC DIAGRAM - COMPUTER PWR & CONTROLS SUBSYSTEM
		RI	VS70-720269	1, 5 of 6	D	4/11/83	SCHEMATIC DIAGRAM - BACKUP FLT CONT COMPUTER INTERFACE (SUBSYSTEM)
		RI	VS70-971099	146	N/C	EO/A12 5/8/87	COMPUTER POWER & CONTROLS GPC-1
				147	-	-	COMPUTER POWER & CONTROLS GPC-2
				148	-	-	COMPUTER POWER & CONTROLS GPC-3
				149	-	-	COMPUTER POWER & CONTROLS GPC-4
				150	-	-	COMPUTER POWER & CONTROLS GPC-5
8.12	AP101S GENERAL PURPOSE COMPUTER	IBM	M7793/2-003	-	-	N/A	METER, TIME TOTAL
			106A250-1	E003A062	-	2/26/86	PRINTED WIRING BOARD (PWB), MULTILAYER, A SIDE
			106A260-1	E3A76	A	4/6/87	PWB, MULTILAYER
			106A270-1	E3A70	-	3/4/86	PWB, MULTILAYER, A SIDE
			106A280-1	E3A73	-	3/4/86	PWB, MULTILAYER, B SIDE
			106A290-1	E3A71	A	4/6/87	PWB, MULTILAYER, MIB
			106A300-1	E3A57	-	3/14/86	PWB, MULTILAYER, A SIDE
			106A310-1	E3A60	-	3/4/86	PWB, MULTILAYER, MIB
			106A320-1	E26A114	-	8/19/86	PWB, MULTILAYER
			106A860-1	E3A58	-	8/25/86	PWB, MULTILAYER, A SIDE
			106A870-1	E3A70	A	4/6/87	PWB, MULTILAYER
			106A880-1	E3A65	-	3/14/86	PWB-A SIDE
			106A890-1	E3A72	-	3/14/86	PWB-B SIDE
			106A900-1	E3A69	-	3/14/86	PWB-A SIDE
			106A910-1	E3A67	-	3/14/86	PWB-B SIDE
			106A920-1	E3A65	A	4/6/87	PWB, MULTILAYER
			106A930-1	E3A66	-	3/21/86	PWB, MULTILAYER
			106A940-1	E3A64	-	3/21/86	PWB, MULTILAYER
			106A950-1	E3A58	-	3/27/86	PWB, MULTILAYER, A SIDE
			106A960-1	E3A70	-	3/27/86	PWB, MULTILAYER, B SIDE
			106A970-1	E3A53	-	6/30/86	PWB, LAYER 9 & 10
			106A980	E3A60	-	6/3/86	PWB, MULTILAYER, B SIDE
			116A783-11	B3	B	8/15/90	CONNECTOR
			116A783-12	B3	B	8/15/90	CONNECTOR
			116A783-13	B3	B	8/15/90	CONNECTOR
			116A783-14	B3	B	8/15/90	CONNECTOR
			116A783-15	B3	B	8/15/90	CONNECTOR
			116A783-16	B3	B	8/15/90	CONNECTOR
			116A783-2	B3	B	8/15/90	CONNECTOR
			116A783-22	B3	B	8/15/90	CONNECTOR
			116A783-4	B3	B	8/15/90	CONNECTOR
			116A783-5	B3	B	8/15/90	CONNECTOR
			116A783-7	B3	B	8/15/90	CONNECTOR
			116A783-8	B3	B	8/15/90	CONNECTOR
			116A783-9	B3	B	8/15/90	CONNECTOR
			121A570	E3A67	A	8/22/88	PWB, MULTILAYER
			6953076-1	-	A	11/29/83	INTERRUPT PAGE - FRAME
			6953166-1	A1E1	A	11/29/83	CPU 1 PAGE - FRAME

DWG	SIGNATURE	DATE	DWG	SIGNATURE	DATE
8.9	ENGR GARY SHAM			ENGR	
	ENGR	9-26-94		ENGR	
8.10	ENGR M. LaFLEUR			ENGR	
	ENGR			ENGR	
8.11	ENGR R. WALTON			APP	9-27-94
	ENGR	9/22/94		APP	
8.12	ENGR K. TERRY			APP	
	ENGR	9-26-94		LTR E PCN 4	

NATIONAL AERONAUTICS AND SPACE ADMINISTRATION
LYNDON B. JOHNSON SPACE CENTER HOUSTON, TEXAS

VENDOR DRAWING REFERENCES

SPACE SHUTTLE | TBL NO 8-I
ALL

BASIC REV E-4

FOR DETAILED COMPONENT AND LOGIC INFORMATION REFER TO:

SSSH DWG NO.	SSSH DWG TITLE	VENDOR NAME	VENDOR DWG NO.	VENDOR SHEET NO.	REV	DATE	VENDOR DRAWING TITLE
8.12 CONT			6953196-1	A1E1	A	11/29/83	CPU 2 PAGE - FRAME
			6953226	A1E1	A	11/29/83	CPU 3 PAGE - FRAME
			6959260-1	E3A72	E	9/11/92	PWB, MULTILAYER
			6964170-1	E3A71	A	10/10/91	PWB, MULTILAYER
			6966000-23	A032E003	R	8/5/91	GENERAL PURPOSE COMPUTER
			6966005-2	E2	C	1/5/88	RH CHASSIS
			6966006-2	E2	C	1/5/88	LH CHASSIS
			6966007-1	A1E2	B	9/18/87	REAR PLENUM ASSEMBLY
			6966008-1	A2E1	D	9/21/90	COVER, HEAT EXCHANGER
			6966009-2	A2E1	B	7/1/87	TOP COVER ASSEMBLY
			6966010-2	A2E2	D	4/12/88	BOTTOM COVER ASSEMBLY
			6966011-1	E3	C	6/9/86	FRONT PANEL ASSEMBLY
			6966012-2	A3E1A31	J	9/27/88	HARNESS ASSEMBLY
			6966013-2	D1	B	3/5/87	CONNECTOR, ALTERED
			6966015-20	A8E2A45	M	4/22/88	ELECTRICAL CONNECTION PANEL ASSEMBLY
			6966016-1	E1	A	5/9/85	SUPPORT PLATE
			6966022-21	A15E2A12	H	7/22/91	AD PAGE-PAGE ASSEMBLY
			6966023-1	E1	-	6/5/86	AD PAGE-FRAME
			6966025-20	A6E3A8	G	2/15/91	MIA PAGE-PAGE ASSEMBLY
			6966026-1	E1	-	8/16/84	MIA PAGE-FRAME
			6966030-21	A40E3A118	R	3/1/91	MICROSEQ/CONTROL PAGE-PAGE ASSEMBLY
			6966031-1	E1	-	6/28/84	MICROSEQ/CONTROL PAGE-FRAME
			6966035-20	A6E2A20	G	12/19/88	I/O BUFFER PAGE-PAGE ASSEMBLY
			6966040-21	A24E3A151	N	2/15/91	STATUS/INTERRUPT PAGE-PAGE ASSEMBLY
			6966045-20	A10E2A53	H	12/19/88	FLOW BOTTOM PAGE-PAGE ASSEMBLY
			6966050-20	A10E2A28	H	2/15/91	FLOW TOP PAGE-PAGE ASSEMBLY
			6966051-1	E1	A	8/1/84	FLOW TOP PAGE-FRAME
			6966055-20	A6E2A23	L	2/15/91	INTERFACE/MIA CONTROL PAGE-PAGE ASSEMBLY
			6966064-20	A5E3A9	K	2/15/91	CPU 1 PAGE-PAGE ASSEMBLY
			6966065-21	A40E3A93	R	2/15/91	INTERRUPT PAGE-PAGE ASSEMBLY
			6966066-21	A22E3A117	N	5/23/91	MMU 2 PAGE-PAGE ASSEMBLY
			6966067-21	A14E3A26	K	2/15/91	MMU 1 PAGE-PAGE ASSEMBLY
			6966068-21	A20E3A18	J	2/15/91	CPU 3 PAGE-PAGE ASSEMBLY
			6966069-20	A16E3A19	E	2/15/91	CPU 2 PAGE-PAGE ASSEMBLY
			6966070-22	A12E3A2	H	10/31/88	CMOS PAGE-PAGE ASSEMBLY
			6966070-23	A12E3A2	H	10/31/88	CMOS PAGE-PAGE ASSEMBLY
			6966072-1	E1	-	4/23/85	CMOS PAGE-FRAME-A SIDE
			6966073-22	A4E2	J	4/4/89	CMOS MEMORY SUBASSEMBLY B
			6966073-23	A4E2	J	4/4/89	CMOS MEMORY SUBASSEMBLY B
			6966074-1	E1	A	4/23/85	CMOS MEMORY SUBASSEMBLY B-FRAME
			6966079-22	A12E3A2	H	2/15/91	CMOS MEMORY SUBASSEMBLY A-FRAME
			6966079-23	A12E3A2	H	2/15/91	CMOS MEMORY SUBASSEMBLY A-FRAME
			6966081-20	A5A3	C	1/22/91	BATTERY BACKUP UNIT
			6966091-1	D1	-	7/31/85	IDENTIFICATION PLATE
			6966179	B45	-	7/23/86	LOGIC DIAGRAM
			6966189	B44	-	7/23/86	LOGIC DIAGRAM
			6966199	B56	-	7/23/86	LOGIC DIAGRAM
			6966209	B42	-	7/23/86	LOGIC DIAGRAM
			6966219	B62	-	7/23/86	LOGIC DIAGRAM
			6966249	B64	-	7/23/86	LOGIC DIAGRAM
			6966260-1	E2A42	-	1/14/85	PWB, MULTILAYER, B SIDE
			6967089-20	A4E2	H	2/22/91	EMI FILTER ASSEMBLY
			6967090-20	A2E1	C	11/2/87	+5V CONVERTER
			6967091-21	A4E1	D	5/19/89	12 V CONVERTER
			6967096-1	E2	A	3/28/85	FILTER FRAME
			6967097-1	D1	-	1/31/86	COVER
			106A869	B64	A	1/4/91	ARITHMETIC LOGIC DIAGRAM
			6966159	B59	-	7/23/86	ARITHMETIC LOGIC DIAGRAM
			6966239	B44	-	7/23/86	ARITHMETIC LOGIC DIAGRAM
			6966229	B40	-	7/23/86	ARITHMETIC LOGIC DIAGRAM
			106A899	B56	A	1/4/91	ARITHMETIC LOGIC DIAGRAM
			106A889	B50	A	1/4/91	ARITHMETIC LOGIC DIAGRAM
			106A909	B57	A	1/4/91	ARITHMETIC LOGIC DIAGRAM
			106A919	B49	A	1/4/91	ARITHMETIC LOGIC DIAGRAM
			6965920	B56	A	1/4/91	ARITHMETIC LOGIC DIAGRAM
			6965919	B55	A	1/4/91	ARITHMETIC LOGIC DIAGRAM
			6965922	B55	-	7/23/86	ARITHMETIC LOGIC DIAGRAM
			6965921	B51	-	7/23/86	ARITHMETIC LOGIC DIAGRAM
			6953329	B44	B	5/25/88	ARITHMETIC LOGIC DIAGRAM
			6953159	B46	B	5/25/88	ARITHMETIC LOGIC DIAGRAM
			6966149	B37	-	7/23/86	ARITHMETIC LOGIC DIAGRAM
			6965979	B35	-	7/23/86	ARITHMETIC LOGIC DIAGRAM
			121A579	B44	-	1/19/88	ARITHMETIC LOGIC DIAGRAM
			6966269	B48	-	7/23/86	ARITHMETIC LOGIC DIAGRAM

DWG	SIGNATURE	DATE	DWG	SIGNATURE	DATE
8.12	ENGR K. TERRY			ENGR	
	ENGR Kim Terry	9-24-94		ENGR	
	ENGR			ENGR	
	ENGR			ENGR	
	ENGR			APP Mark E. Floyd	9-27-94
	ENGR			APP	
	ENGR			APP	
	ENGR			LTR E PCN 4	

NATIONAL AERONAUTICS AND SPACE ADMINISTRATION
LYNDON B. JOHNSON SPACE CENTER HOUSTON, TEXAS

VENDOR DRAWING REFERENCES

SPACE SHUTTLE | TBL NO 8-1
ALL

BASIC REV E-4

FOR DETAILED COMPONENT AND LOGIC INFORMATION REFER TO:

SSSH DWG NO.	SSSH DWG TITLE	VENDOR NAME	VENDOR DWG NO.	VENDOR SHEET NO.	REV	DATE	VENDOR DRAWING TITLE
8.12 CONT		RI	VS70-720212	1-2	F	7/27/92	MASS MEMORY AND COMPUTER INTERFACE
			VS70-720239	1-5	B	9/15/88	COMPUTER SYNCHRONIZATION AND FAIL STATUS
			VS70-720232	1-4	D	7/27/92	COMPUTER SYNC AND FAIL STATUS
			VS70-720242	1-3	C	7/27/92	COMPUTER DATA BUS INTERFACE
			VS70-720262	1-6	J	10/18/91	BACKUP FLIGHT CONTROLLER COMPUTER INTERFACE
			VS70-720269	1-6	F	10/18/91	BFC COMPUTER INTERFACE
			VS70-720519	1-2	C	10/6/88	INTERCOMPUTER DATA BUS ICB 01-05
			VS70-720512	1	C	7/27/92	ICC DATA BUS
			VS70-720539	1-2	A	11/11/88	DATA BUSES IP 1 - IP 5
			VS70-720542	1-3	B	1/20/83	WIRING DP AND S DATABUS BUB 01, BUB 05 THROUGH BUB 08
			VS70-720559	1-4	D	11/11/93	DATA BUS LBB 01 AND LBB 02
			VS70-720222	1-4	K	7/27/92	COMPUTER POWER AND CONTROLS
8.13	ENHANCED MULTIPLEXER/ DEMULTIPLEXER	ROCKWELL	VS70-720202	1-3	D	3/87	SCHEMATIC DIAGRAM - DATA PROCESSING & SOFTWARE FLT CONT MDM POWER & CONTROL
			VS70-720209	1-3	B	12/87	SCHEMATIC DIAGRAM - DATA PROCESSING & SOFTWARE FLT CONT MDM POWER & CONTROL
			VS72-948102	6-7,56-57	C/EO/ D15	6/87	INTEGRATED SYS SCHEMATIC SOLID ROCKET BOOSTER
			VS72-948099	6-7,56-57	N/C/EO/ A12	10/87	INTEGRATED SYS SCHEMATIC SOLID ROCKET BOOSTER
		SINGER/ KEARFOTT	Y214A367-01	1	A	4/75	SERIAL MIA
			Y215A030-02	1	B	2/75	SMIA CONTROL/TIMING HYBRID
			Y215A032-01	1-2	A	9/74	SMIA XMTR/RCVR HYBRID
			Y215A032-01	1-4	-	1/75	SMIA LSI MICROCIRCUIT HYBRID
		HONEYWELL/ SPERRY	4027158-902	1-2	A	4/77	MDM MIA INTERFACE MODULE SRB
			4027159-901	1-5	-	12/75	MDM SCU MODULE SRB
			4027160-902	1-5	-	5/77	MDM IOM PWR SUPPLY MODULE SRB
			4027161-901	1-2	-	12/75	MDM A/D CONVERTER MODULE SRB
			4027162-901	1-7	-	12/75	MDM I/O MODULE (SRB AID) SRB
			4027341-901	1-3	-	12/75	MDM I/O MODULE (SRB DIH) SRB
			4027342-901	1-5	-	9/77	MDM I/O MODULE (SRB DOL) SRB
		HONEYWELL	825807-901	1-5	A	3/89	EMDM SCU MODULE
			825805-901	1-4	-	3/89	EMDM CORE PWR SUPPLY
			8258081-901	1-2	-	3/89	EMDM A/D CONVERTER MODULE
			8258101-901	1-4	-	3/89	EMDM I/O MODULE (AID)
			8258091-901	1-5	-	3/89	EMDM I/O MODULE (AIS)
			8258151-901	1-5	-	3/89	EMDM I/O MODULE (DIL)
			8258131-901	1-5	-	3/89	EMDM I/O MODULE (DIH)
			8258141-901	1-5	-	3/89	EMDM I/O MODULE (DOL)
			8258121-901	1-5	-	3/89	EMDM I/O MODULE (DOH)
			8258111-901	1-5	-	3/89	EMDM I/O MODULE (AOD)
			8258161-901	1-5	-	3/89	EMDM I/O MODULE (SIO)
			8258171-901	1-5	-	3/89	EMDM I/O MODULE (TAC)
			8258061-901	1-2	A	3/89	EMDM MIA INTERFACE MODULE
			1901858	1-2	-	2/89	EMDM IOM POWER SUPPLY MODULE

DWG	SIGNATURE	DATE	DWG	SIGNATURE	DATE
8.12	ENGR K. TERRY			ENGR	
	ENGR Kim Terry	9-24-94		ENGR	
8.13	ENGR KATHY AKAGI			ENGR	
	ENGR Kathy Akagi	9/23/94		ENGR	
	ENGR			APP Robert S. Floyd	9-27-94
	ENGR			APP	
	ENGR			APP	
	ENGR			LTR E PCN 4	

NATIONAL AERONAUTICS AND SPACE ADMINISTRATION
LYNDON B. JOHNSON SPACE CENTER HOUSTON, TEXAS

VENDOR DRAWING REFERENCES

SPACE SHUTTLE | TBL NO 8-I
ALL

BASIC REV E-4

DATE: 05/02/96	NAME: LAM	VERSION: BPT: 9
DATE: 05/21/96	NAME: MDU	VERSION: INK: 12
DATE: 06/13/96	NAME: BJT	VERSION: INK: 13

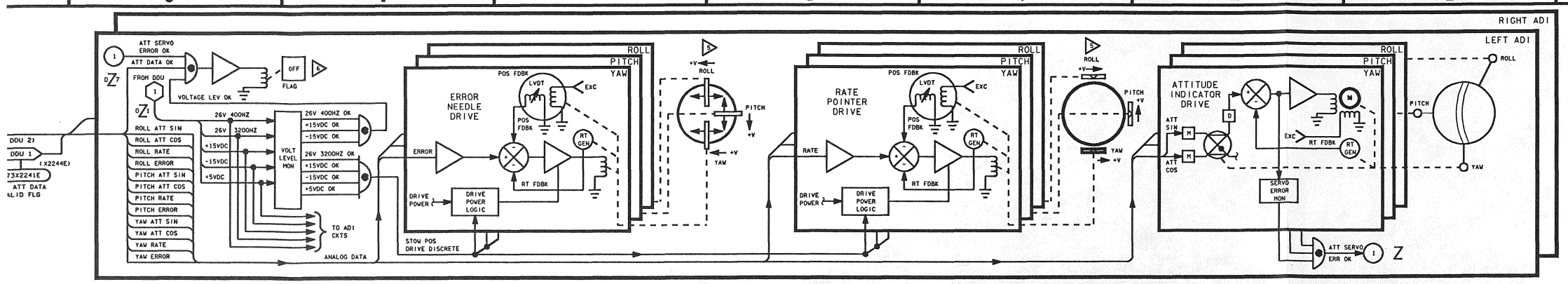

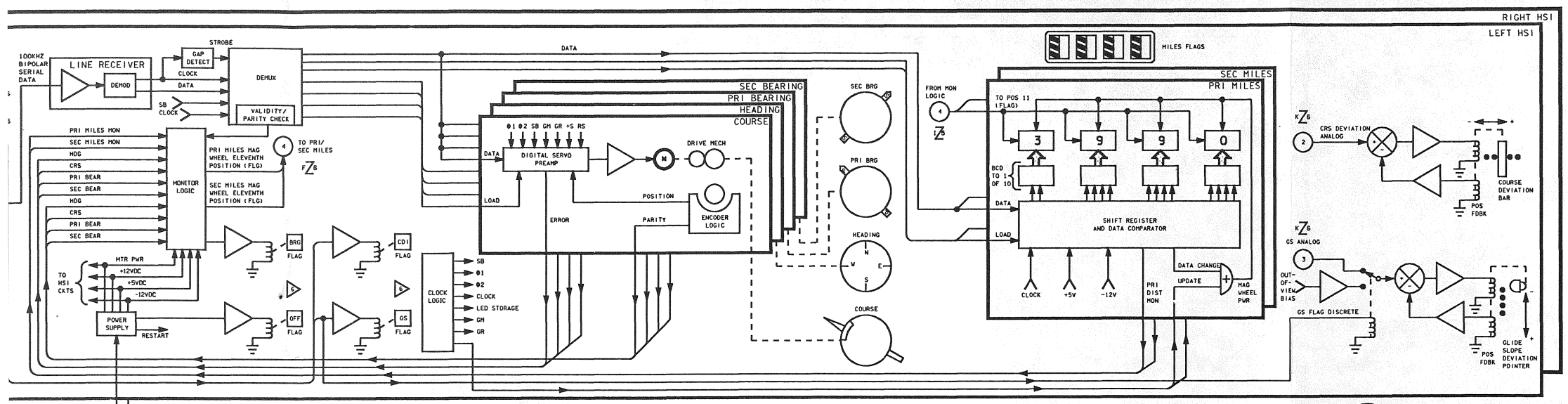

ADI SCALE SELLECTION (01-25 AND SUBS)

OPS MAJOR MODE	SWITCH POSITION	FULL SCALE VALUE ATTITUDE RATE ROLL	PITCH	YAW	ATTITUDE ERROR R	P	Y
		deg/sec	deg/sec	deg/sec	deg	deg	deg
101-106 601 201,202 801 301-303	HIGH	10	10	10	10	10	10
	MED	5	5	5	5	5	5
	LOW	1	1	1	1	1	1
304 602 IPH=4,6		deg/sec	deg/sec	deg/sec	deg	deg	deg
	HIGH	10	10	10	25	5	2.5
	MED	5	5	5	25	2	2.5
	LOW	1	1	1	10	1	2.5
602 IPH=5		deg/sec	deg/sec	deg/sec	deg	G	deg
	HIGH	10	10	10	25	1.25	2.5
	MED	5	5	5	25	1.25	2.5
	LOW	1	1	1	10	0.5	2.5
305 603 S-TURN & ACQUISITION PHASES (IPH≤ 1)					deg	G	deg
	HIGH	[5 deg/s]	[5 deg/s]	[5 DEG]	25	1.25	2.5
	MED*	TIME TO HAC (10 SEC)	ALTITUDE ERR (±5 kft)	HEADING ERR (±5 DEG)	25	1.25	2.5
	LOW	[5 deg/s]	[5 deg/s]	[5 DEG]	10	0.50	2.5
305 603 HEADING ALIGNMENT PHASE (IPH=2)					deg	G	deg
	HIGH	[5 deg/s]	[5 deg/s]	[5 deg/s]	25	1.25	2.5
	MED*	TIME TO HAC (10 SEC)	ALTITUDE ERR (±5 kft)	RADIAL ERR (±5 kft)	25	1.25	2.5
	LOW	[5 deg/s]	[5 deg/s]	[5 deg/s]	10	0.50	2.5
305 603 PREFINAL PHASE (IPH=3)					deg	G	deg
	HIGH	[5 deg/s]	[5 deg/s]	[5 deg/s]	25	1.25	2.5
	MED*	N/A-STOWED	ALTITUDE ERR (±1 kft)	Y-POSN ERR (±1 kft)	25	1.25	2.5
	LOW	[5 deg/s]	[5 deg/s]	[5 deg/s]	10	0.50	2.5
305 603 TG, END=TRUE ALT_WHEELS ≠ M_BLANK WOWLON=0					deg	G	deg
	HIGH	[5 deg/s]	[5 deg/s]	[5 deg/s]	25	1.25	2.5
	MED*	N/A-STOWED	ALTITUDE ERR (±1 kft)	Y-POSN ERR (±1 kft)	25	1.25	2.5
	LOW	[5 deg/s]	[5 deg/s]	[5 deg/s]	10	0.50	2.5
305 603 TG, END=TRUE ALT_WHEELS < M_BLANK and I-loaded timer not expired WOWLON=0					deg	G	deg
	HIGH	[5 deg/s]	[5 deg/s]	[5 deg/s]	25	1.25	2.5
	MED*	N/A-STOWED	N/A-STOWED	N/A-STOWED	25	1.25	2.5
	LOW	[5 deg/s]	[5 deg/s]	[5 deg/s]	10	0.50	2.5
305 603 TG, END=TRUE ALT_WHEELS ≠ M_BLANK and I-loaded timer expired WOWLON=0					deg	G	deg
	HIGH	[5 deg/s]	[5 deg/s]	[5 deg/s]	25	1.25	2.5
	MED	[5 deg/s]	[5 deg/s]	[5 deg/s]	25	1.25	2.5
	LOW	[5 deg/s]	[5 deg/s]	[5 deg/s]	10	0.50	2.5
305 603 WOWLON=1					deg	G	deg
	HIGH	[5 deg/s]	[5 deg/s]	[5 deg/s]	20	10	2.5
	MED	[5 deg/s]	[5 deg/s]	[5 deg/s]	5	5	2.5
	LOW	[5 deg/s]	[5 deg/s]	[5 deg/s]	1	1	2.5

* ASSUMES THAT THE I-LOAD, DISPLAY OPTION, IS ON FOR THE ADI RATE POINTERS TO DISPLAY TAEM CUES WITH THE ADI RATE SWITCH IN THE MED SETTING. IF DISPLAY OPTION=OFF, THE ADI MED RATE DISPLAYS THE DEFAULT MEDIUM RATES OF 5 deg/sec.

GUIDANCE CUES DISPLAYED IN MM305/603 FOR MEDIUM ADI RATE SWITCH SETTING:
TIME TO HAC INTERCEPT (TANGENCY) — RADIAL ERROR FROM DESIRED HAC POSITION
ALTITUDE ERROR WRT GUIDANCE COMPUTED SPIRAL HAC — Y-POSITION ERROR IN RUNWAY COORDINATES
HEADING ERROR WRT HAC INTERCEPT — N/A-INDICATES NEEDLE STOWED

NOTE: SQUARE [ ] BRACKETS PROVIDE THE I-LOADED FULL SCALE DEFLECTION VALUE OF THE DESIRED PARAMETER (VERIFY THE CURRENT I-LOAD VALUE IN JSC-19350, THE I-LOAD REQUIREMENTS DOCUMENT)

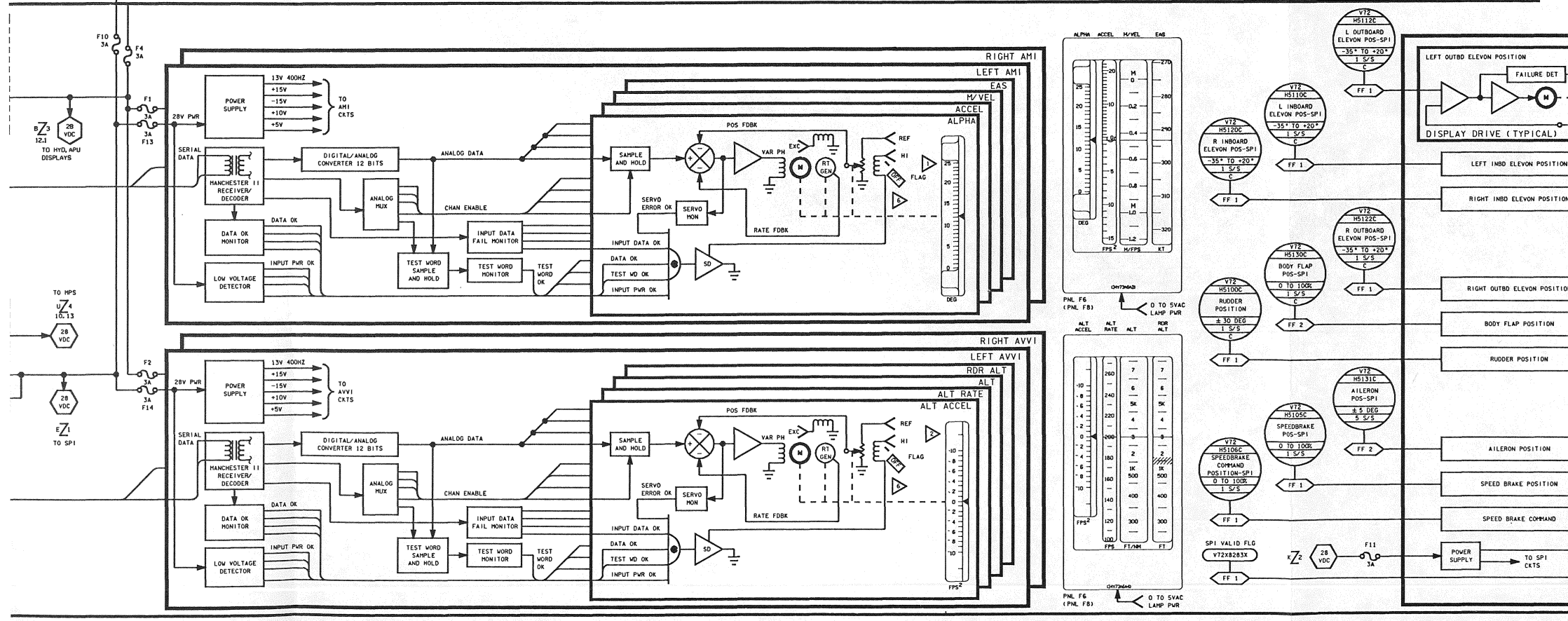

10. DDU DOES NOT REQUIRE COOLING

D PWR SUPPLY "D" FAILURE NOT DETECTED BY DDU GOOD DISCRETE ON TLM

8. DEFAULT POSITIONS OF SIMPLEX SWITCHES ARE DESIGNATED BY A DECAL "●"

D SEE DWG 9.17 NOTE 4 FOR SENSE SWITCH APPLICATION

D ALL FLAGS WILL BE VISIBLE WHEN POWER IS OFF

D ERROR NEEDLES AND RATE POINTERS ARE SHOWN IN ZERO POSITION. NEEDLES ARE SPRING LOADED AND WILL BE OUTSIDE THE FIELD OF VIEW WHEN POWER IS OFF OR WHEN DRIVE TO STOW POSITION WITH A MINUS 7.25V ANALOG SIGNAL FROM THE DDU

D THE DISPLAYS ARE DRIVEN BY SIGNALS FROM THE DATA BUS SELECTED BY THE DATA BUS SWITCHES AS FOLLOWS
DATA BUS- 1, 2, 3, OR 4
H51- 10 DATA WORDS
ADI- 14 DATA WORDS
AVVI- 6 DATA WORDS
AMI- 6 DATA WORDS
MIA 1 WILL BE SELECTED FOR INCONSISTANT DATA BUS SELECT INPUTS

D THE SIGNAL FLOW IS FROM THE GPC'S TO DDU'S, THEN TO THE DISPLAYS. THE SYMBOL DDU IS USED HERE TO PROVIDE A CONVENIENT MEANS OF ASSOCIATING THE MML NUMBERS AND TLM WITH THEIR RESPECTIVE SIGNALS THAT ARE ACTUALLY GENERATED IN THE GPC'S

D THE ALT ACCEL IS PRESENTED BY MEANS OF A MOVING POINTER DISPLAYED AGAINST A FIXED SCALE. THE OTHER THREE INDICATORS (ALT, RDR ALT AND ALT RATE) PRESENT THE DATA BY A MOVING TAPE SCALE BEHIND A FIXED LUBBER LINE

NOTES: D THE ANGLE OF ATTACK (ALPHA) IS PRESENTED BY MEANS OF A MOVING POINTER AND MOVING TAPE SCALE. THE POINTER INDICATES AN ANGLE OF ATTACK BETWEEN MINUS 3.33 AND PLUS 23.33 DEGREES. WHEN THE ANGLE OF ATTACK CONTINUES TO INCREASE BEYOND THE POINTER RANGE, THE TAPE SCALE WILL MOVE WHILE THE POINTER REMAINS FIXED. THE OTHER THREE INDICATORS (ACCEL, M/VEL AND EAS) PRESENT THE DATA BY A MOVING TAPE SCALE BEHIND A FIXED LUBBER LINE

1 G&C DISP 1

SIGNATURE	DATE
DSGN L. BUCHANAN	3/30/79
DR L. BUCHANAN	8/14/79
ENGR M. SARAFIN	
APDS	6/19/96
APDS	6/25/96
APDS	7/2/96
APDS S. K. Kelly	7-5-96

NATIONAL AERONAUTICS AND SPACE ADMINISTRATION
LYNDON B. JOHNSON SPACE CENTER HOUSTON, TEXAS

G&C DEDICATED DISPLAYS

SPACE SHUTTLE | ALL | DWG NO 9.1

LTR E | PCN 6 | 126.5 X 34 | PAGE | SHEET 1 OF 2

BASIC REV E-6

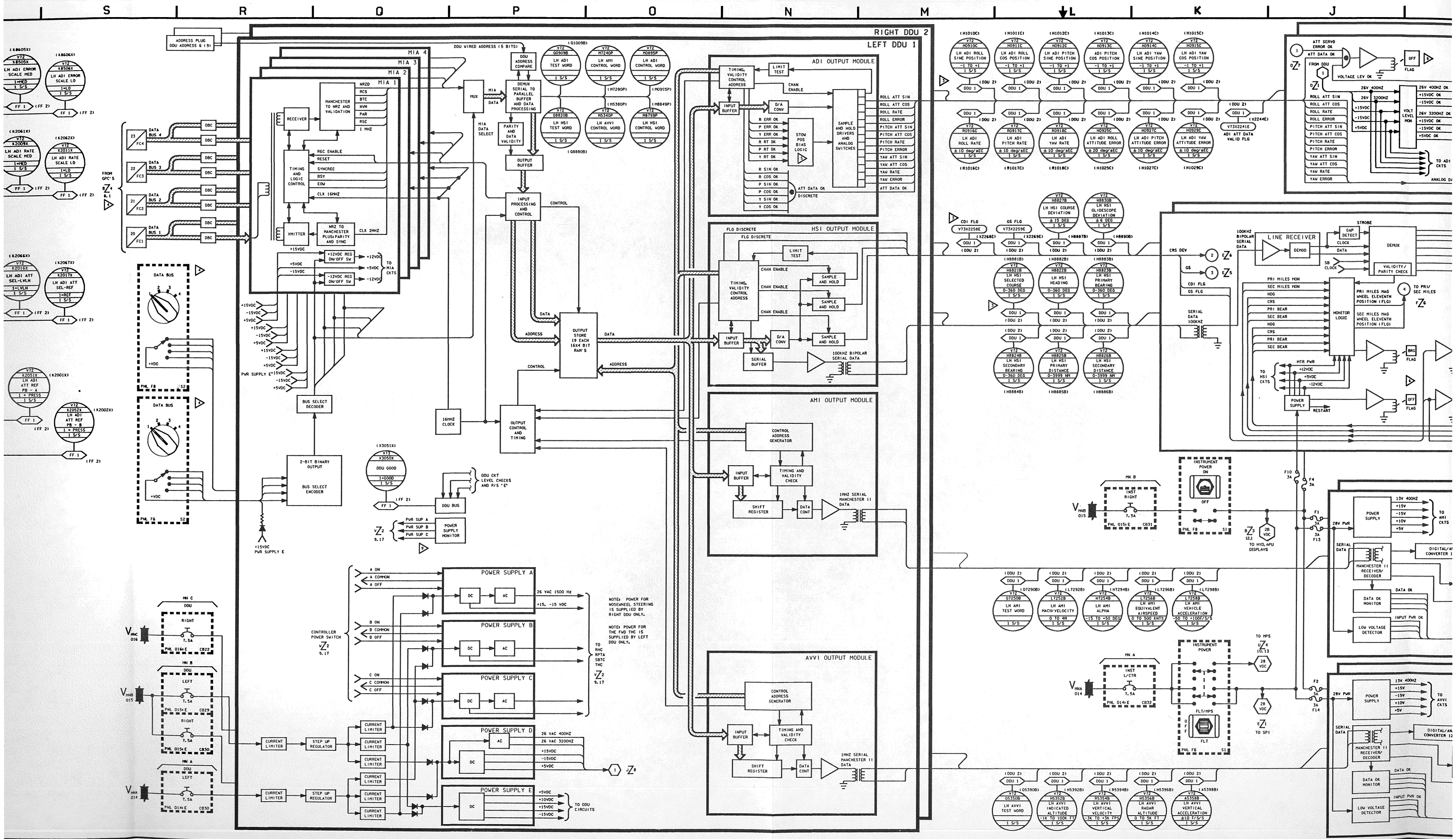

S
R
Q
P
O
N
M
L
K
J
RIGHT DDU 2
LEFT DDU 1
MIA 4
MIA 3
MIA 2
MIA 1
ADI OUTPUT MODULE
HSI OUTPUT MODULE
AMI OUTPUT MODULE
AVVI OUTPUT MODULE
POWER SUPPLY A
POWER SUPPLY B
POWER SUPPLY C
POWER SUPPLY D
POWER SUPPLY E
LINE RECEIVER

DATE: 06/13/96 | NAME: BJT | VERSION: INK 13

W V U T S R Q P O N

8 7 6 5 4 3 2 1

ADI
ERROR
HIGH
MED
LOW
(K8604X) V72 K8504X LH ADI ERROR SCALE HI 1=HI 1 S/S FF 1 (FF 2)
(K8605X) V72 K8505X LH ADI ERROR SCALE MED 1=MED 1 S/S FF 1 (FF 2)
(K8606X) V72 K8506X LH ADI ERROR SCALE LO 1=LO 1 S/S FF 1 (FF 2)
PNL F6 (PNL F8) S6 (S6)
RATE
(K2060X) V72 K2008X LH ADI RATE SCALE HI 1=HI 1 S/S FF 1 (FF 2)
(K2061X) V72 K2009X LH ADI RATE SCALE MED 1=MED 1 S/S FF 1 (FF 2)
(K2062X) V72 K2011X LH ADI RATE SCALE LO 1=LO 1 S/S FF 1 (FF 2)
PNL F6 (PNL F8) S7 (S7)
1.2K
$V_{CNTLAB2}$
$V_{CNTLBC2}$

ADI
ATTITUDE
INRTL
LVLH
REF
(K2065X) V72 K2015X LH ADI ATT SEL-INRTL 1=INTRL 1 S/S FF 1 (FF 2)
(K2066X) V72 K2016X LH ADI ATT SEL-LVLH 1=LVLH 1 S/S FF 1 (FF 2)
(K2067X) V72 K2017X LH ADI ATT SEL-REF 1=REF 1 S/S FF 1 (FF 2)
PNL F6 (PNL F8) S5 (S5)

RADAR ALTM 1 (●) 2
(K8685X) V72 K8585X R ALT LH DIS SEL 1 1=SEL 1 1 S/S FF 1 (FF 2)
(K8686X) V72 K8586X R ALT LH DIS SEL 2 1=SEL 2 1 S/S FF 1 (FF 2)
PNL F6 (PLN F8) S4 (S4)
$V_{CNTLBC2}$
$V_{CNTLAB2}$

HSI SELECT
MODE ENTRY
TAEM
APPROACH
(K8680X) V72 K8580X LH HSI MODE ENTRY 1=ENTRY 1 S/S FF 1 (FF2)
(K8681X) V72 K8581X LH HSI MODE TAEM 1=TAEM 1 S/S FF 1 (FF2)
(K8682X) V72 K8582X LH HSI MODE A/L 1=MODE A/L 1 S/S FF 1 (FF2)
PNL F6 (PNL F8) S3 (S3)

HSI SELECT
SOURCE
TACAN
MLS
1
2
3
(K8687X) V72 K8587X LH HSI SOURCE-TACAN 1=TACAN 1 S/S FF 1 (FF2)
(K8688X) V72 K8588X LH HSI SOURCE-NAV 1=NAV 1 S/S FF 1 (FF2)
(K8689X) V72 K8589X LH HSI SOURCE-MLS 1=MLS 1 S/S FF 1 (FF2)
PNL F6 (PNL F8) S4 (S4)
(K8601X) V72 K8501X LH HSI SOURCE-1 1=1 1 S/S FF 1 (FF 2)
(K8602X) V72 K8502X LH HSI SOURCE-2 1=2 1 S/S FF 1 (FF 2)
(K8603X) V72 K8503X LH HSI SOURCE-3 1=3 1 S/S FF 1 (FF 2)
PNL F6 (PNL F8) S5 (S5)

AIR DATA
LEFT
RIGHT
(K6391X) V72 K6381X LH ADS SOURCE-L 1=LEFT 1 S/S FF 1 (FF 2)
(K6392X) V72 K6382X LH ADS SOURCE NAV 1=NAV 1 S/S FF 1 (FF 2)
(K6393X) V72 K6383X LH ADS SOURCE-R 1=RIGHT 1 S/S FF 1 (FF 2)
PNL F6 (PNL F8) S4 (S4)

$V_{CNTLBC1}$
$V_{CNTLAB1}$
$V_{CNTLBC2}$
$V_{CNTLAB2}$
ATT REF
(K2001X) V72 K2051X LH ADI ATT REF PB - A 1 = PRESS 1 S/S FF 1 (F2)
(K2002X) V72 K2052X LH ADI ATT REF PB - B 1 = PRESS 1 S/S FF 1 (FF 2)
PNL F6 (PNL F8) S3 (S3)

DATA BUS
+VDC
PNL F8 S2
PNL F6 S2

ADDRESS PLUG DDU ADDRESS 6 (9)
DDU WIRED ADDRESS (5 BITS)
MIA 4
MIA 3
MIA 2
MIA 1
FROM GPC'S 2/4 A1
DATA BUS 4 FC4 23
DATA BUS 3 FC3 22
DATA BUS 2 FC2 21
DATA BUS 1 FC1 20
DBC
MANCHESTER TO NRZ AND VALIDATION
NRZD
RCS
BTC
NVM
PAR
RSC
1 MHZ
RECEIVER
TIMING AND LOGIC CONTROL
REC ENABLE
RESET
SYNCREC
BSY
EOW
CLK 16MHZ
XMITTER
NRZ TO MANCHESTER PLUS PARITY AND SYNC
CLR 2MHZ
+15VDC
+12VDC REG ON/OFF SW
+5VDC
-15VDC
-12VDC REG ON/OFF SW
TO MIA CKTS
PWR SUPPLY E +15VDC -15VDC +5VDC +15VDC -15VDC +5VDC +15VDC -15VDC +5VDC +15VDC -15VDC
MIA DATA
MUX
MIA DATA SELECT
DDU ADDRESS COMPARE
DEMUX SERIAL TO PARALLEL BUFFER AND DATA PROCESSING
PARITY AND DATA VALIDITY
OUTPUT BUFFER
(Q1009B) V72 Q0909B LH ADI TEST WORD 1 S/S
(H7240P) V72 H7240P LH AMI CONTROL WORD 1 S/S
(H7280P) V72 H5380P
(H0955P) V72 H2855P LH ADI CONTROL WORD 1 S/S
(H8849P) V72 H8799P LH HSI CONTROL WORD 1 S/S
(Q8820B) V72 Q8820B LH HSI TEST WORD 1 S/S
(H7340P) V72 H5340P LH AVVI CONTROL WORD 1 S/S
(Q8880B)
INPUT PROCESSING AND CONTROL
CONTROL
DATA
ADDRESS
OUTPUT STORE 19 EACH 16X4 BIT RAM'S
16MHZ CLOCK
OUTPUT CONTROL AND TIMING
BUS SELECT DECODER
2-BIT BINARY OUTPUT
BUS SELECT ENCODER
+15VDC PWR SUPPLY E
(X3051X) V73 X3050X DDU GOOD 1=GOOD 1 S/S FF 1 (FF 2)
DDU CKT LEVEL CHECKS AND P/S "E"
DDU BUS
PWR SUP A PWR SUP B PWR SUP C
POWER SUPPLY MONITOR
9.17

ADI OUTPUT MODULE
TIMING, VALIDITY CONTROL ADDRESS
LIMIT TEST
CHAN ENABLE
INPUT BUFFER
D/A CONV
R ERR OR P ERR OR Y ERR OR R RT OK P RT OK Y RT OK
STOW POS BIAS LOGIC
SAMPLE AND HOLD DRIVERS AND ANALOG SWITCHES
R SIN OR R COS OR P SIN OR P COS OR Y SIN OR Y COS OR
ATT DATA OK
DISCRETE

HSI OUTPUT MODULE
FLG DISCRETE
TIMING, VALIDITY CONTROL ADDRESS
LIMIT TEST
CHAN ENABLE
SAMPLE AND HOLD
INPUT BUFFER
D/A CONV
SERIAL BUFFER
100KHZ BIPOLAR SERIAL DATA

AMI OUTPUT MODULE
CONTROL ADDRESS GENERATOR
INPUT BUFFER
TIMING AND VALIDITY CHECK
SHIFT REGISTER
DATA CONT
1MHZ SERIAL MANCHESTER II DATA

AVVI OUTPUT MODULE
CONTROL ADDRESS GENERATOR
INPUT BUFFER
TIMING AND VALIDITY CHECK
SHIFT REGISTER
DATA CONT
1MHZ SERIAL MANCHESTER II DATA

MN C DDU RIGHT 7.5A PNL D16k E CB22 V_{MNC} 016
MN B DDU LEFT 7.5A PNL D15k E CB29 RIGHT 7.5A PNL D15k E CB30 V_{MNB} 015
MN A DDU LEFT 7.5A PNL D14k E CB30 V_{MNA} 014

CONTROLLER POWER SWITCH 9.17
A ON A COMMON A OFF
B ON B COMMON B OFF
C ON C COMMON C OFF
POWER SUPPLY A DC AC 26 VAC 1500 Hz +15, -15 VDC
POWER SUPPLY B DC AC
POWER SUPPLY C DC AC
POWER SUPPLY D AC DC 26 VAC 400HZ 26 VAC 3200HZ +15VDC -15VDC +5VDC
POWER SUPPLY E DC +5VDC +10VDC +15VDC -15VDC TO DDU CIRCUITS
TO RHC RPTA SBTC THC 9.17
CURRENT LIMITER
STEP UP REGULATOR

NOTE: POWER FOR NOSEWHEEL STEERING IS SUPPLIED BY RIGHT DDU ONLY.
NOTE: POWER FOR THE FWD THC IS SUPPLIED BY LEFT DDU ONLY.

DATE: 05/10/96	NAME: LAM	VERSION: BPT: 4
DATE: 05/20/96	NAME: MDU	VERSION: BPT: 5
DATE: 06/13/96	NAME: BJT	VERSION: INK: 8

AFT ADI

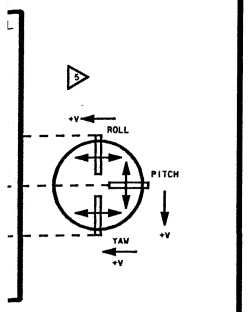

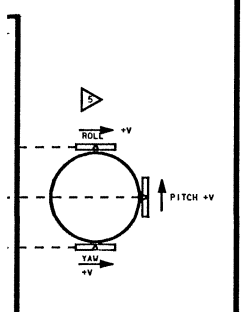

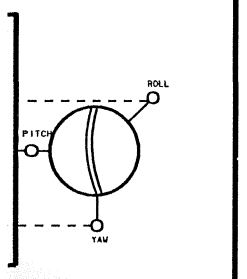

Z

F6

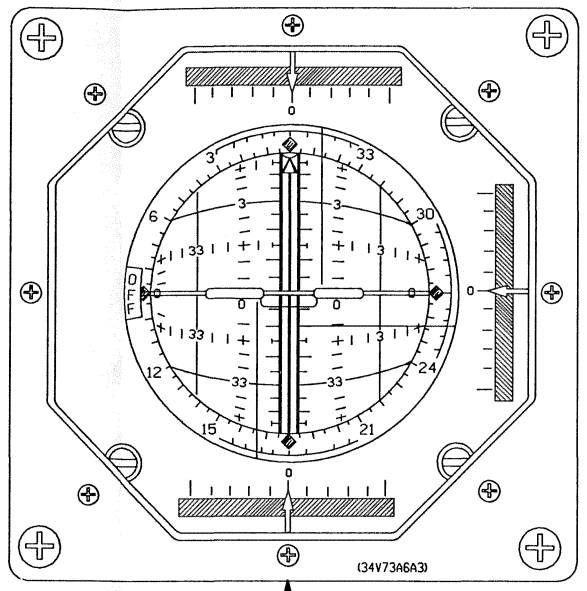

PNL F6
(PNL F8) (PNL A6)

0 TO 5 VAC
LAMP PWR

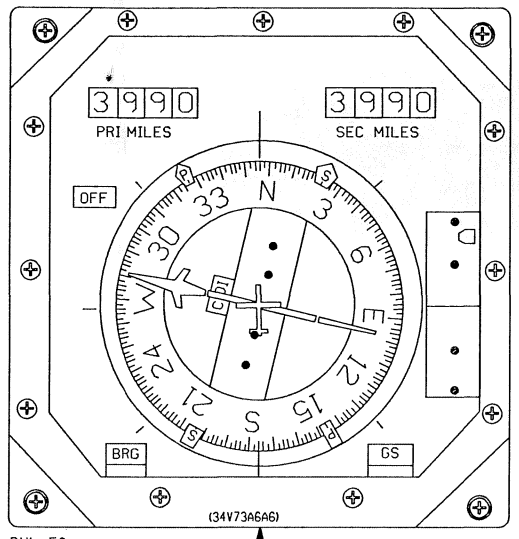

PNL F6
(PNL F8)

0 TO 5VAC
LAMP PWR

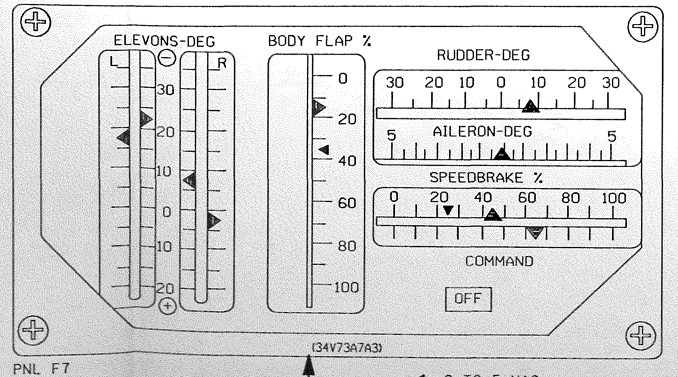

PNL F7

0 TO 5 VAC
LAMP PWR

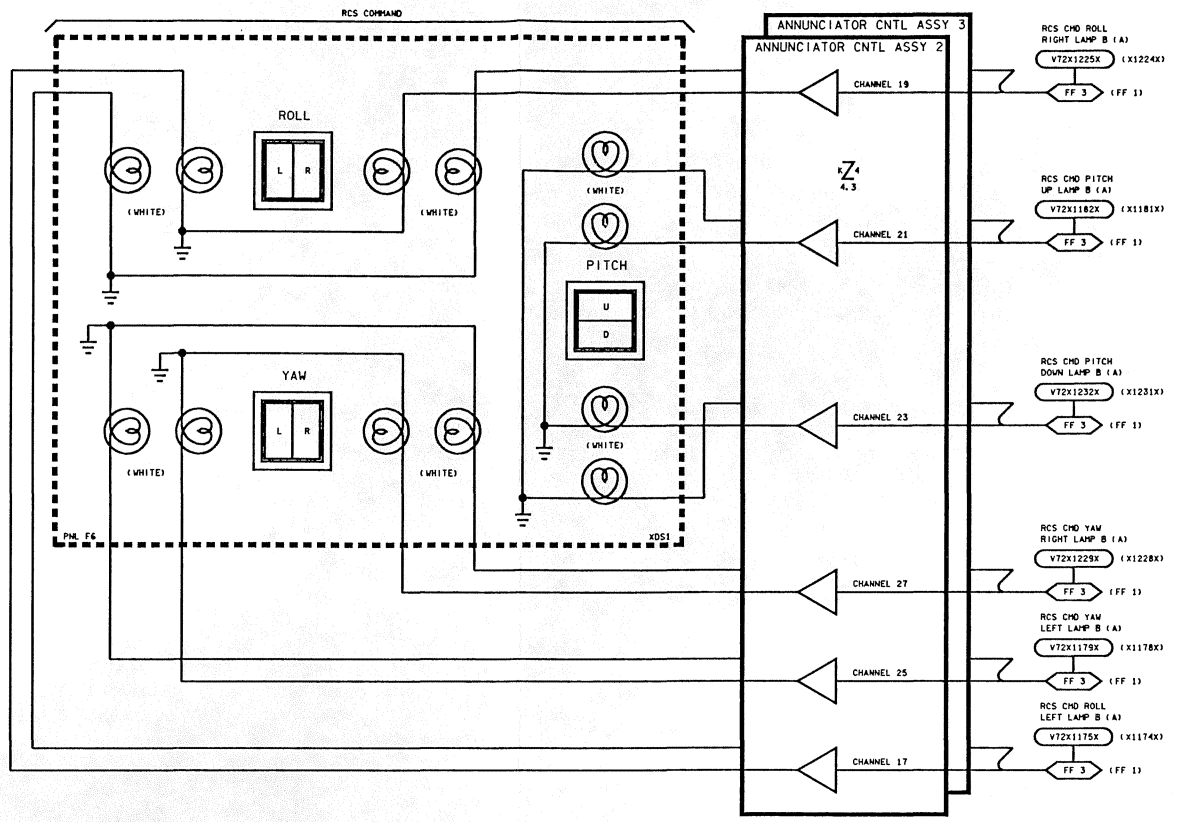

NORMAL ACCELEROMETER (G-METER)

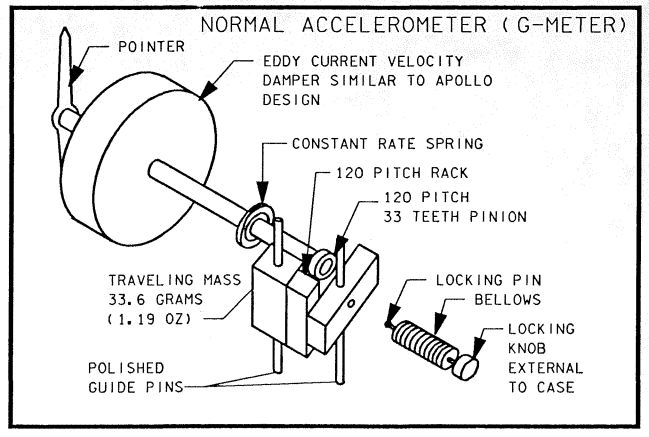

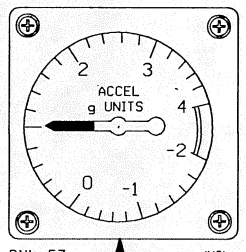

PNL F7 (M3)

0 TO 5VAC
LAMP PWR

DEDICATED DISPLAYS CHECKOUT - GNC 8 LIMIT VALUES

	(PARAMETER)		(UNITS)	(HIGH)	(LOW)
F6 (F8)	AMI:	ALPHA	DEG	+30	+2
		ACCEL	FPS 2	+30	+20
		M/VEL	FPS	3K	20K
		EAS	KNOTS	300	20
F6 (F8) (A1)	ADI:	R ATT	DEG	300	20
		P ATT	DEG	300	20
		Y ATT	DEG	300	20
		R RATE	MKS	3R	2L
		P RATE	MKS	3U	2D
		Y RATE	MKS	3R	2L
		R ATT ERR	MKS	3R	2L
		P ATT ERR	MKS	3U	2D
		Y ATT ERR	MKS	3R	2L
F6 (F8)	AVVI:	ALT ACCEL	FPS 2	+3	-2
		ALT RATE	FPS	+300	-200
		ALT	FT	300K	200
		RDR ALT	FT	3K	200
F6 (F8)	HSI:	SEL COURSE	DEG	30	200
		HEADING	DEG	300	20
		PRI BEAR	DEG	30	20
		SEC BEAR	DEG	300	200
		PRI MILES	NM	3000	200
		SEC MILES	NM	3000	200
		COURSE DEV	R/L DOT	15 R	15 L
		G/S DEV	U/D DOT	15 U	15 D
F7	SPI:	ELEVONS L OB	DEG	-30	-20
		IB	DEG	-30	-20
		R IB	DEG	-30	-20
		OB	DEG	-30	-20
		BODY FLAP	%	30	20
		RUDDER	DEG	3R	20L
		AILERON	DEG	3R	20L
		SPEEDBRAKE	%	30	20
		SPD BRK CMD	%	30	20

NOTES: 1. SEE SHEET 1 FOR APPLICABLE NOTES

G&C DISP 2

SIGNATURE	DATE	NATIONAL AERONAUTICS AND SPACE ADMINISTRATION LYNDON B. JOHNSON SPACE CENTER HOUSTON, TEXAS
DSGN TERRI FORSYTHE	6/4/79	
DR		
ENGR M. SARAFIN	8/17/90	G&C DEDICATED DISPLAYS
ENGR	6/19/96	
APP	6/20/96	
APP	7/8/96	SPACE SHUTTLE / DWG NO 9.1
APP S.K. Robinson	7/15/96	ALL / PAGE SHEET 2 OF 2
LTR E	SCN 8	176.5 X 34

BASIC REV E-6

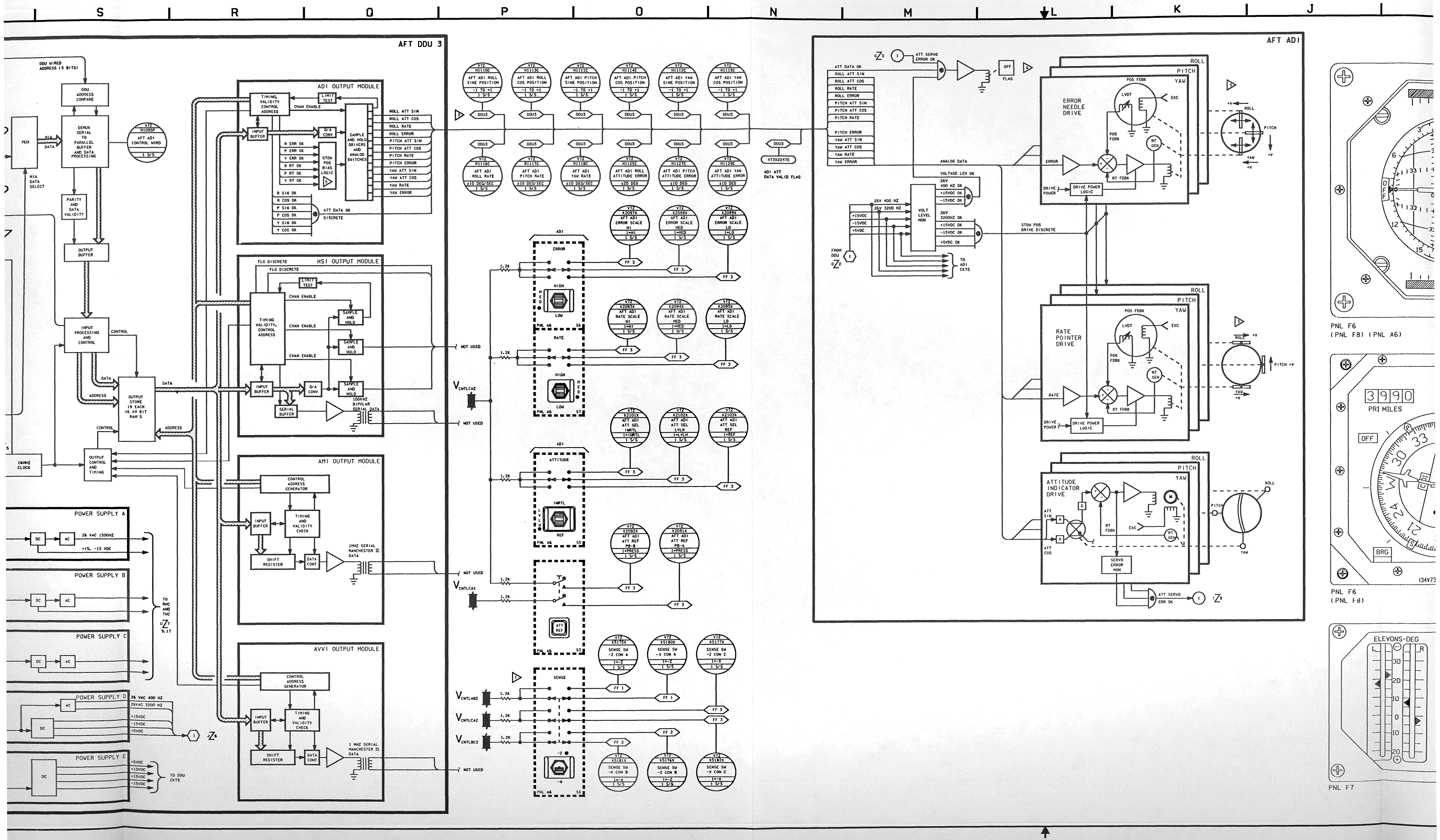

S
R
Q
P
O
N
M
L
K
J
AFT DDU 3
AFT ADI
ADI OUTPUT MODULE
HSI OUTPUT MODULE
AMI OUTPUT MODULE
AVVI OUTPUT MODULE
POWER SUPPLY A
POWER SUPPLY B
POWER SUPPLY C
POWER SUPPLY D
POWER SUPPLY E
ERROR NEEDLE DRIVE
RATE POINTER DRIVE
ATTITUDE INDICATOR DRIVE
PNL F6
(PNL F8) (PNL A6)
PRI MILES
PNL F6
(PNL F8)
ELEVONS-DEG
PNL F7

DATE: 06/13/96 | NAME: BJT | VERSION: INK: 8

AFT DDU 3

ADDRESS PLUG DDU ADDRESS 15

DDU WIRED ADDRESS (5 BITS)

DDU ADDRESS COMPARE

MIA 4
MIA 3
MIA 2
MIA 1

MANCHESTER TO NRZ AND VALIDATION
NRZD
RCS
BTC
NVM
PAR
RSC
1 MHZ

RECEIVER

TIMING AND LOGIC CONTROL
REC ENABLE
RESET
SYNCREC
BSY
EOW
CLK 16MHZ

XMITTER

NRZ TO MANCHESTER PLUS PARITY AND SYNC
CLK 2MHZ

MUX
MIA DATA
MIA DATA SELECT

DEMUX SERIAL TO PARALLEL BUFFER AND DATA PROCESSING

V72 H1095A AFT ADI CONTROL WORD 1 S/S

PARITY AND DATA VALIDITY

OUTPUT BUFFER

INPUT PROCESSING AND CONTROL

OUTPUT STORE 19 EACH 16 X 4 BIT RAM'S

OUTPUT CONTROL AND TIMING

FROM GPC'S
6Z3 8.1

DATA BUS 4 — 23 FCS — DBC
DATA BUS 3 — 22 FCS — DBC
DATA BUS 2 — 21 FCS — DBC
DATA BUS 1 — 20 FCS — DBC

+15VDC → +12VDC REG ON/OFF SW → +12VDC
+5VDC → +5VDC
-15VDC → -12VDC REG ON/OFF SW → -12VDC
TO MIA CKTS

+15VDC
-15VDC
+5VDC
PWR SUPPLY E (4 LINES EACH)

V73 K3052X DDU GOOD 1=GOOD 1 S/S → FF3

DDU CKT LEVEL CHECKS AND P/S 'E'

DDU BITE

16MHZ CLOCK

PWR SUP A
PWR SUP B
PWR SUP C
POWER SUPPLY MONITOR
6Z6 9.17

BUS SELECT DECODER

2-BIT BINARY OUTPUT
BUS SELECT ENCODER

CONTROLLER POWER SWITCH
7Z7 9.17

750Ω
+15VDC PWR SUPPLY E

A ON
A COMMON
A OFF
B ON
B COMMON
B OFF
C ON
C COMMON
C OFF

POWER SUPPLY A — DC — AC — 26 VAC 1500HZ, +15, -15 VDC
POWER SUPPLY B — DC — AC
POWER SUPPLY C — DC — AC
POWER SUPPLY D — AC — DC — 26 VAC 400 HZ, 26VAC 3200 HZ, +15VDC, -15VDC, +5VDC
POWER SUPPLY E — DC — +5VDC, +10VDC, +15VDC, -15VDC

TO RHC AND THC
7Z7 9.17

TO DDU CKTS

DATA BUS
+VDC
2 3 4 1
PNL A6 S4

MMC DDU AFT 7.5A PNL 016+E CB23
V_MMC 016+E

MMA DDU AFT 7.5A PNL 014+E CB31
V_MMA 014+E

CURRENT LIMITER
STEP UP REGULATOR

ADI OUTPUT MODULE

TIMING, VALIDITY CONTROL ADDRESS
LIMIT TEST
CHAN ENABLE
INPUT BUFFER
D/A CONV
R ERR OK
P ERR OK
Y ERR OK
R RT OK
P RT OK
Y RT OK
STOW POS BIAS LOGIC
SAMPLE AND HOLD DRIVERS AND ANALOG SWITCHES
R SIN OK
R COS OK
P SIN OK
P COS OK
Y SIN OK
Y COS OK
ATT DATA OK DISCRETE

ROLL ATT SIN
ROLL ATT COS
ROLL RATE
ROLL ERROR
PITCH ATT SIN
PITCH ATT COS
PITCH RATE
PITCH ERROR
YAW ATT SIN
YAW ATT COS
YAW RATE
YAW ERROR

HSI OUTPUT MODULE

FLG DISCRETE
TIMING VALIDITY, CONTROL ADDRESS
LIMIT TEST
CHAN ENABLE
SAMPLE AND HOLD
INPUT BUFFER
D/A CONV
SERIAL BUFFER
100KHZ BIPOLAR SERIAL DATA

NOT USED
V_CNTLCA2

AMI OUTPUT MODULE

CONTROL ADDRESS GENERATOR
INPUT BUFFER
TIMING AND VALIDITY CHECK
SHIFT REGISTER
DATA CONT
1MHZ SERIAL MANCHESTER II DATA

NOT USED
V_CNTLCA1

AVVI OUTPUT MODULE

CONTROL ADDRESS GENERATOR
INPUT BUFFER
TIMING AND VALIDITY CHECK
SHIFT REGISTER
DATA CONT
1 MHZ SERIAL MANCHESTER II DATA

NOT USED

V72 H1110C AFT ADI ROLL SINE POSITION -1 TO +1 1 S/S → DDU3
V72 H1113C AFT ADI ROLL COS POSITION -1 TO +1 1 S/S → DDU3
V72 H1111C AFT ADI PITCH SINE POSITION -1 TO +1 1 S/S → DDU3
V72 H1114C AFT ADI PITCH COS POSITION -1 TO +1 1 S/S → DDU3
V72 H1112C AFT ADI YAW SINE POSITION -1 TO +1 1 S/S → DDU3
V72 H1115C AFT ADI YAW COS POSITION -1 TO +1 1 S/S → DDU3

V72 H1116C AFT ADI ROLL RATE ±10 DEG/SEC 1 S/S → DDU3
V72 H1117C AFT ADI PITCH RATE ±10 DEG/SEC 1 S/S → DDU3
V72 H1118C AFT ADI YAW RATE ±10 DEG/SEC 1 S/S → DDU3
V72 H1125C AFT ADI ROLL ATTITUDE ERROR ±20 DEG 1 S/S → DDU3
V72 H1127C AFT ADI PITCH ATTITUDE ERROR ±10 DEG 1 S/S → DDU3
V72 H1129C AFT ADI YAW ATTITUDE ERROR ±10 DEG 1 S/S → DDU3

DDU3 → V73X2247E ADI ATT DATA VALID FLAG

V72 K2097X AFT ADI ERROR SCALE HI 1=HI 1 S/S → FF 3
V72 K2098X AFT ADI ERROR SCALE MED 1=MED 1 S/S → FF 3
V72 K2099X AFT ADI ERROR SCALE LO 1=LO 1 S/S → FF 3

ADI ERROR
1.2K
HIGH
MED
LOW
PNL A6 S6

V72 K2093X AFT ADI RATE SCALE HI 1=HI 1 S/S → FF 3
V72 K2094X AFT ADI RATE SCALE MED 1=MED 1 S/S → FF 3
V72 K2095X AFT ADI RATE SCALE LO 1=LO 1 S/S → FF 3

ADI RATE
1.2K
HIGH
MED
LOW
PNL A6 S7

V72 K2101X AFT ADI ATT SEL INRTL 1=INRTL 1 S/S → FF 3
V72 K2102X AFT ADI ATT SEL LVLH 1=LVLH 1 S/S → FF 3
V72 K2103X AFT ADI ATT SEL REF 1=REF 1 S/S → FF 3

ADI ATTITUDE
1.2K
INRTL
LVLH
REF
PNL A6 S5

V72 K2092X AFT ADI ATT REF PB-B 1=PRESS 1 S/S → FF 3
V72 K2091X AFT ADI ATT REF PB-A 1=PRESS 1 S/S → FF 3

ATT REF
1.2K
PNL A6 S3

V72 K5175X SENSE SW -Z CON A 1=-Z 1 S/S → FF 1
V72 K5180X SENSE SW -X CON A 1=-X 1 S/S → FF 1
V72 K5177X SENSE SW -Z CON C 1=-Z 1 S/S → FF 3

SENSE
V_CNTLAB2
V_CNTLCA2
V_CNTLBC2
1.2K
-Z
-X
PNL A6 S1

V72 K5181X SENSE SW -X CON B 1=-X 1 S/S → FF 2
V72 K5176X SENSE SW -Z CON B 1=-Z 1 S/S → FF 2
V72 K5182X SENSE SW -X CON C 1=-X 1 S/S → FF 3

FROM DDU 6Z2

DATE: 03/01/96	NAME: VSH	VERSION: BPT:11
DATE: 03/13/96	NAME: VSH	VERSION: BPT:12
DATE: 04/05/96	NAME: BJB	VERSION: INK:5

RECEIVER/TRANSMITTER 3
RECEIVER/TRANSMITTER 2
RECEIVER/TRANSMITTER 1

ARINC INTERFACE
DATA LOAD CONTROL
16 BIT SHIFT REGISTER
SHIFT REGISTER CONTROL
SDA (DIFF OUTPUT)
SDB (DIFF OUTPUT)
BRL BEARING DATA TRANSFER ENA
RGL RANGE DATA TRANSFER ENA
RNG DATA
BRG DATA
TIMING SIGNAL
SRM ABVS RND BRD 10 KHZ RBO SHIFT

RANGE COMPUTATION
RANGE REGISTER
RANGE REGISTER REACHES LIMIT
RETURN TO SEARCH MODE
RANGE REGISTER OUTPUT
SERIAL RANGE DATA
RBO RND RTP CRC IPT
RLG STC
SEARCH TRACK
RANGE REGISTER CLOCK DRIVE UP/DOWN
SRM STV
TTP PPC 10 KHZ IPT
PROGRAMMER
DISABLE ITD YES
RANGE REGISTER SEARCH CLOCK
SIP RHP ERT CLU CLD
CLOSED ONLY FOR FIRST SEARCH
CLEAR AND PRESET RANGE REGISTER
TRANSFER RANGE DATA
TRD
PFB DTP CLG TSD
ENABLE DELAY COUNTER
COUNTER TIME COMPLETE
PRESET DELAY COUNTER
TMS 20 MILE SIG
ENABLE ELG LGT
DELAY COUNTER ENABLE AND TIME COMPLETE
RANGE DATA
DELAY COUNTER

IDENTIFICATION TONE
FINE BEARING MOD
BRD SHIFT FBM BVS RESET
SERIAL BRG DATA
PHASE DETECTOR VCO PEAK DETECTOR
ANT BRG VALID SIG ABVS
SHIFT REGISTER BRL STC 10 KHZ
BEARING REGISTER
.5 SEC DELAY
BRG VALID SIGNAL
3 SEC DELAY EBVS BVS
VCO 180° DET
PHASE DETECTOR
135 HZ PHASE LOCK LOOP
REF PHASE LOCK LOOP
HRP ARP

TACAN SERIAL DIGITAL CONTROL WORD
V74 K1511B TACAN 1 MODE X/Y 1=SEL Y 1 S/S (K1611B) (K1711B) FF 1 (FF 2) (FF 3)
V74 K1512B TACAN 1 AIR TO AIR 1 S/S (K1612B) (K1712B)
V74 K1513B TACAN 1 T/R + RCV ONLY 1=T/R 1 S/S (K1613B) (K1713B)
V74 K1514B TACAN 1 CHAN SEL 1=SEL 1 S/S (K1614B) (K1714B)
V74 K1515B TACAN 1 GPC 1=GPC 1 S/S (K1615B) (K1715B)
V74 K0141X TACAN 1 ANT SEL INH 1=INH 1 S/S (K0151X) (K0161X)
V74 K0178X TACAN 1 UP/LWR ANT LE 1=UPPER 1 S/S (K0188X) (K0198X)
V74 J1559B TACAN 1 RNG SELF TEST 1 S/S (J1659B) (J1759B)
V74 X1558B TACAN 1 RNG BITE STATUS 1 S/S (X1658B) (X1758B)
V74 X1560B TACAN 1 RNG SUPP PULSE 1 S/S (X1660B) (X1760B)
V74 X1532B TAC 1 BRG DATA PARITY 1=ODD 1 S/S (X1632B) (X1732B)
V74 H1534B TACAN 1 BRG STATUS 1 S/S (H1634B) (H1734B)
V74 H1535B TACAN 1 BEARING DATA 0 TO 179.9 DEG 1 S/S (H1635B) (H1735B)
V74 J1536B TACAN 1 BRG SELF TEST 1 S/S (J1636B) (J1736B)
V74 J1552B TACAN 1 RANGE STATUS 1 S/S (J1652B) (J1752B)
V74 H1553B TACAN 1 RANGE 18 BIT 0 TO 399 NM 1 S/S (H1653B) (H1753B)
TACAN SERIAL DIGITAL DATA LINE
V74 V4518A TACAN 1 AGC 0 TO 5V 10 S/S (V4519A) (V4520A) MDM OF2 (MDM OF2) (MDM OF2)
V74 X0070X TACAN 1 TEST STAT MON 1=GO 1 S/S (X0080X) (X0090X) FF 1 (FF 2) (FF 3)
V74 X0071X TACAN 1 POWER STATUS 1=ON 1 S/S (X0081X) (X0091X) FF 1 (FF 2) (FF 3)
OUTPUT DISCRETES

V74 S0140E TACAN 1 POWER ON 1=ON 1 S/S (S0150E) (S0160E) MDM OF4 (MDM OF4) (MDM OF4)
V72K8409X TACAN 1 MODE SEL X/Y (K8429X) (K8449X)
V72K8410X TACAN 1 AUTO (K8430X) (K8450X)
V72K8411X GPC FUNCTIONAL CONTROL (K8431X) (K8451X)
V72K8412X TACAN 1 T/R (K8432X) (K8452X)
V72K8400X TACAN 1 CHAN SEL-1 (K8420X) (K8440X)
V72K8401X TACAN 1 CHAN SEL-2 (K8421X) (K8441X)
V72K8402X TACAN 1 CHAN SEL-4 (K8422X) (K8442X)
V72K8403X TACAN 1 CHAN SEL-8 (K8423X) (K8443X)
V72K8404X TACAN 1 CHAN SEL-10 (K8424X) (K8444X)
V72K8405X TACAN 1 CHAN SEL-20 (K8425X) (K8445X)
V72K8406X TACAN 1 CHAN SEL-40 (K8426X) (K8446X)
V72K8407X TACAN 1 CHAN SEL-80 (K8427X) (K8447X)
V72K8408X TACAN 1 CHAN SEL-100 (K8428X) (K8448X)
FF 1 (FF 2) (FF 3)

TACAN 3
TACAN 2
TACAN 1
UNITS CHANNEL
TENS CHANNEL
HUNDREDS CHANNEL
FUNCTIONAL CONTROL
5 LK
AUTO
PWR ON STATUS
GPC
T/R
PWR
OFF
+5VDC
SIG GND
ANT SEL INH
ANT UP/L SEL
UPR AUTO LWR
10'S 1'S 20'S 2'S 40'S 4'S 80'S 8'S 100
X/Y MODE CONTROL
CHANNEL
MODE RCV T/R OFF GPC
ANT SEL UPPER LOWER AUTO
S1 (S3, S5)
S2 (S4, S6)
ST (S8, S9)
PNL 07
$V_{ES51BC\ FD}$ (2CA FD) (3AB FD)

IDT TO AUDIO DISTRIBUTION SYSTEM
TO RECEIVER/TRANSMITTER 3
TO RECEIVER/TRANSMITTER 2
TO RECEIVER/TRANSMITTER 1
POWER ON COMMAND

CODE	DEFINITION
	A
ABVS	ANTENNA BEARING VALID SIGNAL
AMS	ACQUISITION MEMORY SIGNAL COMPLEMENT
ARP	AUXILIARY REFERENCE PULSE
ARP	AUXILIARY REFERENCE PULSE COMPLEMENT
ASC	ANTENNA SWITCH COMMAND
ASD	ANTENNA SWITCH DRIVE
ASI	ANTENNA SWITCH INPUT
AST	ANTENNA SWITCH TRIGGER
	B
BRD	BEARING SERIAL DATA
BRL	BEARING LOAD DATA
BVS	BEARING VALID SIGNAL
	C
CBM	COURSE BEARING MODULATION
CCW	CONTINUOUS CW
CCW (DET)	CONTINUOUS CW DETECTED
CLD	CLOCK DOWN COMPLEMENT
CLG	RANGE REGISTER SEARCH CLOCK
CLU	CLOCK UP COMPLEMENT
CMC	CHANNEL MODE CHANGE COMMAND
CMC	CHANNEL MODE CHANGE COMMAND COMPLEMENT
COB	CHANNEL OFFSET BIT
CRV	COMPOSITE RECEIVED VIDEO
	D
DSGC	DECODER SLOW GAIN CONTROL
DSMO	DECODER SAMPLE AND HOLD OUTPUT
DTP	DETECTED TRANSMITTER PULSE
	E
EBVS	EARLY BEARING VALID SIGNAL
ELG	EARLY LATE GATE
ERT	ENABLE RANGE TIME
	F
FBF	FINE BEARING FILTER
FBM	FINE BEARING MODULATION
FGC	FAST GAIN CONTROL
FHZ	15 HZ
FLS	FREQUENCY SYNTHESIZER LOCK STATUS
FPC	FIRST PULSE COMMAND
FSBAD	FREQUENCY SYNTHESIZER BUFFER AMPLIFIER DIVIDER
FSBAD	FREQUENCY SYNTHESIZER BUFFER AMPLIFIER OUTPUT
FSCSP	FREQUENCY SYNTHESIZER CARRIER SWITCHED PULSE
FSCV	FREQUENCY SYNTHESIZER CONTROL VOLTAGE
FSDBE	FREQUENCY SYNTHESIZER DIVIDE BY EIGHT
FSDSX	FREQUENCY SYNTHESIZER DIVIDER SIGNAL X
FSDSY	FREQUENCY SYNTHESIZER DIVIDER SIGNAL Y
FSEV	ERROR VOLTAGE
FSGTV	TRIGGER PULSE
FSPCW (DET)	PULSED CW (DETECTED)
FSS	STATUS
	H
HFC	HIGH FREQUENCY CLOCK
HFC	HIGH FREQUENCY CLOCK COMPLEMENT
HTN	135 HZ
	I
IAS	INTERNAL ANTENNA SWITCH
IBP	INTERNAL BLANKING PULSE
IDO	IDENTIFICATION TONE OSCILLATOR (1350 HZ)
IDT	IDENTIFICATION TONE
IDTI	IDENTIFICATION TONE INPUT
INH	INHIBIT
IPT	INTERROGATION PRETRIGGER
ITD	INITIAL TARGET DETECTOR
	L
LGT	LATE GATE TIME COMPLEMENT
LOS	LOCAL OSCILLATOR SIGNAL
	M
MAR	MAIN AND AUXILIARY RESET
MRP	MAIN REFERENCE PULSE COMPLEMENT
MRS	MAIN RESET SIGNAL
	N
NOS	NOISE LEVEL DETECTOR SIGNAL
	O
OMT	ONE MINUTE TIMER
	P
PCW	PULSED CW
PFB	POWER FEEDBACK
PPC	PRECISION PULSE CLOCK
PPS	PEAK POWER STATUS
PRC	PRF CHANGE COMMAND
PSS	POWER SUPPLY STATUS

CODE	DEFINITION
	R
RBO	RANGE LSB
RECRV	RECEIVER COMPOSITE RECEIVED VIDEO
RECST	RECEIVER SELF TEST
RESGA	RECEIVER GAIN
RESGB	RECEIVER GAIN BUFFERED
RETRG	RECEIVER BLANKING TRIGGER
RGL	RANGE LOAD DATA
RMP	RANGE MAXIMUM COMPLEMENT
RND	RANGE SERIAL DATA
RRC	RANGE RELAY COMMAND
RRS	RANGE RELAY SIGNAL
RSL	RECEIVED SIGNAL LINE
RTI	RANGE TRIGGER INHIBIT COMPLEMENT
RTI	RANGE TRIGGER INHIBIT
RTP	RANGE TRIGGER PULSE
RVH	RECEIVED VIDEO DIGITIZED
RVH	RECEIVED VIDEO DIGITIZED COMPLEMENT
RVS	RANGE VALID SIGNAL
	S
SAP	SAMPLE PULSE
SCDV	SYNTHESIZER CONTROL DIVIDER VOLTAGE
SDA	SERIAL DATA A
SDB	SERIAL DATA B
SFH	640 HZ
SGC	SLOW GAIN CONTROL
SHIFT	SHIFT COMPLEMENT
SIP	SCALED INCIDENT POWER
SIS	SAMPLE PULSE DELAY
SPC	SECOND PULSE COMMAND
SPI	SUPPRESSION PULSE INPUT
SPO	SUPPRESSION PULSE OUTPUT
SPP	SECOND PULSE OF PAIR
SPS	SINGLE PULSE SAMPLE
SRM	SHORT RANGE MEMORY
SRPV	SYNTHESIZER REFERENCE PULSE VOLTAGE
SRV	SCALED RECEIVED VIDEO
STC	SELF TEST COMMAND
STC	SELF TEST COMMAND COMPLEMENT
STM	SELF TEST MODULATION
STT	SELF TEST TRIGGER
STV	SELF TEST VALID
	T
TIS	TRANSMIT INHIBIT SIGNAL
TMS	TWENTY MILE SQUARE WAVE (4046 HZ)
TOC	TURN-ON COMMAND
T/R	TRANSMIT/RECEIVE MODE
TRC	TRANSMIT RECEIVE COMMAND
TRD	TRANSFER RANGE DATA COMPLEMENT
TSD	TRANSFER SYSTEM DELAY COMPLEMENT
TSH	270 HZ
TSL	TRANSMIT SIGNAL LINE
TTP	TRANSMITTER TRIGGER PULSE
	V
VCO	VOLTAGE CONTROLLED OSCILLATOR
	X
XAB	X MODE AUXILIARY BURST
XPP	X MODE PULSE PAIR
XYT	X/Y MODE/TEST COMMAND
	Y
YAB	Y MODE AUXILIARY BURST
YMC	Y MODE COMMAND
YPC	Y MODE COMMAND COMPLEMENT
YPP	Y MODE PULSE PAIR

A PUSHBUTTONS WILL REPLACE THUMBWHEELS AS FAILURES OCCUR

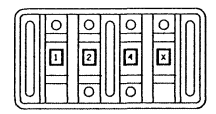

B NOT AVAILABLE FOR GOULD TACAN. (SEE SHEET 2 FOR DETAILS)
A NOT USED IN SHUTTLE APPLICATION
A SHADOWBOXED TM HAS RATES OF 1 S/S
A HARDWARE SELF-TEST FAIL LIMITS=0.0 +0.2 -0.0 MM RNG, 180 12.0 DEG BRG
SOFTWARE SELF-TEST FAIL LIMITS=0.0 +0.5 -0.0 MM RNG, 180 22.5 DEG BRG
A VD2, BITS 5 AND 6 OF V74H1549P1
11=IN RNG SELF TEST
A VD1, BITS 0 AND 1 OF V74H1549P1
00=VALID RNG DATA
A BITS 5 AND 6 OF V74H1531P1
11=IN BRG SELF TEST
A BITS 1 AND 2 OF V74H1530P1
00=VALID BRG DATA (<180°)
11=VALID BRG DATA (>180°)
A THIS SIGNAL DENOTES SELF-TEST COMMAND
NOTE: A SHADOWBOXED TM HAS RATES OF 12.5 S/S

TRANSCEIVER TO ANTENNA ASSIGNMENTS

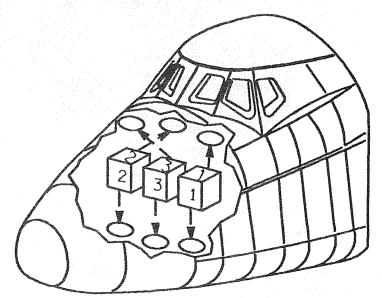

2 TAC

SIGNATURE	DATE	
DSGN L. DUMIS	10/23/78	NATIONAL AERONAUTICS AND SPACE ADMINISTRATION LYNDON B. JOHNSON SPACE CENTER HOUSTON, TEXAS
DR		
ENGR E. LIEBMAN		TACAN (GOULD)
ENGR	9/4/96	
APD	9/5/96	
APD	9/6/96	SPACE SHUTTLE / DVG NO 9.2
CADD	9/6/96	ALL
LTR E	PCN 6	126.5 X 34 / PAGE / SHEET 1 OF 2

BASIC REV E-6

S R Q P O N M L K J

RECEIVER
FRONT END
TUNABLE FILTER
MIXER
FIRST IF AMPLIFIER AND MIXER
SECOND IF AMPLIFIER AND VIDEO DETECTOR
SELF TEST
RECEIVED RF PULSES
(LOS)
(LOCAL OSC SIGNAL)
(63 MHZ OFFSET)
(BLANK DURING SELF TEST)
FIRST IF SIGNAL (63 MHZ)
SECOND IF SIG (11.5 MHZ)
RECEIVER GAIN BUFFERED SIGNAL
BLANKING TRIGGER
RECEIVER GAIN SIGNAL
CHANNEL SELECT BITS
CHANNEL OFFSET BIT
SELF TEST COMMAND
ACTIVATES SELF TEST
SELF TEST GATING
180° BRG SIG SIM
SELF TEST SIM DATA
FAST GAIN CONTROL
SLOW GAIN CONTROL
INTERNAL BLANKING PULSE
COMPOSITE RECEIVED VIDEO

DUPLEXER/FILTER
CIRCULATOR
TRANSMIT SIGNAL LINE (HIGH POWER RF PULSE)

FREQUENCY SYNTHESIZER
DETECTOR AND SELF TEST
CHANNEL SELECT DATA CONTROL DIVIDER
(CLOCK SIGNAL TO DECODE CHANNEL SELECT DATA)
CARRIER SWITCH PULSE
X 3 FREQ MULT
OSCILLATOR CONVERTER
(CONTROL VOLTAGE)
VCO/BUFFER AMPLIFIER
VOLTAGE REGULATOR
DIVIDE BY EIGHT
CONTINUOUS WAVE SIGNAL
PULSED RF SIGNAL
GATE TRIGGER PULSES
(FREQ SYN DIVIDE BY EIGHT SIG)
TRANSMIT-RECEIVE COMMAND
FREQ LOCK STATUS
FREQ SYNTH STATUS
TRANSMITTER TRIGGER PULSES
1MHZ PRECISION PULSE CLOCK SIGNAL

POWER AMPLIFIER/MODULATOR
CASCADED POWER AMPLIFIER STAGES
OUTPUT ASSY
PULSE MODULATION TRANSFORMER
FILAMENT REGULATOR ASSEMBLY
CAP ASSY
IND ASSY
SCR ASSY
SWITCH DRIVER
ONE MIN TIMER CKT
(ALLOW FOR TUBE WARMUP)
FIRST PULSE COMMAND
SECOND PULSE COMMAND
+140VDC

DATA PROCESSOR

INTERNAL CONTROL
X/Y MODE/TEST DATA
OPERATIONAL MODE DATA
CHANNEL SELECT DATA
(T/R OR AUTO)
(TEST MODE)
TRANSMIT INHIBIT SIGNAL
CHANGE MODE CHANNEL COMMAND
Y MODE CMD
T/R CMD
ANTENNA SWITCH SIGNAL
STC – ACTIVATES SELF TEST

ARINC INTERFACE
UPPER ANTENNA LOCK SIGNAL
LOWER ANTENNA LOCK SIGNAL
INTERNAL ANTENNA SW SIGNAL
UPPER ANTENNA LOCK
ANTENNA SELECT INHIBIT
ANTENNA BRG VALID SIGNAL
SHORT RANGE MEMORY
DATA LOAD CONTROL
16 BIT SHIFT REGISTER
SHIFT REGISTER CONTROL
TIMING SIGNAL
RNG DATA
BRG DATA
SDA (DIFF OUT
SDB (DIFF OUT
BRL BEARING
RGL RANGE DAT

SELF TEST
SIMULATED RANGE AND BEARING DATA
TEST VALUES: RANGE = 0 NM, BEARING = 180°
R/T STATUS
LOGIC '0' = BITE FAILURE
RTS GOES TO ZERO FOR DURATION OF BITE TEST (4-18 SECONDS)
RANGE DATA
BEARING DATA

SUPPRESSION PULSE OUTPUT
SUPPRESSION PULSE INPUT (BLANKING COMMAND)
(PRF) PULSE REPETITION RATE GENERATOR
NOISE GEN (JITTER)
TD 60 µs
COMMENCE INTERROGATION PULSE FIRING
147/27 OSC
SEARCH AT 147 PPS TRACK AT 27 PPS
PULSE GATING
10 KHZ
RANGE REGISTER REACHES LIMIT
RANGE REGISTER OUTPUT
SERIAL RANGE DATA
RANGE REGISTER CLOCK DRIVE UP/DOWN
SEARCH
TRACK
CLOSED ONLY FOR FIRST SEARCH

DECODER
CLOCK GENERATOR AND FILTER
10 MHZ GENERATOR
FREQUENCY DIVIDER
DELAY CIRCUIT
BLANKING SWITCH
ONE SHOT
ANALOG SWITCH
LOW PASS FILTER
SCALING CIRCUIT
135 HZ BP FILTER
SIGNAL COND/SAMPLE AND HOLD
PEAK DET
SAMPLE AND HOLD NETWORK
THRESHOLD AND CRV NOISE DET
PEAK POWER STATUS
RANGE RELAY SIGNAL
POWER FEEDBACK SIGNAL
NOISE LEVEL DETECTION SIGNAL
TIME BASE GENERATOR
RESET LOGIC
DECODING GATES
MAIN RESET
RANGE RELAY DECODER
PULSE PAIR DECODER
AGC AND REF PULSE GENERATOR
MAIN/AUX REF PULSE DETECTOR
MRP/ARP VALID
SLOW AGC FILTER
COARSE BRG AMPL
15 HZ BP FILTER
135 HZ BP FILTER
FGC AMPL

TRACK MEMORY AND VELOCITY GENERATOR
CHANGE PRF FROM 147 TO 27
SET TRACK MEMORY
SET ACQUISITION MEMORY SCHEDULE
CHANGE FROM SEARCH TO TRACK MODE
SET SHORT RANGE MEMORY
PROGRAMMER
3 OUT OF 5 ?
CONTINUE IN SEARCH MODE
REC RRS ?
RANGE REGISTER SEARCH CLOCK
ENABLE DELAY COUNTER
PRESET DELAY COUNTER
DELAY COUNTER ENABLE AND TIME COMPLETE
COUNTER TIME COMPLETE
THS 20 MILE SIG
IDENTIFICATION TONE

BEARING COMPUTATION
FINE BEARING MOD
COARSE BRG MOD
PHASE DETECTOR
SHIFT REGISTER
VCO
PEAK DETECTOR
ANT BRG VALID SIG
.5 SEC DELAY
3 SEC DELAY
BRG VALID SIGNAL
EARLY BRG VALID SIGNAL
15 HZ PHASE LOCK LOOP
135 HZ PHASE LOCK LOOP
BRG REGISTER
PHASE DETECTOR

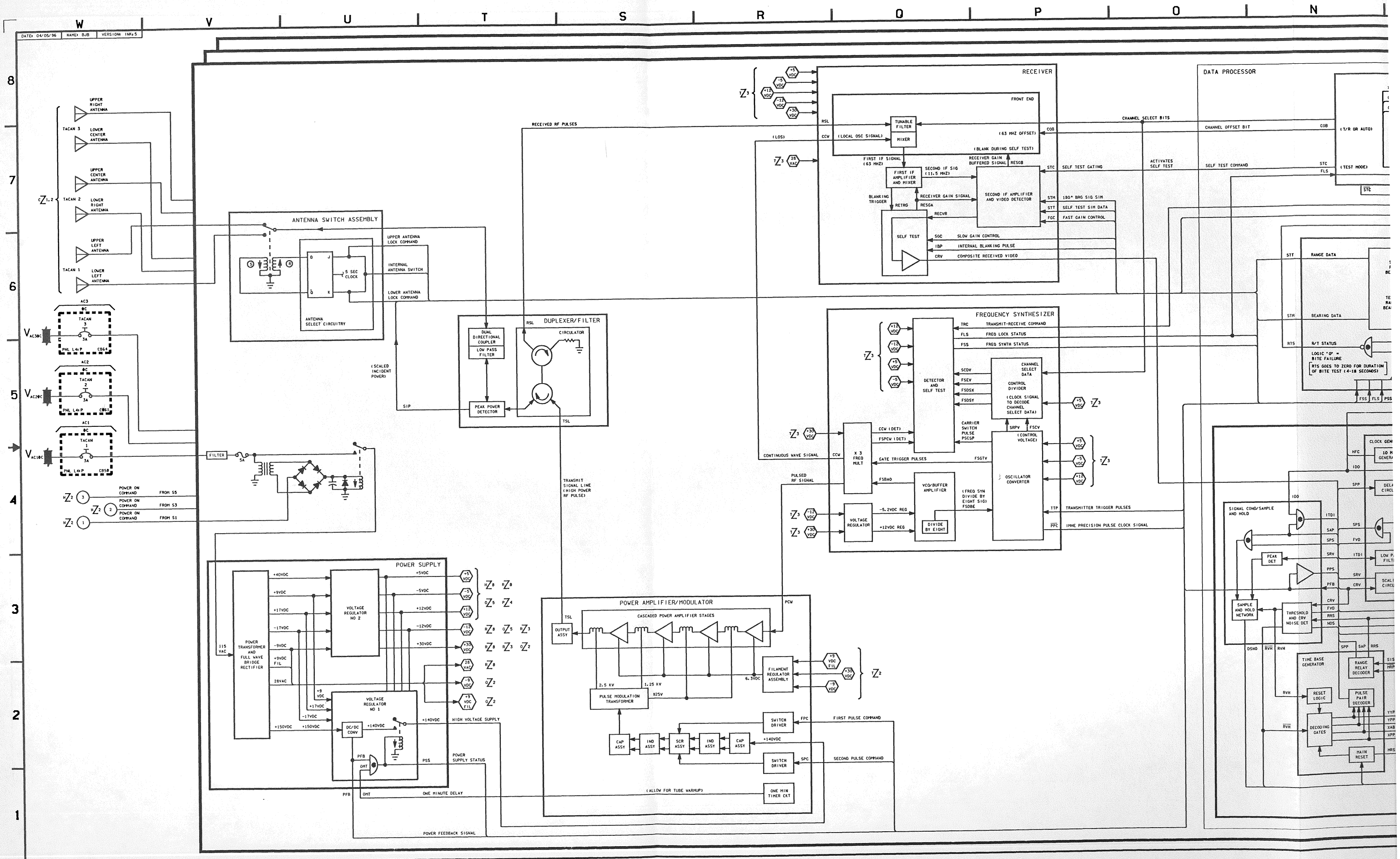

DATE: 04/05/96
NAME: BJB
VERSION: INK-5
W
V
U
T
S
R
Q
P
O
N
8
7
6
5
4
3
2
1
UPPER RIGHT ANTENNA
TACAN 3
LOWER CENTER ANTENNA
UPPER CENTER ANTENNA
TACAN 2
LOWER RIGHT ANTENNA
UPPER LEFT ANTENNA
TACAN 1
LOWER LEFT ANTENNA
AC3
TACAN 3
AC2
TACAN 2
AC1
TACAN 1
FILTER
POWER ON COMMAND
FROM S5
FROM S3
FROM S1
ANTENNA SWITCH ASSEMBLY
UPPER ANTENNA LOCK COMMAND
INTERNAL ANTENNA SWITCH
LOWER ANTENNA LOCK COMMAND
5 SEC CLOCK
ANTENNA SELECT CIRCUITRY
RECEIVED RF PULSES
DUPLEXER/FILTER
DUAL DIRECTIONAL COUPLER
LOW PASS FILTER
PEAK POWER DETECTOR
CIRCULATOR
(SCALED INCIDENT POWER)
TRANSMIT SIGNAL LINE (HIGH POWER RF PULSE)
RECEIVER
FRONT END
TUNABLE FILTER
MIXER
(LOCAL OSC SIGNAL)
(63 MHZ OFFSET)
(BLANK DURING SELF TEST)
FIRST IF SIGNAL (63 MHZ)
FIRST IF AMPLIFIER AND MIXER
SECOND IF SIG (11.5 MHZ)
RECEIVER GAIN BUFFERED SIGNAL
SECOND IF AMPLIFIER AND VIDEO DETECTOR
BLANKING TRIGGER
RECEIVER GAIN SIGNAL
SELF TEST
SLOW GAIN CONTROL
INTERNAL BLANKING PULSE
COMPOSITE RECEIVED VIDEO
CHANNEL SELECT BITS
SELF TEST GATING
ACTIVATES SELF TEST
180° BRG SIG SIM
SELF TEST SIM DATA
FAST GAIN CONTROL
DATA PROCESSOR
CHANNEL OFFSET BIT
SELF TEST COMMAND
(T/R OR AUTO)
(TEST MODE)
RANGE DATA
BEARING DATA
R/T STATUS
LOGIC "0" = BITE FAILURE
RTS GOES TO ZERO FOR DURATION OF BITE TEST (4-18 SECONDS)
FREQUENCY SYNTHESIZER
TRANSMIT-RECEIVE COMMAND
FREQ LOCK STATUS
FREQ SYNTH STATUS
DETECTOR AND SELF TEST
CHANNEL SELECT DATA
CONTROL DIVIDER
(CLOCK SIGNAL TO DECODE CHANNEL SELECT DATA)
CARRIER SWITCH PULSE
(CONTROL VOLTAGE)
OSCILLATOR CONVERTER
X 3 FREQ MULT
CONTINUOUS WAVE SIGNAL
GATE TRIGGER PULSES
PULSED RF SIGNAL
VCO/BUFFER AMPLIFIER
DIVIDE BY EIGHT
VOLTAGE REGULATOR
TRANSMITTER TRIGGER PULSES
1MHZ PRECISION PULSE CLOCK SIGNAL
SIGNAL COND/SAMPLE AND HOLD
PEAK DET
SAMPLE AND HOLD NETWORK
THRESHOLD AND CRV NOISE DET
TIME BASE GENERATOR
RANGE RELAY DECODER
RESET LOGIC
PULSE PAIR DECODER
DECODING GATES
MAIN RESET
POWER SUPPLY
POWER TRANSFORMER AND FULL WAVE BRIDGE RECTIFIER
VOLTAGE REGULATOR NO 2
VOLTAGE REGULATOR NO 1
DC/DC CONV
HIGH VOLTAGE SUPPLY
POWER SUPPLY STATUS
ONE MINUTE DELAY
POWER FEEDBACK SIGNAL
POWER AMPLIFIER/MODULATOR
CASCADED POWER AMPLIFIER STAGES
OUTPUT ASSY
PULSE MODULATION TRANSFORMER
FILAMENT REGULATOR ASSEMBLY
SWITCH DRIVER
FIRST PULSE COMMAND
SECOND PULSE COMMAND
CAP ASSY
IND ASSY
SCR ASSY
ONE MIN TIMER CKT
(ALLOW FOR TUBE WARMUP)

BASIC REV E-6

DATE: 03/01/96	NAME: VSH	VERSION: BPT: 4
DATE: 03/13/96	NAME: VSH	VERSION: BPT: 5
DATE: 04/08/96	NAME: BJB	VERSION: INK: 2

TRANSCEIVER TO ANTENNA ASSIGNMENTS

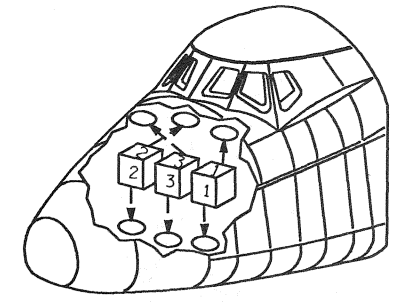

A NOT USED IN SHUTTLE APPLICATION

A ACTUAL BLANKING PULSE CIRCUIT

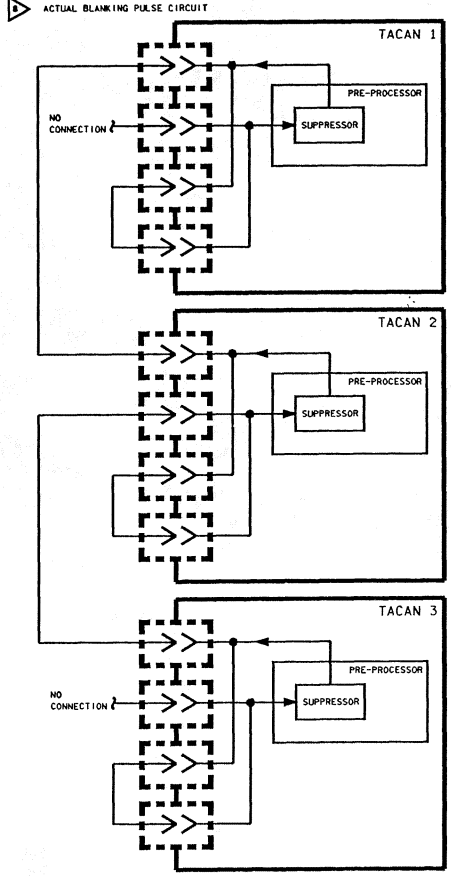

7. HARDWARE SELF TEST FAIL LIMITS = 0.0 +0.2 -0.0 NM RNG, 180 ±2.0 DEG BRG

SOFTWARE SELF-TEST FAIL LIMITS = 0.0 +0.5 -0.0 NM RNG, 180 ±2.5 DEG BRG

A PUSHBUTTONS WILL REPLACE THUMBWHEELS AS FAILURES OCCUR

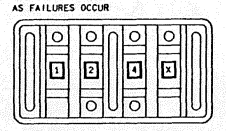

A WD 2, BIT 7 OF V74M1549P:
0 = SUPPRESSION PULSES "HOT" DETECTED (FAILURE CONDITION WHEN OTHER TACAN'S ARE TRANSMITTING)

A WD 2, BIT 4 OF V74M1549P:
1 = BITE FAILURE

A WD2, BITS 5 AND 6 OF V74M1549P:
11 = IN RNG SELF TEST

A WD1, BITS 0 AND 1 OF V74M1549P:
00 = VALID RNG DATA

A BITS 5 AND 6 OF V74M1551P:
11 = IN BRG SELF TEST

A BITS 1 AND 2 OF V74M1530P:
00 = VALID BEARING DATA (<180 DEG)
11 = VALID BEARING DATA (>180 DEG)

A SHADOWBOXED TM HAS RATES OF 1 S/S

NOTES: A SHADOWBOXED TM HAS RATES OF 12.5 S/S

2 TAC 2

SIGNATURE	DATE	NATIONAL AERONAUTICS AND SPACE ADMINISTRATION LYNDON B. JOHNSON SPACE CENTER HOUSTON, TEXAS	
DSGN M. GILLESPIE	8/20/93		
DR		TACAN (COLLINS)	
ENGR E. LIEBHAN			
ENGR			
APP			
APP		SPACE SHUTTLE	DWG NO 9.2
CADD K. KNOWLES		ALL	
LTR E	PCN 6	104.5 X 34	PAGE SHEET 2 OF 2

BASIC REV E-6

Ex 04/08/96 | NAME: BJB | VERSION: INK=2

TACAN 3
TACAN 2
TACAN 1

UPPER RIGHT ANTENNA
TACAN 3 — LOWER CENTER ANTENNA
UPPER CENTER ANTENNA
TACAN 2 — LOWER RIGHT ANTENNA
UPPER LEFT ANTENNA
TACAN 1 — LOWER LEFT ANTENNA

EQUIVALENT BLANKING PULSE CIRCUIT

RECEIVER VIDEO
SUPPRESSION OUT
SUPPRESSION IN
MODULAR TRIGGER

PRE-PROCESSOR BLOCK DIAGRAM

SUPPRESSOR
PEAK DETECTOR
A/D LATCH
PULSE VALIDATION
TIME LATCH
TAG LATCH
CONTROL LATCH
2-PORT MEMORY 2K
SEQUENCER
INTERNAL AGE I/O
SERIAL I/O
DAC
INTERNAL AGC
RECEIVER TUNE
PROCESSOR INTERFACE
INTERNAL SERIAL CONTROL
SERIAL DATA OUT

CPU BLOCK DIAGRAM

PROCESSOR INTERFACE
IDENT TONE GENERATOR
IDENT OK
STATION ID TONE
ROM 32K
SYNTHESIZER INTERFACE
SYNTH TUNING
EEPROM 0.25K
ANT SELECT/ CONTROL
OUTPUT LATCH
SERIAL DATA
RT STAT FLAGS
RAM 2K
2-PORT MEMORY 2K
CPU 280D2
OUTPUT LATCH
PROGRAM PINS
ANT SEL CONTROL
U/L ANT SEL
INPUT LATCH

RF SECTION BLOCK DIAGRAM

DETECTED/RECEIVER VIDEO
SUPPRESSION
INTERNAL AGC
RECEIVER TUNE
IF AMPLIFIER
SYNTHESIZER
RECEIVER FRONT-END
RECEIVER TUNE
63 MHz IF
RCVR DISRUPTOR
VCO TUNING V
256 TO 288 VCO FREQ
LO
962 TO 1213 MHz RCVR RF FROM ANTENNA
TR CONTROL
VCO/ BUFFER
TR SWITCH
RF TO ANTENNA SWITCH
LOWER LEFT ANTENNA
UPPER LEFT ANTENNA
MODULAR TRIGGER
+70V
MODULATOR
PREDRIVER
DRIVER
FINAL
POWER AMPLIFIER
ANT SELECT/ CONTROL
POWER MONITOR (SELF TEST)

MDM INTERFACE

MDM BIT ENABLE
SERIAL DATA OUT (CPU)
SERIAL DATA OUT (PRE-PROCESSOR)
SERIAL DATA INTERFACE CIRCUIT
SERIAL DATA (RANGE/BEARING)
RT STAT FLAGS
POWER ON STATUS INTERFACE CIRCUIT
POWER ON STATUS
MODIFIED AGC DATA
DIGITAL/ANALOG CONVERTER
AGC SCALING AND INTERFACE CIRCUIT
AGC SIGNAL
MDM TEST SIGNAL
TEST STAT MON INTERFACE CIRCUIT
TEST STATUS MONITOR
UPPER/LOWER ANTENNA SELECT
U/L ANT SEL INTERFACE CIRCUIT
UPPER/LOWER ANTENNA SELECT
ANTENNA SELECT CONTROL
ANTENNA SW SELECT INTERFACE CIRCUIT
ANTENNA SWITCH INHIBIT
ANTENNA CONTROL (OPC/SWITCH → TACAN)
SERIAL DATA IN
SHIFT REGISTER
SERIAL DATA INTERFACE CIRCUIT
SERIAL DATA IN

POWER SUPPLY

FILTER
FILTER
TRANSFORMER
PULSE WIDTH MODULATOR
ERROR AMP
RECTIFIER/ FILTER
+5VDC
COMPARATOR
5V MON
+70V
+15V
-15V
+22V
-22V
+19V
-19V
+31V
-5V
+5V

V_{PNC} 016 — TACAN 3 — 5A — +28V — PNL 016 — CB32
V_{PNB} 015 — TACAN 2 — 5A — +28V — PNL 015 — CB42
V_{PNA} 014 — TACAN 1 — 5A — +28V — PNL 014 — CB40

POWER ON COMMAND, SIGNAL
POWER ON COMMAND, GROUND

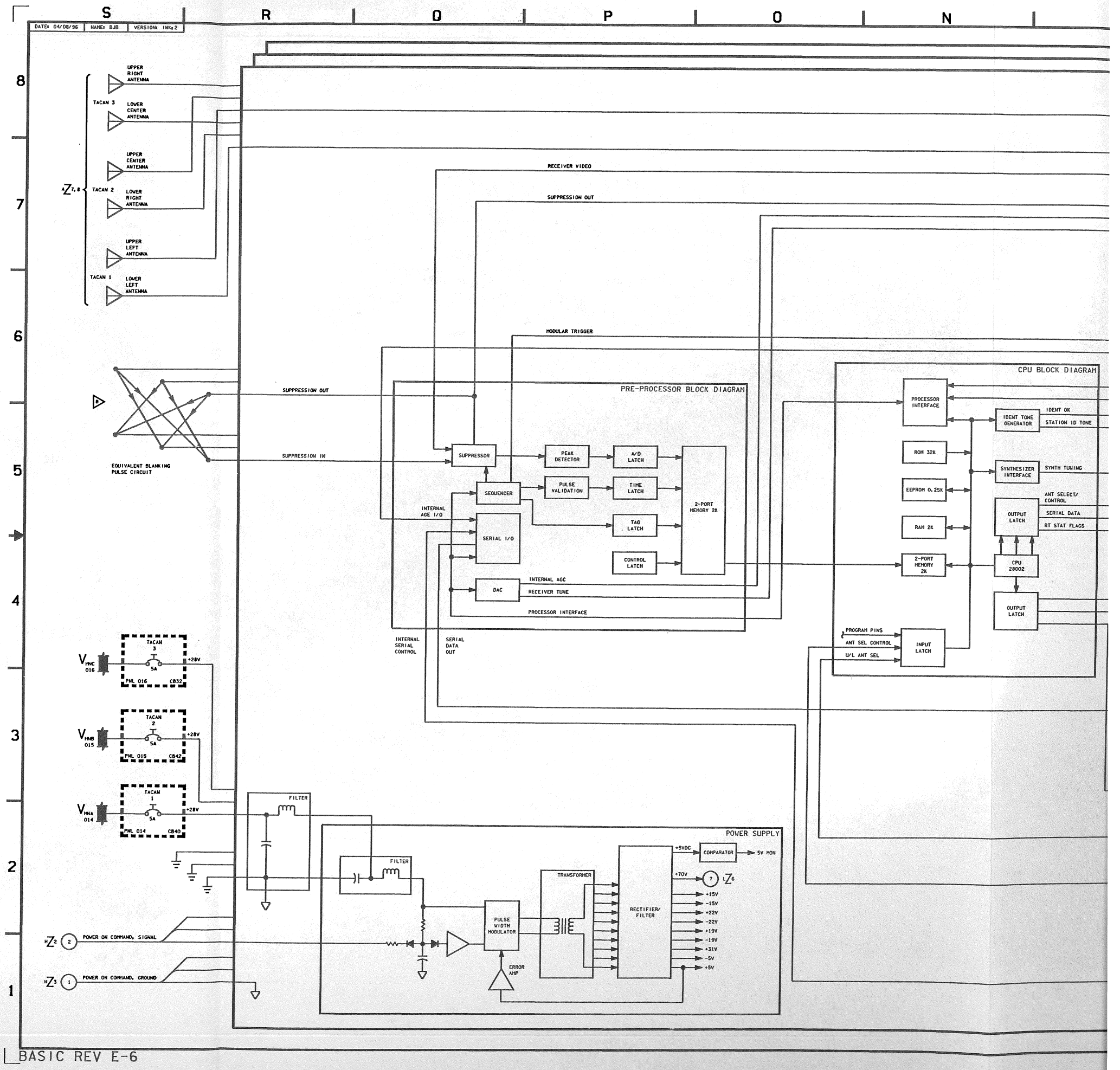

S
R
Q
P
O
N
DATE: 04/08/96
NAME: BJB
VERSION: INK: 2
UPPER RIGHT ANTENNA
TACAN 3
LOWER CENTER ANTENNA
UPPER CENTER ANTENNA
TACAN 2
LOWER RIGHT ANTENNA
UPPER LEFT ANTENNA
TACAN 1
LOWER LEFT ANTENNA
EQUIVALENT BLANKING PULSE CIRCUIT
RECEIVER VIDEO
SUPPRESSION OUT
MODULAR TRIGGER
SUPPRESSION OUT
SUPPRESSION IN
PRE-PROCESSOR BLOCK DIAGRAM
SUPPRESSOR
SEQUENCER
SERIAL I/O
DAC
PEAK DETECTOR
PULSE VALIDATION
A/D LATCH
TIME LATCH
TAG LATCH
CONTROL LATCH
2-PORT MEMORY 2K
INTERNAL AGE I/O
INTERNAL AGC
RECEIVER TUNE
PROCESSOR INTERFACE
INTERNAL SERIAL CONTROL
SERIAL DATA OUT
CPU BLOCK DIAGRAM
PROCESSOR INTERFACE
IDENT TONE GENERATOR
IDENT OK
STATION ID TONE
ROM 32K
SYNTHESIZER INTERFACE
SYNTH TUNING
EEPROM 0.25K
OUTPUT LATCH
ANT SELECT/ CONTROL
SERIAL DATA
RT STAT FLAGS
RAM 2K
2-PORT MEMORY 2K
CPU 28002
OUTPUT LATCH
PROGRAM PINS
ANT SEL CONTROL
U/L ANT SEL
INPUT LATCH
TACAN 3
TACAN 2
TACAN 1
+28V
PNL 016
PNL 015
PNL 014
CB32
CB42
CB40
FILTER
FILTER
POWER SUPPLY
PULSE WIDTH MODULATOR
ERROR AMP
TRANSFORMER
RECTIFIER/ FILTER
+5VDC
COMPARATOR
5V MON
+70V
+15V
-15V
+22V
-22V
+19V
-19V
+31V
-5V
+5V
POWER ON COMMAND, SIGNAL
POWER ON COMMAND, GROUND

BASIC REV E-6

DATE: 11/9/87	NAME: MAG	VERSION# INK: 5
DATE: 08/20/90	NAME: MAG	VERSION# INK: 6
DATE: 08/29/90	NAME: VSH	VERSION# INK: 7

RADAR ALTIMETER 2

RADAR ALTIMETER 1

RANGE COMPUTER

DIGITAL CONVERTER

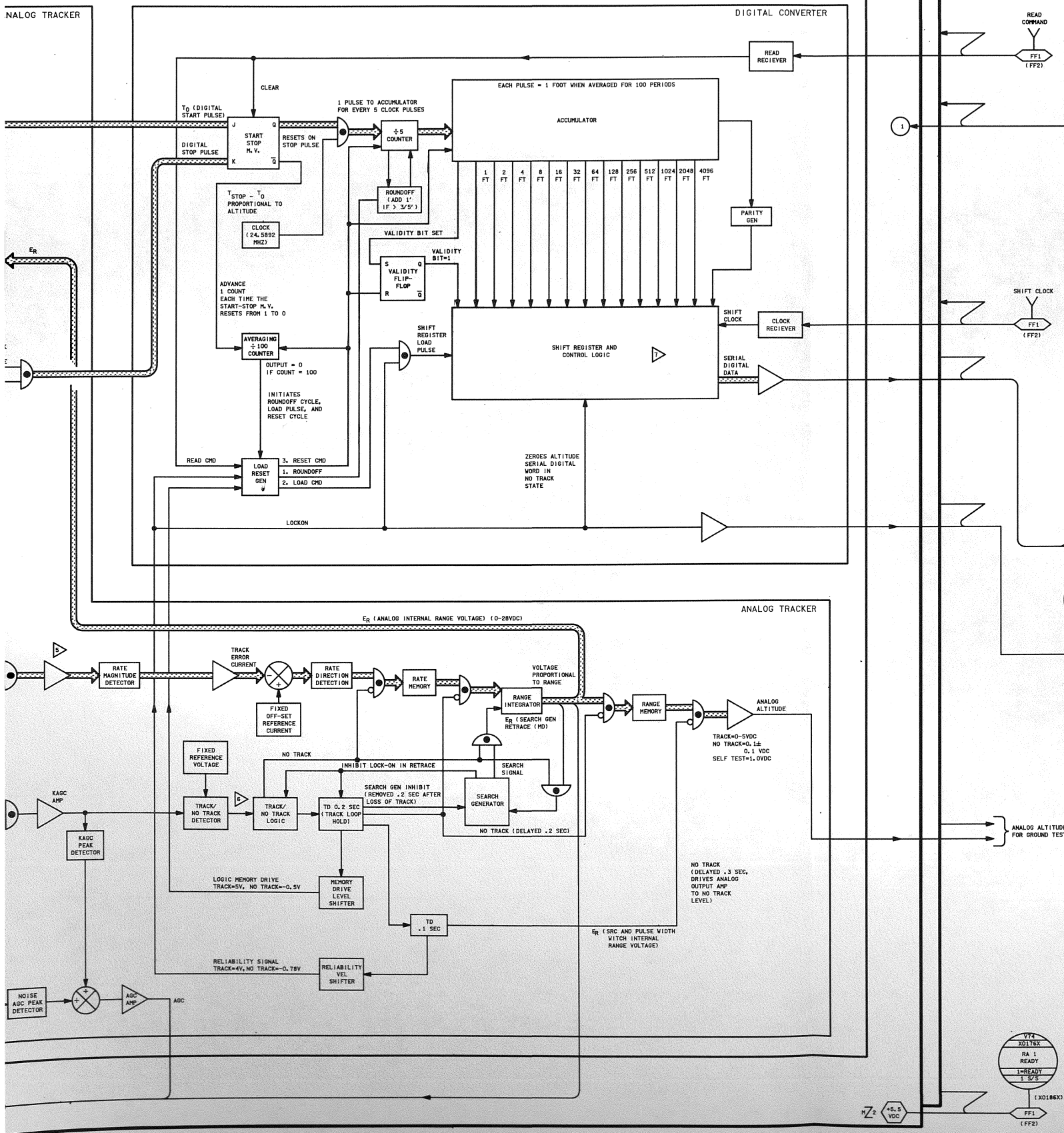

READ COMMAND — FF1 (FF2)

RA 1 TEST V74X0174X (X0184X) — FF1 (FF2)

SHIFT CLOCK — FF1 (FF2)

V74 X1803B — RA 1 PARITY — 1=ODD 1 S/S — (X1853B) — FF1 (FF2)

V74 H1804B — RA 1 ALTITUDE — 0-5000' 1 S/S C — (H1854B) — FF1 (FF2)

V74 X1805B — RA 1 VALIDITY — 0=FAIL 1 S/S C — (X1855B) — FF1 (FF2)

V74 X1806B — RA 1 CONTROL — 0=FAIL 1 S/S — (X1856B) — FF1 (FF2)

V74 X0172X — RA 1 LOCK ON — 1=LOCK ON 1 S/S — (X0182X) — FF1 (FF2)

V74 X0176X — RA 1 READY — 1=READY 1 S/S — (X0186X) — FF1 (FF2)

SEARCH AND AQUISITION WAVEFORMS AND TIMING

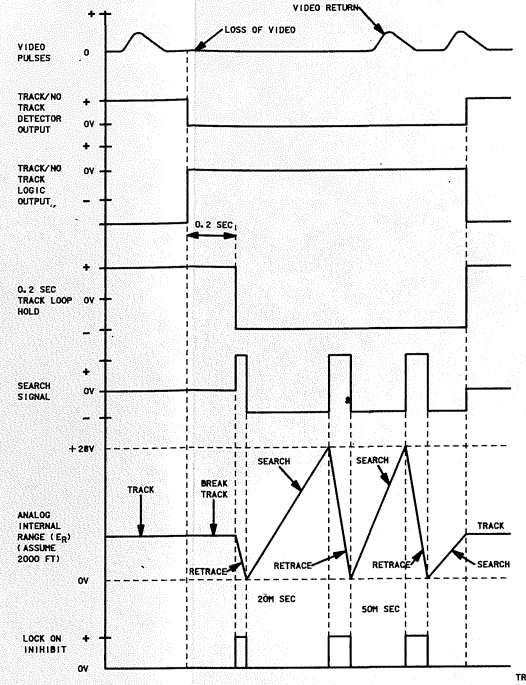

ANALOG TRACKER WAVEFORMS AND TIMING

NOTE: ASSUME THAT ALTITUDE IS STEADILY INCREASING

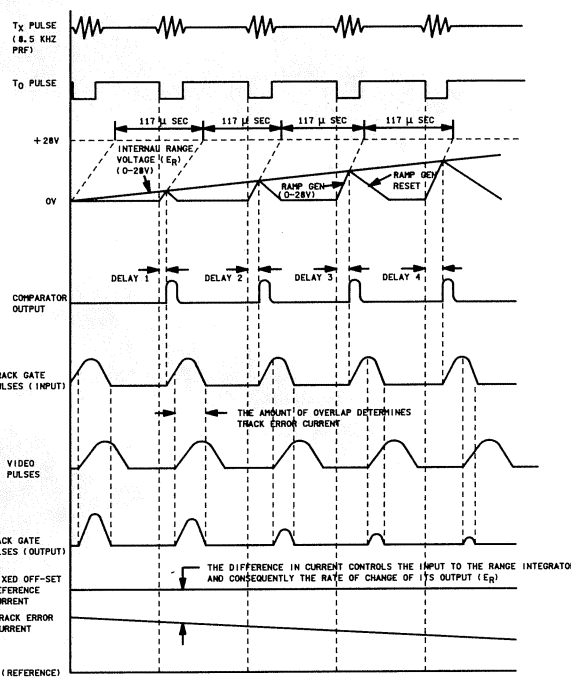

DIGITAL TIMING RELATIONSHIPS

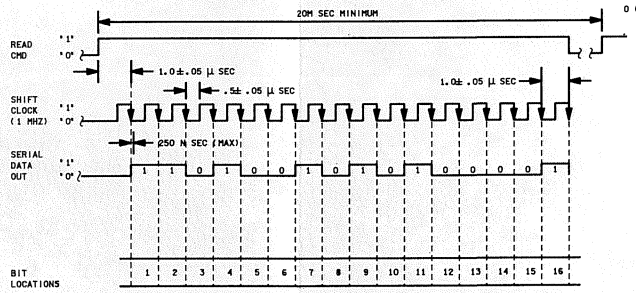

PARENT WORD FORMAT (RDR ALT NO 1-V74 H1801P/RDR ALT NO 2-V74 H1851P)

MEASUREMENT NO	BIT	DESIGNATION	LOGICAL VALUE (TRUE)
V74X1806B/X1856B	1	CONTROL	1(ALWAYS)
V74X1805B/X1854B	2	VALIDITY	1=VALID
V74H1804B/H1854B	3	DATA LSB	1=1 FOOT
	4	DATA	1=2 FEET
	5	DATA	1=4 FEET
	6	DATA	1=8 FEET
	7	DATA	1=16 FEET
	8	DATA	1=32 FEET
	9	DATA	1=64 FEET
	10	DATA	1=128 FEET
	11	DATA	1=256 FEET
	12	DATA	1=512 FEET
	13	DATA	1=1024 FEET
	14	DATA	1=2048 FEET
	15	DATA MSB	1=4096 FEET
V74X1803B/X1853B	16	PARITY ODD	1=ODD PARITY

NZ8 — SENSITIVITY RANGE CONTROL (SRC) CONTROLS THE IF AMP GAIN AS A FUNCTION OF ALTITUDE. IT PREVENTS IF AMP SATURATION AT VERY LOW ALTITUDES VIA THE FOLLOWING CONTROL LEVELS:
0-28 FT: SRC HAS MAX CONTROL IN REDUCING IF AMP GAIN
28-140 FT: SRC CONTROL DECREASES LINEARLY
> 140 FT: SRC NO LONGER CONTROLS IF AMP GAIN

OZ8 — DIODE SWITCH GATES PORTION OF LOCAL OSCILLATOR SIGNAL TO RF INPUT LINE TO DEVELOP A SIMULATED SELF TEST INPUT SIGNAL WHICH IS THEN PROCESSED AS AN RF RETURN SIGNAL

NZ5 — SELF TEST TURNS ON TRANSISTOR WHICH PROVIDES A RADIATION INHIBIT FUNCTION BY DRAWING SUFFICIENT BIAS CURRENT TO CHANGE THE PLATE PULSE WIDTH TO NEARLY ZERO

OZ5 NOTES: — T_O IS A TIME REFERENCE PULSE OBTAINED BY INSERTING A VOLTAGE-CURRENT PICK-OFF INTO THE TRANSMITTER CAVITY OSCILLATOR. IT IS USED TO START THE TIMING SEQUENCE IN THE RANGE COMPUTER CIRCUITS

3 RDR ALT

SIGNATURE		DATE	NATIONAL AERONAUTICS AND SPACE ADMINISTRATION LYNDON B. JOHNSON SPACE CENTER HOUSTON, TEXAS
DSGN			
DR	J D HOLMES	5-2-79	RADAR ALTIMETER
ENGR	M.T. SEVERANCE	8/17/90	
ENGR		7-30-90	
APP		8/29/90	
APP		9/4/90	SPACE SHUTTLE — DWG NO 9.3
CHK(PLAN)		9-11-90	ALL
LTR E	PCN		93.5 X 34 — PAGE — SHEET 1 OF 1

BASIC REV E

DATE: 08/29/90 | NAME: VSH | VERSION: INK 7

RADAR ALTIMETER NO 1 RECEIVER ANTENNA

RADAR ALTIMETER NO 2 RECEIVER ANTENNA

RECEIVER

SELF TEST TARGET

LOCAL OSCILLATOR (4300 MHZ CW)

SRC

SRC AMP AND CONTROL

DIODE SWITCH

AGC

BAND PASS FILTER

MIXER

BIPOLAR VIDEO PULSES

IF AMP (5 STAGE)

FULL WAVE VIDEO DETECTOR

UNIPOLAR VIDEO PULSES

VIDEO AMP AND FOLLOWER

VIDEO PULSES

RADAR ALTIMETER NO 2 TRANSMITTER ANTENNA (C-BAND) (4300 MHZ CW PULSE MODULATED AT 8.5 KHZ)

RADAR ALTIMETER NO 1 TRANSMITTER ANTENNA (C-BAND) (4300 MHZ CW PULSE MODULATED AT 8.5 KHZ)

TRANSMITTER

PLATE PULSE MODULATOR

PLATE PULSE 8.5 KHZ

PULSE FORMING NETWORK

PULSE PWR GEN

SELF-TEST

PLATE PULSE CAVITY OSC

PRF GENERATOR

TIME REFERENCE PULSE

VOLTAGE DIFFERENTIATOR AND PULSE SHAPER

PRF GENERATOR (8.5 KHZ UNIJUNCTION OSCILLATOR)

PULSE WIDTH SWITCH

MN B

RADAR ALTH

PML 015

CB22

RADAR ALTIMETER

ON

OFF

V_{ESS2CA}

5.1K

V74 S0185E RA 2 ON 1=ON 1 S/S

PML 08

MN A

RADAR ALTH

PML 014

CB21

V_{ESS1BC}

V74 S0175E RA 1 ON 1=ON 1 S/S

01 DATA-NO MDM NOTE NEEDED

POWER SUPPLY

EMI FILTER

TRANSIENT FILTER

+28 VDC

SWITCHING REGULATOR

OSCILLATOR INVERTER

32 VP-P SQUARE WAVE 15 KHZ

T1

TD 10 SEC

ANALOG TRACKER

T_0 TIME REFERENCE PULSE

T_0 (DIGITAL START PULSE)

DIGITAL STOP PULSE

RAMP FLIP-FLOP

RAMP GEN

COMPARATOR (OUTPUTS PULSE WHEN RAMP GEN VOLTAGE EQUALS E_R)

GATE PULSE GEN

KAGC GATE PULSE

TRACK GATE PULSE

SELF TEST

SELF TEST TARGET

1000 FT SELF TEST DELAY CIRCUIT

SELF TEST GATE OPEN

RATE MAGNITUDE DETECTOR

TRACK ERROR CURRENT

FIXED REFERENCE VOLTAGE

TRACK/NO TRACK DETECTOR

KAGC AMP

KAGC PEAK DETECTOR

VIDEO FOLLOWER

VIDEO PULSES

NOISE AGC PEAK DETECTOR

AGC AMP

AGC

READ CMD

BASIC REV E

A		
DATE= 10/12/87	NAME= TMV	VERSION= BPT: 4
DATE= 11/19/87	NAME= BJT	VERSION= INW: 11
DATE= 08/22/90	NAME= SEV	VERSION= INW: 12

TRACKER/DECODER 3

TRACKER/DECODER 2

TRACKER/DECODER 1

TRACKING GATE

ACCUMULATOR GATE (AGATE)

CLEAR A (CLRA)

T CTR CONTR

TCTR

TCLK TO 16.2048

B REG

MAX/MIN INTERVAL DET

I CTR CONTR

ICTR

L REG

C CTR CONTR

C CTR

CC0 CC1 CC2 CC4

RIL

INTH

CLR

ICLK

I CTR CLOCK

AZIMUTH SIGN

FR/FL

DATA PROCESSOR

A-CTR CLOCK

STROBE A

AUP

ADVN

A-CTR (SUM OF INTERVALS)

DATA TAPS

A=0

Q-REGISTER

SUM OF INTERVALS / NUMBER OF INTERVALS = AVERAGE INTERVAL

Q16(COMP)

LDS

SQE

Q-REG CONTROL

ADDER

(COMP)

PROGRAMMER

CLOCK BUFFER

4 MHZ

DCLK

D CTR CLOCK

PSD1

PRESET D CTR TO 1

CLEAR D

LOAD D

D=8

D=128

D-COUNTER (NUMBER OF INTERVALS)

D=4

D=6

EOBP

PROG CONTROL

NO. OF INTERVALS ≥ 8

NO. OF INTERVALS ≥ 128

COMPUTE

PROGRAM MEMORY

ANDIA

START INTERROGATE MODE (SITM)

DSG

ELG

VALID BEAM (VLBM)

END OF VALID DATA (EVLDT)

ANGLE FLAG GEN

CSPER

2MS

EVLDT

AZG

VLBM

ELG

15

17

8MS

AZ FLAG GEN

TEST: NO DATA FOR 0.38 SEC.

AZ MULTIBEAM DETECTOR

TEST: 2 BEAMS WITHIN 64MS

EL MULTIBEAM DETECTOR

TEST: 2 BEAMS WITHIN 64MS

EL FLAG GEN

TEST: NO DATA FOR 0.38 SEC.

AZIMUTH FLAG (AZFLG)

MULTI-BEAM (MULTI)

ELEVATION FLAG (ELFLG)

BIT ON

MDM INTERFACE

MDM DATA (ANGLES AND DISTANCE)

ANGLE OR DISTANCE DATA AVAILABLE

AZIMUTH GATE

ELEVATION GATE

DISTANCE GATE

DISTANCE SHIFT REGISTER

ELEVATION SHIFT REGISTER

AZIMUTH SHIFT REGISTER

FR/FL

AZIMUTH FLAG (AZIMUTH VALIDITY)

ELEVATION FLAG (ELEVATION VALIDITY)

BIT 2 (ANGLE OR RANGE TEST)

BITE FLAG (AGC/XTAL CURRENT FAIL)

DISTANCE FLAG (RANGE VALIDITY)

PARITY

DATA SELECTOR AND MULTIPLEXER

MANCHESTER CODE GEN

SERIAL DATA

PARITY GEN

DATA WORD

TIMING AND CONTROL

RECEIVER

MESSAGE DISCRETE (GATE)

WORD DISCRETE (GATE)

CLOCK

8 MHZ OSC

FREQUENCY DIVIDER

8 MHZ

4 MHZ

2 MHZ

1 MHZ

.5 LS

.25 LS

.125 LS

1 LS

2 LS

4 LS

8 LS

16 LS

32 LS

64 LS

128 LS

.25 MS

.5 MS

1 MS

2 MS

4 MS

8 MS

+5 VDC

+15 VDC

SELF TEST DATA VALUES

TIME	RANGE	ELEVATION	AZIMUTH
0-3.2 SEC	15.2 N MI ± 0.2 N MI	6.0 DEG ± 0.1 DEG	+ 3 DEG ± 0.1 DEG
3.2-6.4 SEC	15.2 N MI ± 0.2 N MI	6.0 DEG ± 0.1 DEG	- 3 DEG ± 0.1

V74 X10128 MLS 1 AZ DATA -32 TO +32 DEG 1 S/S C (X1112B) (X1212B) FF1 (FF2) (FF3)

V74 X10138 MLS 1 AZ TEST 1 = TEST 1 S/S C (X1113B) (X1213B) FF1 (FF2) (FF3)

V74 X10148 MLS 1 AZ VALIDITY 1=NONVALID 1 S/S C (X1114B) (X1214B) FF1 (FF2) (FF3)

V74 X10318 MLS 1 EL XT CUR FAIL 1 = FAIL 1 S/S C (X1131B) (X1231B) FF1 (FF2) (FF3)

V74 X10328 MLS 1 EL DATA 0 TO 32 DEG 1 S/S C (X1132B) (X1232B) FF1 (FF2) (FF3)

V74 X10338 MLS 1 EL TEST 1 = TEST 1 S/S C (X1133B) (X1233B) FF1 (FF2) (FF3)

V74 X10348 MLS 1 EL VALIDITY 1=NONVALID 1 S/S C (X1134B) (X1234B) FF1 (FF2) (FF3)

V74 X10518 MLS 1 RNG XT CUR FAIL 1 = FAIL 1 S/S C (X1151B) (X1251B) FF1 (FF2) (FF3)

V74 X10528 MLS 1 RNG DATA 0 TO 20.7 NM 1 S/S C (X1152B) (X1252B) FF1 (FF2) (FF3)

V74 X10538 MLS 1 RNG TEST 1 = TEST 1 S/S C (X1153B) (X1253B) FF1 (FF2) (FF3)

V74 X10548 MLS 1 RNG VALIDITY 1=NONVALID 1 S/S C (X1154B) (X1254B) FF1 (FF2) (FF3)

MESSAGE REQUEST FF1 (FF2) (FF3)

WORD REQUEST FF1 (FF2) (FF3)

MLS 1 TEST V74K0108X (K0118X) (K0128X) FF1 (FF2) (FF3)

1. NOMINAL MLS HARDWARE LIMITS: AZ -15 TO +15 DEG (GND STA COVERAGE); EL 0 TO 30 DEG (GND STA COVERAGE); RNG 0 TO 19.9 NM (NAV SET LIMIT)
2. MLS FDIR TRACKING TESTS LIMITS: RANGE 2000 FT; AZIMUTH 0.5 DEG; ELEVATION 0.4 DEG
3. MLS WARMUP TIME: 3 MIN
4. THE PARENT WORDS OF THE PARAMETERS SHOWN, ARE ON THE DOWNLIST 1 S/S MLS1(2,3) AZ WORD V74M101OP(1110P, 1210P) EL WORD V74M103OP(1130P, 1230P) RNG WORD V74M105OP(1150L, 1250P)

NOTES:

CODE	DEFINITION
	A
ACQ	ACQUISITION MODE
AGATE	ACCUMULATOR GATE
AGC	AUTOMATIC GAIN CONTROL
ANDIA	ANGLE OR DISTANCE AVAILABLE
AZFLG	AZIMUTH FLAG
AZG	AZIMUTH GATE
AZV	AZIMUTH VIDEO
	B
BFLG	BUILT IN TEST FLAG
BIT	BUILT IN TEST
BIT 2	BUILT IN TEST 2
BITON	BUILT IN TEST ON
BITTRIG	BUILT IN TEST TRIGGER PULSES
	C
CC1	CONTROL COUNTER 1 OUTPUT
CC2	CONTROL COUNTER 2 OUTPUT
CC4	CONTROL COUNTER 4 OUTPUT
CCG	CONTROL COUNTER GATE
CHN 1	CHANNEL 1
CHN 2	CHANNEL 2
CHN 3	CHANNEL 3
CHN 4	CHANNEL 4
CHN 5	CHANNEL 5
CHN 6	CHANNEL 6
CHN 7	CHANNEL 7
CHN 8	CHANNEL 8
CHN 9	CHANNEL 9
CHN 10	CHANNEL 10
CLRB	CLEAR B REGISTER
CLRA	CLEAR A REGISTER
CLRD	CLEAR D COUNTER
CLR11	CLEAR I COUNTER 1
Cn	CONTROL PULSE *n
COMP	COMPUTE MODE
CSA	CHANNEL SELECT A INPUT
CSB	CHANNEL SELECT B INPUT
CSC	CHANNEL SELECT C INPUT
CSP	CHANNEL SELECT PARITY INPUT
CSPER	CHANNEL SELECT PARITY ERROR
	D
D2	DATA COUNTER 2 BIT
D4	DATA COUNTER 4 BIT
D = 4	DATA COUNTER EQUALS 4
D = 6	DATA COUNTER EQUALS 6
DAGC	DISTANCE AGC
DATRG	DATA TRIGGER
DATT	DATA TAP
DCLK	DATA COUNTER CLOCK
DIV	DIVISION OPERATION
Dn	DATA COUNTER BINARY BIT n
DPCB	DATA PROCESSOR CONTROL B BIT
DSEVD	DISTANCE END OF VALID DATA
DSF128	DISTANCE FLAG COUNTER 128 BIT
DSF256	DISTANCE FLAG COUNTER 256 BIT
DSFLG	DISTANCE FLAG
DSG	DISTANCE GATE
DSGT	DEVELOP SQUITTER
DSSUB	DISTANCE SUBTRACT OPERATION
DSV	DISTANCE VIDEO
	E
ELG	ELEVATION GATE
ELFLG	ELEVATION FLAG
ELV	ELEVATION VIDEO
EOBCLK	END OF BEAM CLOCK
EOBP	END OF BEAM PULSE
EVLDT	END OF VALID DATA
	F
FR/FL	(HIGH) FLY RIGHT, OR (LOW) FLY LEFT
	G
GAGC	GLIDESLOPE AGC
GMLV	GATED HIGH-LEVEL VIDEO
GINP	GATED INTERROGATE PULSE
GINT 2	GATED INTERROGATE 2 PULSE
GINT 2'	GATED INTERROGATE *2 PULSE
GZLLV	GATED 2 LOW LEVEL VIDEO
GRSE	GATED RESET

CODE	DEFINITION
	I
I1	I COUNTER 1 BIT
ICLK	I COUNTER CLOCK
IDTRG	IDENTIFY TRIGGER
IGTE	I COUNTER CLOCK GATE
IGTE	INTERVAL GATE
IMAX	INTERVAL IS A MAXIMUM
IMIN	INTERVAL GREATER THAN MINIMUM
INTG	INTERROGATE GATE
INTM	INTERROGATE MODE
	L
LAGC	LOCALIZER AGC
LAZV	LEFT AZIMUTH VIDEO (FLY LEFT)
LNVD	LINEAR VIDEO
	M
MDMDT	MDM DATA TAP
MSG	MESSAGE
MSGIN	MESSAGE INPUT
MULTI	MULTI BEAM
	N
ΩMHZ	Ω MEGA HERTZ CLOCK
ΩMS	CLOCK WITH Ω MILLISECOND PERIOD
ΩUS	CLOCK WITH Ω MICROSECOND PERIOD
	P
PDEVA	PERCENTAGE DEVIATION AVAILABLE
PLUS GS	PLUS GLIDESLOPE OUTPUT
POS	REPOSITION ANSWER
PROG	SYSTEM PROCESSING
PROS	SYSTEM PROCESSING
PSD1	PRESET DATA COUNTER TO 1
PS/SB	POSITION OR SUBTRACT OPERATION
	Q
QLLV	QUANTIZED LOW LEVEL VIDEO
	R
RAZV	RIGHT AZIMUTH VIDEO (FLY RIGHT)
RECY	RECYCLE
RIB	READ I COUNTER INTO B REGISTER
RIL	READ I COUNTER INTO L REGISTER
RSAD	RESET ANGLE DATA
RSHO	RESET HOLD
RTRK	RESET TRACK MODE
	S
SCLK	SELECTED CLOCK
SIGN	SIGN OF THE INTERVAL
SITM	START INTERROGATE MODE
SIVD	STRETCHED IDENTIFIED VIDEO
SRCH	SEARCH MODE
SRLDT	SERIAL DATA
STEN	SPECIAL TEST EQUIPMENT ENABLE
STP1	STOP 1 COUNTER
STP1	STOP 1 COUNTER
STRC	START CONTROL COUNTER
SUB	SUBTRACT OPERATION
SUB-1	SUBTRACT-1 OPERATION
	T
T=0	T COUNTER EQUALS TO 0
T4	T COUNTER 4 BIT
T8	T COUNTER 8 BIT
T16	T COUNTER 16 BIT
TCLK	T COUNTER CLOCK
TG	TRACK GATE
TLG	TRACK LEVEL GATE
TRK	TRACK MODE
TV	TRACKED VIDEO
TVAL	TRACK GATE VALIDATED
	V
VID	DECODED VIDEO
VLBM	VALID BEAM
VLDBM	VALID BEAM
	W
WRDSC	WORD DISCREET

SERIAL DATA FORMAT

TEST STATUS BITS (ALL)
0 = NOT IN TEST
1 = PERFORMING SELF TEST
VALIDITY BITS (ALL)
0 = VALID DATA
1 = NON VALID DATA

AZIMUTH ANGLE WORD

WORD SYNC | SIGN | 16° | 8° | 4° | 2° | 1° | 0.5° | 0.25° | 0.125° | 0.0625° | 0.03125° | 0.01562° | TEST STATUS | VALIDITY | PARITY

1 2 3 4 5 6 7 8 9 10 11 12 13 14 15 16 17 18 19 20

SIGN BIT
0 = PLUS OR FLY LEFT (RIGHT OF CENTERLINE)
1 = MINUS OR FLY RIGHT (LEFT OF CENTERLINE)

ELEVATION ANGLE WORD

WORD SYNC | SIGN | 16° | 8° | 4° | 2° | 1° | 0.5° | 0.25° | 0.125° | 0.0625° | 0.03125° | 0.01562° | TEST STATUS | VALIDITY | PARITY

1 2 3 4 5 6 7 8 9 10 11 12 13 14 15 16 17 18 19 20

SIGN BIT FOR ELEVATION AND RANGE WORDS
0 = NORMAL DATA
1 = AGC FAILURE DURING SELF-TEST, OR MIXER CRYSTAL CURRENT FAILURE

RANGE WORD

WORD SYNC | SIGN | 16 NM | 8 NM | 4 NM | 2 NM | 1 NM | 0.5 NM | 0.25 NM | 0.125 NM | 0.0625 NM | 0.03125 NM | 0.01562 NM | TEST STATUS | VALIDITY | PARITY

1 2 3 4 5 6 7 8 9 10 11 12 13 14 15 16 17 18 19 20

3. FLAG (INVALID) CONDITIONS
AZ/EL: NO DATA FOR 380 MS; OR 2 AZ OR 2 EL WITHIN 64 MS; OR < 8 OR ≥ 128 CONSECUTIVE PULSE PAIRS
DISTANCE: NO DATA FOR 200 MS; OR < 8 REPLIES TO 16 INTERROGATIONS

UNFLAG (VALIDITY) REQUIREMENTS
8 CONSECUTIVE VALID BEAMS
1 VALID REPLY

SIGNATURE	DATE
DSGN J.D. HOLMES	6/6/79
DR	
ENGR J.M. WEBB	8/17/90
ENGR	7/9/90
APP	9/10/90
	7/10/90
DMM PLAN D. K. Kimbrell	9-11-90

NATIONAL AERONAUTICS AND SPACE ADMINISTRATION
LYNDON B. JOHNSON SPACE CENTER HOUSTON, TEXAS

MICROWAVE SCANNING BEAM LANDING SYSTEM

SPACE SHUTTLE | ALL | DWG NO 9.4

LTR E | PCN | 126.5 X 34 | PAGE | SHEET 1 OF 1

4 MLS

BASIC REV E

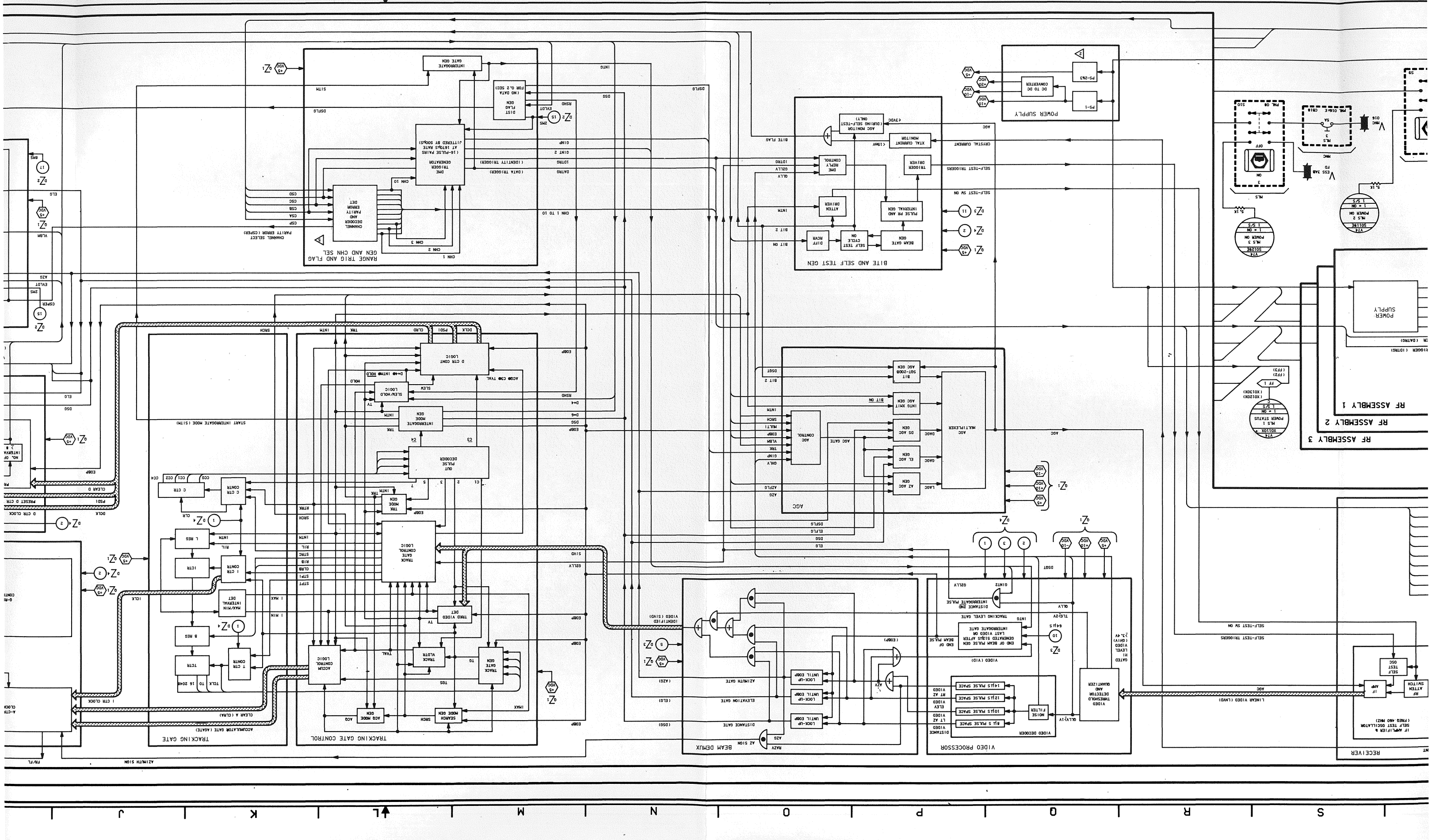
RANGE TRIG AND FLAG GEN AND CHN SEL
INTERROGATE GATE GEN
DIST FLAG GEN (NO DATA FOR 0, 2 SEC)
CHANNEL DECODER AND PARITY ERROR DET
DME TRIGGER GENERATOR (16-PULSE PAIRS AT 1676/S RATE JITTERED BY 500/S)
CHN 1 TO 10
CHN 1
CHN 2
CHN 3
CHN 10
PARITY ERROR (CSPER)
CHANNEL SELECT
BITE AND SELF TEST GEN
BEAM GATE GEN
PULSE PR AND INTERVAL GEN
SELF TEST CYCLE ON
DIFF REVR
DME TRIGGER ENABLE CONTROL
ATTACK DRIVER
TRIGGER DRIVER
XTAL CURRENT MONITOR
ADC MONITOR (DURING SELF-TEST ONLY)
POWER SUPPLY
DC TO DC CONVERTER
PS-1
PS-2&3
RF ASSEMBLY 1
RF ASSEMBLY 2
RF ASSEMBLY 3
RECEIVER
IF AMPLIFIER & SELF TEST OSCILLATOR (FIXED 460 MHZ)
IF ATTEN SWITCH
SELF TEST OSC
LINEAR VIDEO (LNVD)
ADC
SELF-TEST TRIGGERS
SELF-TEST SW ON
VIDEO PROCESSOR
VIDEO DECODER
NOISE FILTER
VIDEO THRESHOLD DETECTOR AND QUANTIZER
DISTANCE VIDEO
ELEV VIDEO
AZ VIDEO
BEAM DEMUX
AZIMUTH GATE
ELEVATION GATE
DISTANCE GATE
AGC
AGC CONTROL
AGC GATE
MULTIPLEXER
AZ AGC GEN
EL AGC GEN
DS AGC GEN
INTG XMIT AGC GEN
BIT AGC GEN
SDT-2008 BIT
TRACKING GATE CONTROL
TRACK GATE GEN
TRACK VLDTR
TRKD VIDEO DET
TRACK GATE CONTROL LOGIC
ACCUM CONTROL LOGIC
SEARCH MODE GEN
ACQ MODE GEN
TRK MODE GEN
SLEW/HOLD LOGIC
D CTR CONT LOGIC
OUT PULSE DECODER
INTERROGATE MODE GEN
C CTR COUNTR
L REG
I CTR COUNTR
MAX/MIN INTERVAL DET
B REG
T CTR COUNTR
TCTR
ACCUMULATOR GATE (AGATE)
CLEAR A (CLRA)
TRACKING GATE
START INTERROGATE MODE (SITM)
AZIMUTH SIGN
I CTR CLOCK
D CTR CLOCK
PRESET D CTR
CLEAR D
NO. OF INTERRA 2 B
ACCUM CLOCK
A-CTR CLOCK
Q-REG CONTR
RF/FL
S
R
Q
P
O
N
M
L
K
J

DATE: 08/22/90 | NAME: JEW | VERSION: INRG 12

W V U T S R Q P O N

8 7 6 5 4 3 2 1

GROUND STATION RADIATION

PARAMETER	TIME ALLOCATION	COVERAGE AZIMUTH	COVERAGE ELEVATION
DISTANCE	40.000 MS	±15 DEG	0 TO 23 DEG
GUARD	14.875 MS	---	---
AZIMUTH	44.290 MS	±15 DEG	0 TO 23 DEG
GUARD	14.875 MS	---	---
ELEVATION	85.960 MS	±20 DEG	0 TO 30 DEG

200.000 MS/DATA CYCLE

TIME ALLOCATION

DISTANCE	G	AZIMUTH	G	ELEVATION

200 MS

DISTANCE SOLICIT SIGNAL (14 PULSE PAIRS/SCAN)

AZIMUTH SIGNAL

ELEVATION SIGNAL

DISTANCE INTERROGATE SIGNAL (16 PULSE PAIRS/SCAN)

DISTANCE REPLY SIGNAL

RECEIVER

RUNWAY	CHANNEL
KSC15	8
KSC 33	6
EDW 17	6
EDW 22	8
NOR 17	8
VAFB 12	TBD
VAFB 30	TBD
DAKAR 1	8

CH NO.	R'CD SIGNAL FREQ-GHZ
1	15.412
2	15.436
3	15.484
4	15.508
5	15.532
6	15.568
7	15.592
8	15.616
9	15.664
10	15.688

MIXER

CRYSTAL CURRENT

IF AMPLIFIER & SELF TEST OSCILLATOR (FREQ 460 MHZ)

RF ATTEN SWITCH

IF AMP

SELF TEST OSC

ISOLATOR

RF FILTER

LIMITER

LOCAL OSCILLATOR

CHAN 1	14.952 GHZ
CHAN 2	14.976 GHZ
CHAN 3	15.024 GHZ
CHAN 4	15.048 GHZ
CHAN 5	15.072 GHZ
CHAN 6	15.108 GHZ
CHAN 7	15.132 GHZ
CHAN 8	15.156 GHZ
CHAN 9	15.204 GHZ
CHAN 10	15.228 GHZ

LINEAR VIDEO (LNVD)

AGC

SELF-TEST TRIGGERS

SELF-TEST SV ON

VIDEO PROCESSOR

VIDEO THRESHOLD DETECTOR AND QUANTIZER

VIDEO DECODER

NOISE FILTER

8 µS PULSE SPACE

10 µS PULSE SPACE

12 µS PULSE SPACE

14 µS PULSE SPACE

DISTANCE VIDEO

LT AZ VIDEO

ELEV VIDEO

RT AZ VIDEO

GATED HI LEVEL VIDEO (GHLV) ≥3.4V

VIDEO (VID)

END OF BEAM PULSE GEN GENERATED 51 µS AFTER LAST VIDEO OR INTERROGATE GATE

END OF BEAM PULSE

TRACKING LEVEL GATE

DISTANCE 2ND INTERROGATE PULSE

BEAM DEMUX

AZ SIGN

DISTANCE GATE

ELEVATION GATE

AZIMUTH GATE

LOCK-UP UNTIL EOBP

IDENTIFIED VIDEO (SIVD)

AGC

AZ AGC GEN

EL AGC GEN

DS AGC GEN

INTG XMIT AGC GEN

BIT 5QT-20DB AGC GEN

AGC MULTIPLEXER

AGC CONTROL

AGC GATE

BIT ON

BIT 2

DSQT

ELG

DSG

ELFLG

DSFLG

AZG

AZFLG

GHLV

GINP

TRK

VLBM

EOBP

MULTI

SRCH

INTM

MLS

CHANNEL

CSA

CSB

CSC

CSD

CSP

PNL 08

S11

RF ASSEMBLY 3

RF ASSEMBLY 2

RF ASSEMBLY 1

MODULATOR

CHANNEL NO.	PULSE PAIR Δ T (DATA TRIG-ID TRIG)
1	11 µS
2	13 µS
3	15 µS
4	17 µS
5	19 µS
6	21 µS
7	23 µS
8	25 µS
9	27 µS
10	29 µS

IDENTITY TRIGGER (IDTRG)

DATA TRIGGER (DATRG)

+280 VDC

+15 VDC

+7 VDC

+5 VDC

-8 VDC

POWER SUPPLY

MAGNETRON

(15.460 GHZ) (0.3 µS PULSE) (2.0 KW PEAK)

ANT	Z_O	X_O
2	367.20	261.55
3	368.52	261.36
1	369.26	261.27

MSBLS ANTENNAS (KU-BAND)

ORBITER UPPER FUSELAGE

V74 X0110X MLS 1 POWER STATUS 1 = ON 1 S/S

(X0120X) (X0130X)

FF 1

(FF2) (FF3)

V74 S0109E MLS 1 POWER ON 1 = ON 1 S/S

V74 S0119E MLS 2 POWER ON 1 = ON 1 S/S

V74 S0129E MLS 3 POWER ON 1 = ON 1 S/S

5.1K

$V_{ESS\ 1BC\ FD}$ $V_{MNA\ 014}$ MNA PNL 014E CB25

$V_{ESS\ 2CA\ FD}$ $V_{MNB\ 015}$ MNB PNL 015E CB24

$V_{ESS\ 3AB\ FD}$ $V_{MNC\ 016}$ MNC PNL 016E CB18

PNL 08 S8 PNL 08 S9 PNL 08 S10

POWER SUPPLY

PS-1

PS-2&3

DC TO DC CONVERTER

BITE AND SELF TEST GEN

BEAM GATE GEN

SELF TEST CYCLE ON

DIFF RCVR

PULSE PR AND INTERVAL GEN

ATTEN DRIVER

TRIGGER DRIVER

DME REPLY CONTROL

XTAL CURRENT MONITOR

<15mV

AGC MONITOR (DURING SELF-TEST ONLY)

<3VDC

BIT ON

BIT 2

INTM

QLLV

G2LLV

IDTRG

BITE FLAG

DSFLG

BASIC REV E

DATE: 09/23/87	NAME: JB	VERSION: BPT, 3
DATE: 11/02/87	NAME: VCO	VERSION: INK, 2
DATE: 08/22/90	NAME: SEW	VERSION: INK, 3

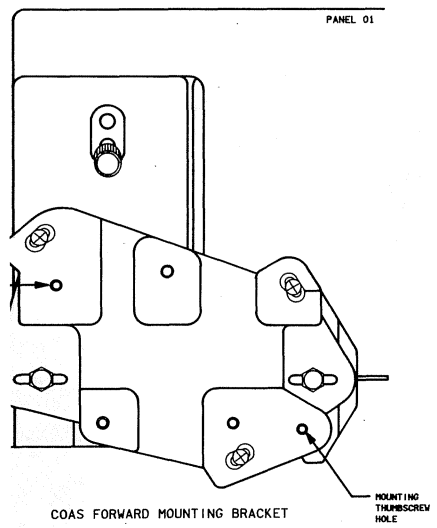

COAS FORWARD MOUNTING BRACKET

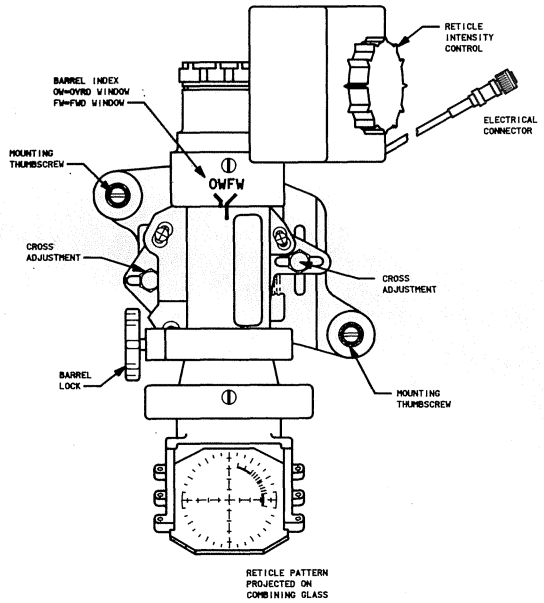

COAS (OPERATIONAL VIEW)

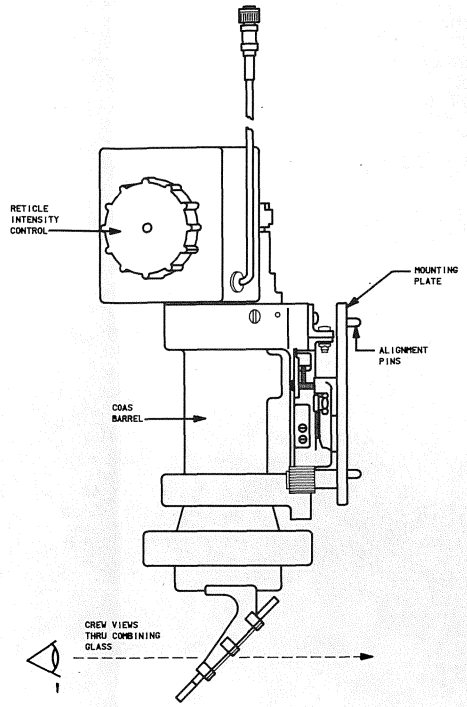

COAS (SIDE VIEW)

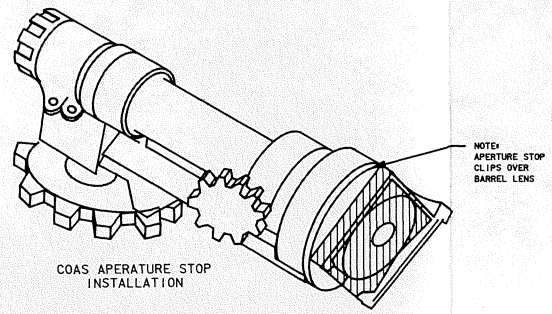

COAS APERATURE STOP INSTALLATION

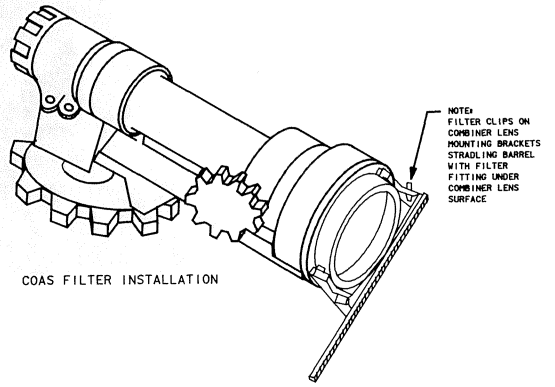

COAS FILTER INSTALLATION

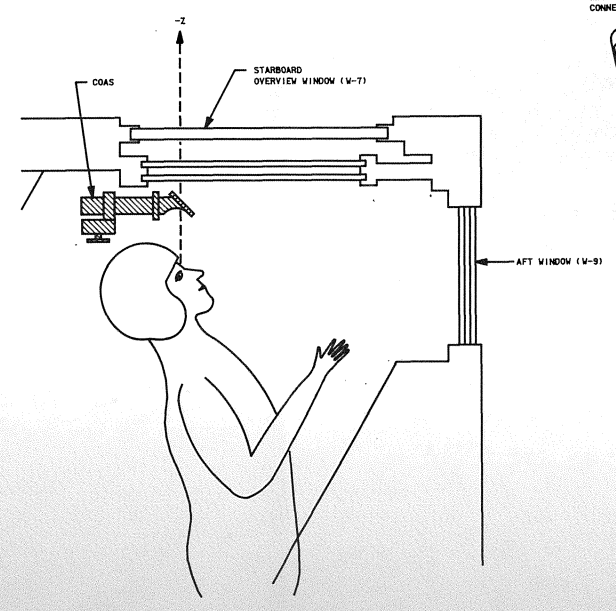

AFT STATION (-Z AXIS)

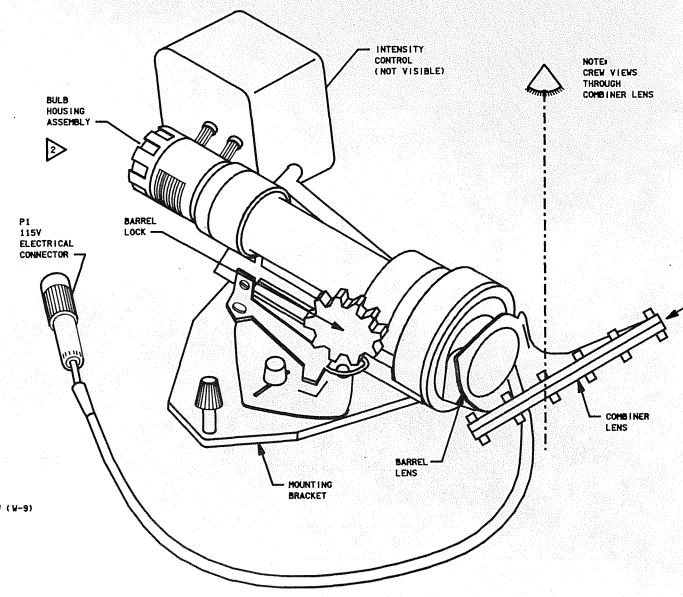

CREWMAN OPTICAL ALIGNMENT SIGHT

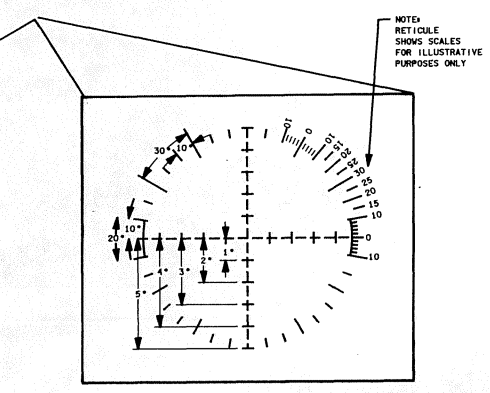

RETICAL PATTERN

COAS CONFIGURATION AND OPERATION

2 CONTINGENCY PROCEDURE
- CAN REMOVE LIGHT BULB AND SHINE A FLASHLIGHT THROUGH THE BARRELL TO ILLUMINATE RETICLE
- RETICLE BRIGHTNESS CAN BE CONTROLLED BY VARYING THE ANGLE OF THE FLASHLIGHT

NOTES: 1 AUTOMATIC RESET ON AMBIENT TEMPERATURE
- COAS MOUNTS IN DOCKING WINDOW (-Z AXIS) OR FORWARD WINDOW (+X AXIS) AND CAN BE STOWED DURING MANEUVERS
- COAS RETAINS CALIBRATION WITH REMOUNTING IN SAME WINDOW
- 2 SPARE BULBS ARE SUPPLIED IN CARRYING CASE

5 COAS

SIGNATURE	DATE	NATIONAL AERONAUTICS AND SPACE ADMINISTRATION LYNDON B. JOHNSON SPACE CENTER HOUSTON, TEXAS
DSGN LMB	5/29/79	
DR		COAS
ENGR M.T. SEVERANCE	8/17/90	
ENGR [signature]	7-5-90	
APP [signature]	9/10/90	
APP [signature]	9/10/90	SPACE SHUTTLE ALL — DWG NO 9.5
OMB/PLAN S.K. Kimbrell	9-11-90	
LTR E — PCN		93.5 X 34 — PAGE — SHEET 1 OF 1

BASIC REV E

BASIC REV E

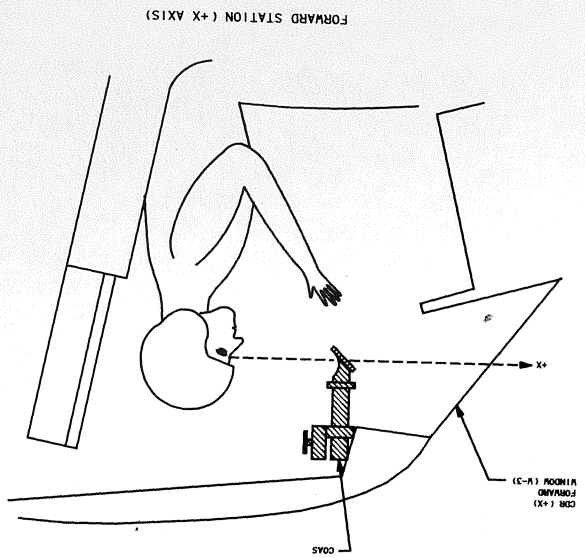

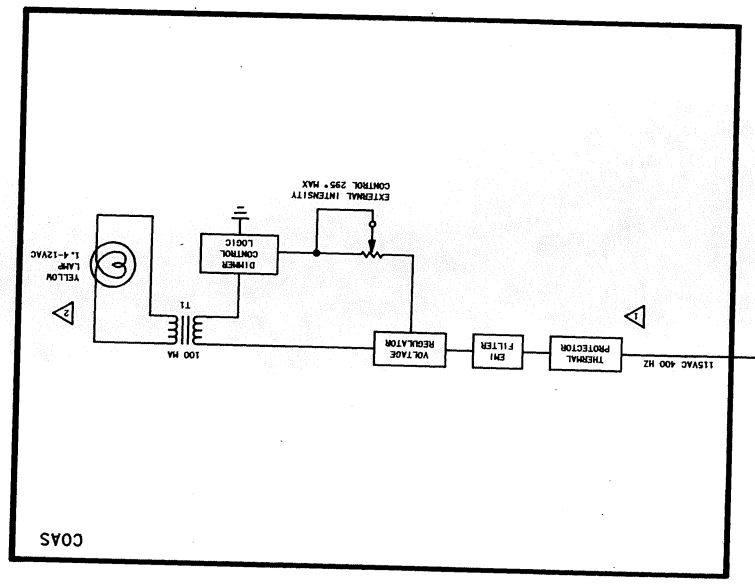

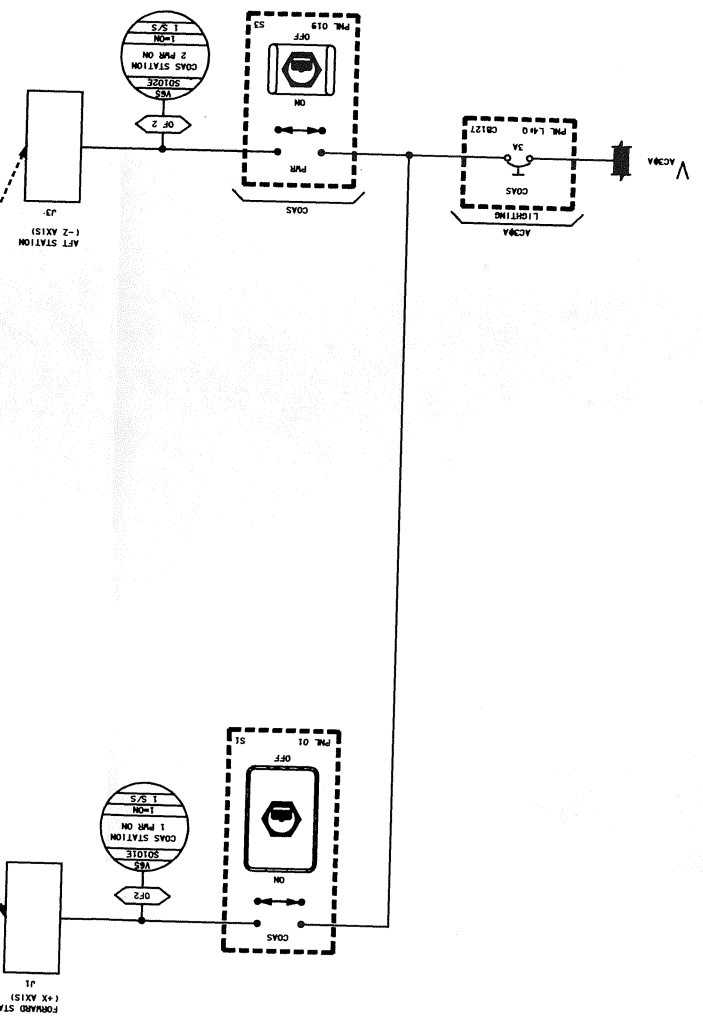

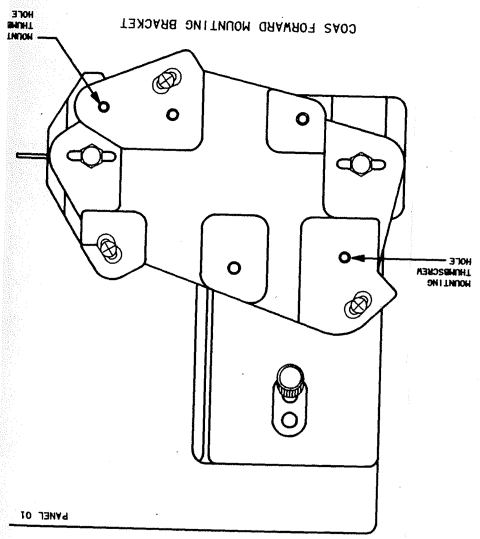

DATE 08/22/90	MAKER SEW	VERSION# INC.3

DATE:	NAME:	VERSION:
DATE: 08/22/95	NAME: MDU	VERSION: BPT: 8
DATE: 01/10/96	NAME: LAM	VERSION: INK: 5
DATE: 03/22/96	NAME: VSH	VERSION: INK: 6

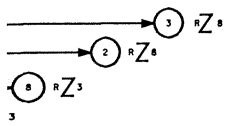

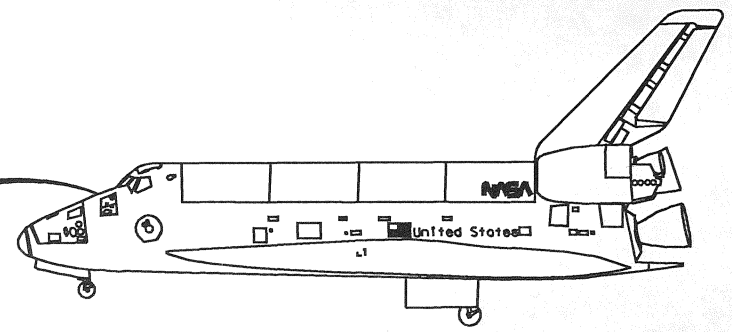

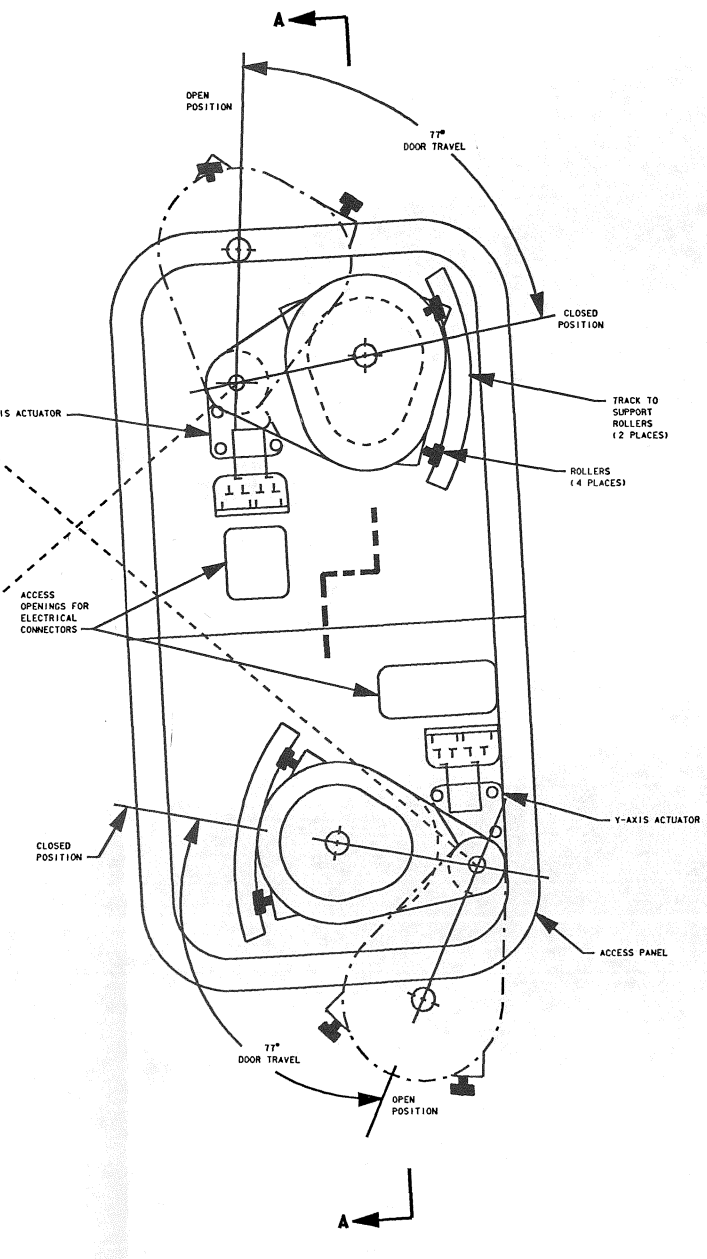

VIEW LOOKING INBOARD

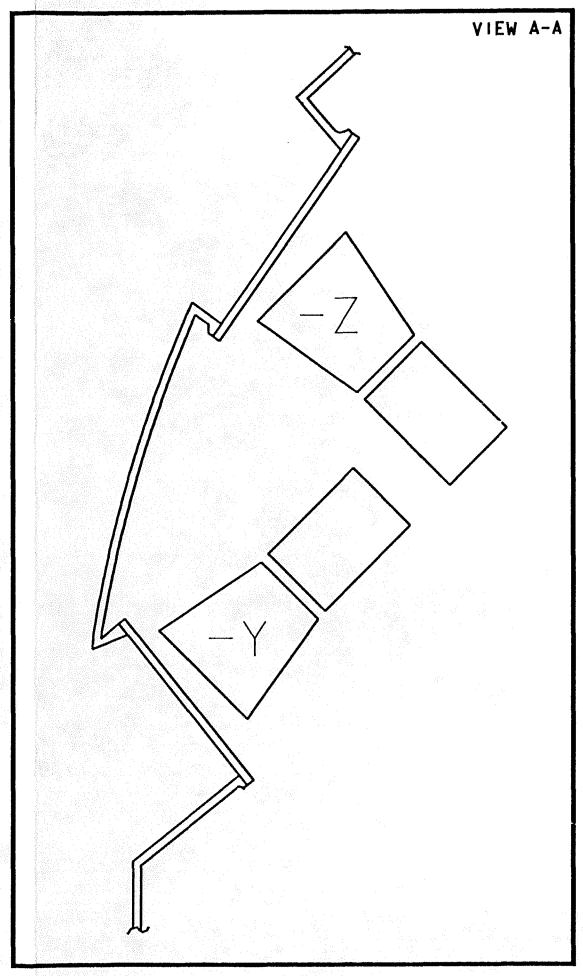

NOTES: 1. THREE POLES OF EACH HYBRID RELAY ARE SHOWN ON THIS DRAWING AND ARE USED FOR MOTOR ROTATION CONTROL. EACH RELAY CONTAINS A FOURTH POLE USED FOR OPERATIONAL STATUS WHICH IS SHOWN ON DRAWING 2.4-1

6 STAR 1

SIGNATURE	DATE	NATIONAL AERONAUTICS AND SPACE ADMINISTRATION LYNDON B. JOHNSON SPACE CENTER HOUSTON, TEXAS	
DSGN V. DOGGETT	1/10/79		
DR V. DOGGETT	1/10/79		
ENGR E. TRLICA		STAR TRACKER	
ENGR	9/5/96		
APP	9/25/96		
APP	9/26/96	SPACE SHUTTLE	DWG NO 9.6
CADS	7-5-96	ALL	
LTR E	PCN 6	104.5 X 34	PAGE SHEET 1 OF 3

BASIC REV E-6

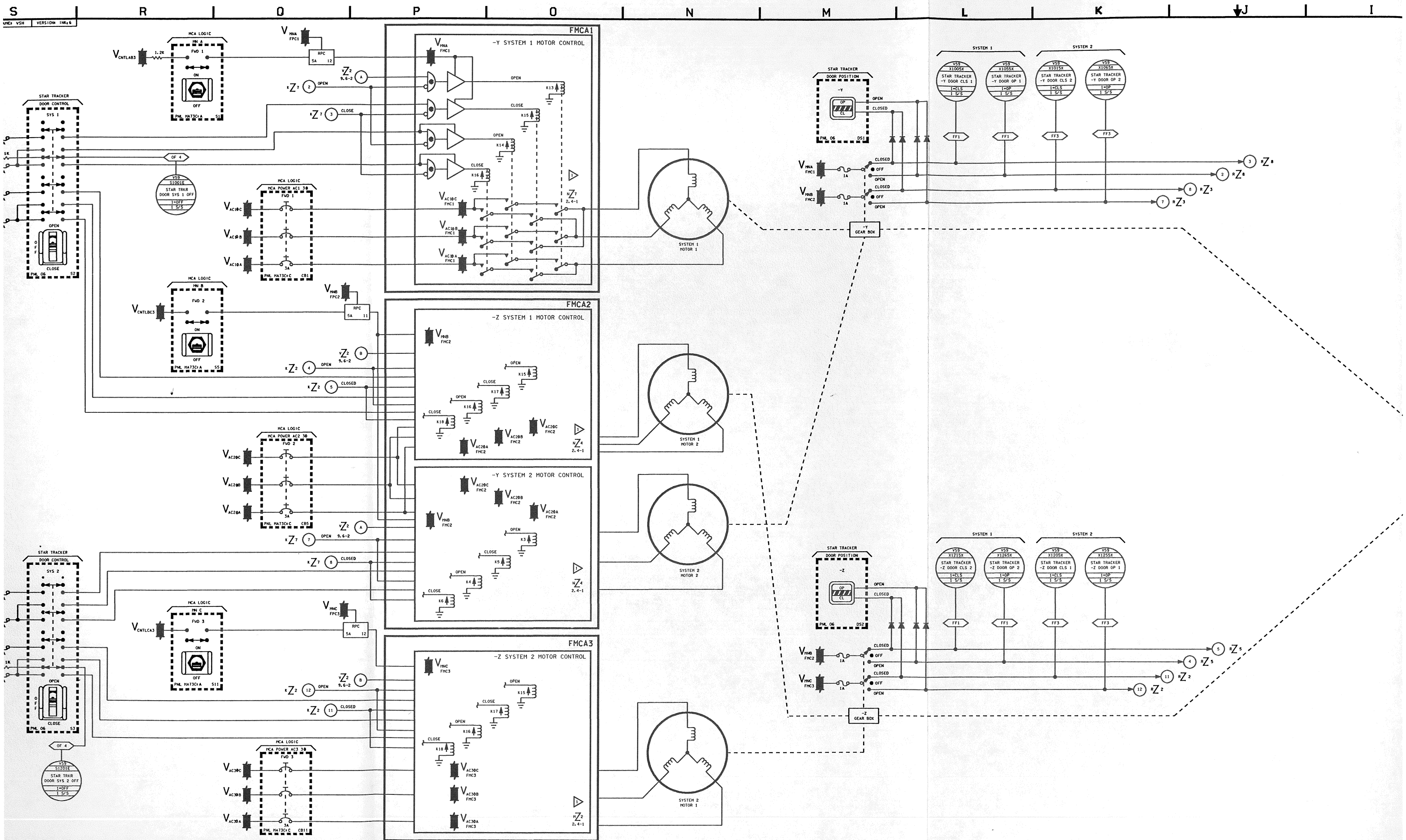

S R Q P O N M L K J I
FMCA1
-Y SYSTEM 1 MOTOR CONTROL
FMCA2
-Z SYSTEM 1 MOTOR CONTROL
-Y SYSTEM 2 MOTOR CONTROL
FMCA3
-Z SYSTEM 2 MOTOR CONTROL
STAR TRACKER DOOR CONTROL
STAR TRACKER DOOR POSITION
SYSTEM 1
SYSTEM 2
SYSTEM 1 MOTOR 1
SYSTEM 1 MOTOR 2
SYSTEM 2 MOTOR 2
SYSTEM 2 MOTOR 1
-Y GEAR BOX
-Z GEAR BOX

DATE: 03/22/96 | NAME: VSH | VERSION: INK6

S R O P O N M L

FMCA1 -Y SYSTEM 1 MOTOR CONTROL

FMCA2 -Z SYSTEM 1 MOTOR CONTROL

-Y SYSTEM 2 MOTOR CONTROL

FMCA3 -Z SYSTEM 2 MOTOR CONTROL

MCA LOGIC MN A FWD 1

MCA LOGIC MN B FWD 2

MCA LOGIC MN C FWD 3

MCA POWER AC1 3Φ FWD 1

MCA POWER AC2 3Φ FWD 2

MCA POWER AC3 3Φ FWD 3

STAR TRACKER DOOR CONTROL SYS 1

STAR TRACKER DOOR CONTROL SYS 2

STAR TRKR DOOR SYS 1 OFF

STAR TRKR DOOR SYS 2 OFF

STAR TRACKER DOOR POSITION -Y

STAR TRACKER DOOR POSITION -Z

STAR TRACKER -Y DOOR CLS 1

STAR TRACKER -Y DOOR OP 1

STAR TRACKER -Z DOOR CLS 2

STAR TRACKER -Z DOOR OP 2

STAR TRACKER -Y DOOR CLS 2

STAR TRACKER -Z DOOR CLS 1

SYSTEM 1 MOTOR 1

SYSTEM 1 MOTOR 2

SYSTEM 2 MOTOR 2

SYSTEM 2 MOTOR 1

-Y GEAR BOX

-Z GEAR BOX

BASIC REV E-6

DATE= 09/28/93	NAME= VSH	VERSION= INK= 10
DATE= 09/29/93	NAME= VSH	VERSION= INK= 11
DATE= 10/04/93	NAME= JDF	VERSION= INK= 12

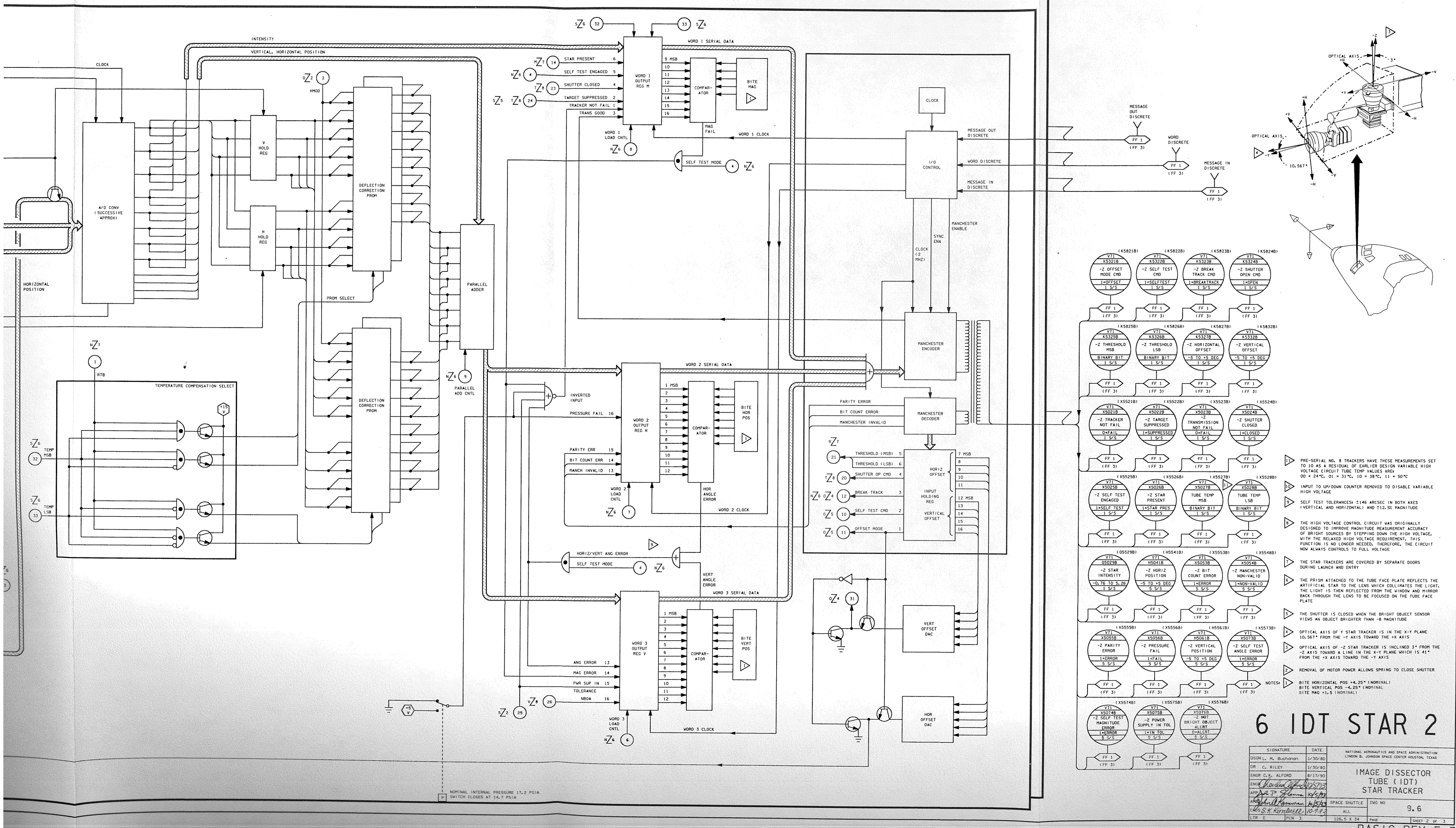

NOTES:

11. PRE-SERIAL NO. 8 TRACKERS HAVE THESE MEASUREMENTS SET TO 10 AS A RESIDUAL OF EARLIER DESIGN VARIABLE HIGH VOLTAGE CIRCUIT TUBE TEMP VALUES ARE: 00 = 24°C, 01 = 31°C, 10 = 38°C, 11 = 50°C
10. INPUT TO UP/DOWN COUNTER REMOVED TO DISABLE VARIABLE HIGH VOLTAGE
9. SELF TEST TOLERANCES: ±146 ARCSEC IN BOTH AXES (VERTICAL AND HORIZONTAL) AND ±12.5% MAGNITUDE
8. THE HIGH VOLTAGE CONTROL CIRCUIT WAS ORIGINALLY DESIGNED TO IMPROVE MAGNITUDE MEASUREMENT ACCURACY OF BRIGHT SOURCES BY STEPPING DOWN THE HIGH VOLTAGE, WITH THE RELAXED HIGH VOLTAGE REQUIREMENT, THIS FUNCTION IS NO LONGER NEEDED. THEREFORE, THE CIRCUIT NOW ALWAYS CONTROLS TO FULL VOLTAGE
7. THE STAR TRACKERS ARE COVERED BY SEPARATE DOORS DURING LAUNCH AND ENTRY
6. THE PRISM ATTACHED TO THE TUBE FACE PLATE REFLECTS THE ARTIFICIAL STAR TO THE LENS WHICH COLLIMATES THE LIGHT. THE LIGHT IS THEN REFLECTED FROM THE WINDOW AND MIRROR BACK THROUGH THE LENS TO BE FOCUSED ON THE TUBE FACE PLATE
5. THE SHUTTER IS CLOSED WHEN THE BRIGHT OBJECT SENSOR VIEWS AN OBJECT BRIGHTER THAN -8 MAGNITUDE
4. OPTICAL AXIS OF Y STAR TRACKER IS IN THE X-Y PLANE 10.567° FROM THE -Y AXIS TOWARD THE +X AXIS
3. OPTICAL AXIS OF -Z STAR TRACKER IS INCLINED 3° FROM THE -Z AXIS TOWARD A LINE IN THE X-Y PLANE WHICH IS 41° FROM THE +X AXIS TOWARD THE -Y AXIS
2. REMOVAL OF MOTOR POWER ALLOWS SPRING TO CLOSE SHUTTER
1. BITE HORIZONTAL POS +4.25° (NOMINAL)
   BITE VERTICAL POS -4.25° (NOMINAL
   BITE MAG +1.5 (NOMINAL)

6 IDT STAR 2

SIGNATURE		DATE	NATIONAL AERONAUTICS AND SPACE ADMINISTRATION LYNDON B. JOHNSON SPACE CENTER HOUSTON, TEXAS
DSGN	L. H. Buchanan	1/30/80	
DR	C. RILEY	1/30/80	IMAGE DISSECTOR TUBE (IDT) STAR TRACKER
ENGR	C.K. ALFORD	8/17/90	
ENGR			
APP			
APP			SPACE SHUTTLE
CHK			ALL
LTR	E	PCN 3	126.5 X 34

DWG NO 9.6

PAGE SHEET 2 OF 3

BASIC REV E-3

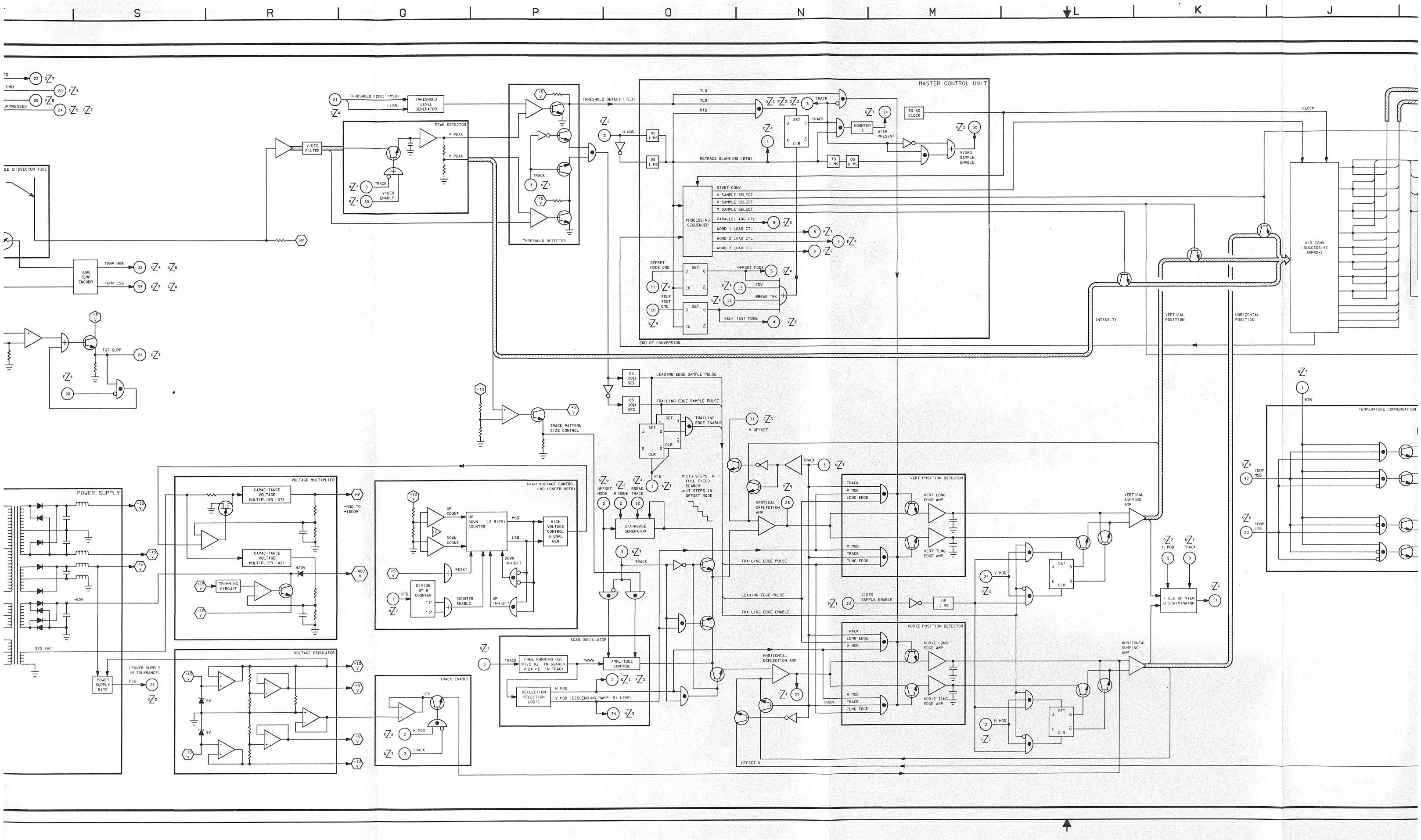

S
R
Q
P
O
N
M
L
K
J
MASTER CONTROL UNIT
THRESHOLD (CMD) (MSB)
(LSB)
THRESHOLD LEVEL GENERATOR
PEAK DETECTOR
V PEAK
VIDEO FILTER
VIDEO ENABLE
TRACK
THRESHOLD DETECTOR
THRESHOLD DETECT (TLD)
H MOD
TLD
RTB
RETRACE BLANKING (RTB)
COUNTER 3
STAR PRESENT
50 KC CLOCK
VIDEO SAMPLE ENABLE
CLOCK
PROCESSING SEQUENCER
START CONV
V SAMPLE SELECT
H SAMPLE SELECT
M SAMPLE SELECT
PARALLEL ADD CTL
WORD 1 LOAD CTL
WORD 2 LOAD CTL
WORD 3 LOAD CTL
OFFSET MODE CMD
SELF TEST CMD
OFFSET MODE
FOV
BREAK TRK
SELF TEST MODE
END OF CONVERSION
A/D CONV (SUCCESSIVE APPROX)
INTENSITY
VERTICAL POSITION
HORIZONTAL POSITION
TEMPERATURE COMPENSATION
TEMP MSB
TEMP LSB
TUBE TEMP ENCODR
TEMP MSB
TEMP LSB
TGT SUPP
LEADING EDGE SAMPLE PULSE
TRAILING EDGE SAMPLE PULSE
TRAILING EDGE ENABLE
TRACK PATTERN SIZE CONTROL
V OFFSET
≈175 STEPS IN FULL FIELD SEARCH
≈17 STEPS IN OFFSET MODE
OFFSET MODE
H MODE
BREAK TRACK
STAIRCASE GENERATOR
VERTICAL DEFLECTION AMP
VERT POSITION DETECTOR
VERT LONG EDGE AMP
VERT TLNG EDGE AMP
VERTICAL SUMMING AMP
TRAILING EDGE PULSE
LEADING EDGE PULSE
TRAILING EDGE ENABLE
VIDEO SAMPLE ENABLE
HORIZ POSITION DETECTOR
HORIZ LONG EDGE AMP
HORIZ TLNG EDGE AMP
HORIZONTAL DEFLECTION AMP
HORIZONTAL SUMMING AMP
FIELD OF VIEW DISCRIMINATOR
OFFSET H
POWER SUPPLY
220 VAC
POWER SUPPLY BITE
(POWER SUPPLY IN TOLERANCE)
VOLTAGE MULTIPLIER
CAPACITANCE VOLTAGE MULTIPLIER (X7)
CAPACITANCE VOLTAGE MULTIPLIER (X2)
TRIMMING CIRCUIT
+900 TO +1800V
HIGH VOLTAGE CONTROL (NO LONGER USED)
UP COUNT
DOWN COUNT
UP DOWN COUNTER (2 BITS)
MSB
LSB
HIGH VOLTAGE CONTROL SIGNAL GEN
DOWN INHIBIT
UP INHIBIT
RESET
DIVIDE BY 8 COUNTER
COUNTER ENABLE
VOLTAGE REGULATOR
TRACK ENABLE
SCAN OSCILLATOR
FREE RUNNING OSC ≈7.5 HZ IN SEARCH ≈24 HZ IN TRACK
AMPLITUDE CONTROL
DEFLECTION SELECTION LOGIC
V MOD (DESCENDING RAMP) BI LEVEL

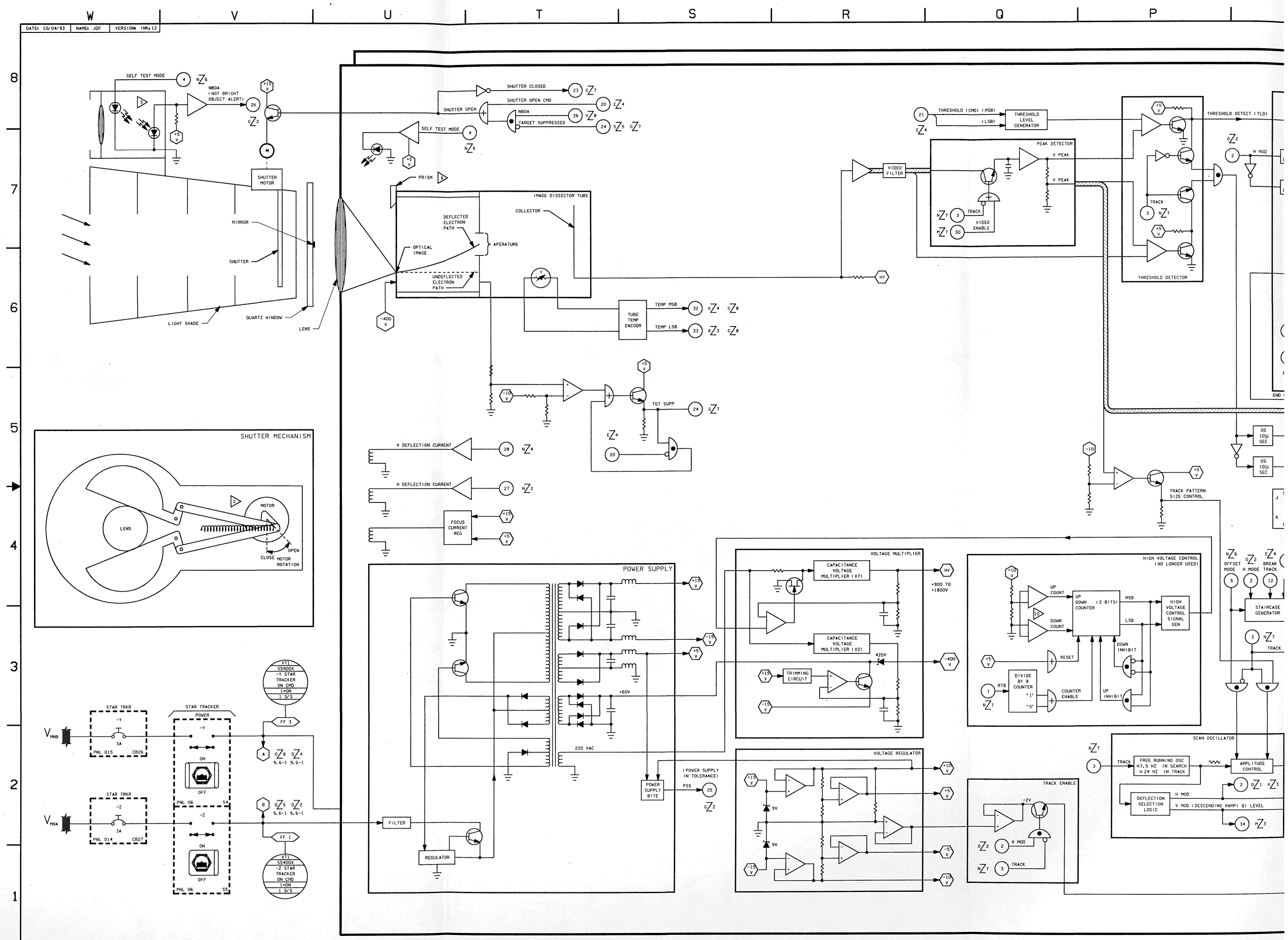

DATE: 10/04/93
NAME: JDF
VERSION: INK:12
SELF TEST MODE
NBOA (NOT BRIGHT OBJECT ALERT)
SHUTTER MOTOR
MIRROR
SHUTTER
LIGHT SHADE
QUARTZ WINDOW
LENS
SHUTTER CLOSED
SHUTTER OPEN CMD
SHUTTER OPEN
NBOA
TARGET SUPPRESSED
PRISM
IMAGE DISSECTOR TUBE
COLLECTOR
DEFLECTED ELECTRON PATH
APERATURE
OPTICAL IMAGE
UNDEFLECTED ELECTRON PATH
TUBE TEMP ENCODR
TEMP MSB
TEMP LSB
TGT SUPP
V DEFLECTION CURRENT
H DEFLECTION CURRENT
FOCUS CURRENT REG
THRESHOLD (CMD) (MSB)
(LSB)
THRESHOLD LEVEL GENERATOR
VIDEO FILTER
PEAK DETECTOR
V PEAK
TRACK
VIDEO ENABLE
THRESHOLD DETECT (TLD)
THRESHOLD DETECTOR
H MOD
TRACK PATTERN SIZE CONTROL
SHUTTER MECHANISM
MOTOR
CLOSE
OPEN
MOTOR ROTATION
POWER SUPPLY
220 VAC
+60V
FILTER
REGULATOR
POWER SUPPLY BITE
(POWER SUPPLY IN TOLERANCE)
PSS
VOLTAGE MULTIPLIER
CAPACITANCE VOLTAGE MULTIPLIER (X7)
CAPACITANCE VOLTAGE MULTIPLIER (X2)
TRIMMING CIRCUIT
+900 TO +1800V
VOLTAGE REGULATOR
HIGH VOLTAGE CONTROL (NO LONGER USED)
UP COUNT
DOWN COUNT
UP DOWN COUNTER (2 BITS)
MSB
LSB
HIGH VOLTAGE CONTROL SIGNAL GEN
DOWN INHIBIT
UP INHIBIT
RESET
DIVIDE BY 8 COUNTER
COUNTER ENABLE
RTB
STAIRCASE GENERATOR
OFFSET MODE
H MODE
BREAK TRACK
SCAN OSCILLATOR
FREE RUNNING OSC ≈7.5 HZ IN SEARCH ≈24 HZ IN TRACK
AMPLITUDE CONTROL
DEFLECTION SELECTION LOGIC
V MOD (DESCENDING RAMP) BI LEVEL
TRACK ENABLE
STAR TRKR
STAR TRACKER
POWER
ON
OFF
FF 3
FF 1

BASIC REV E-3

DATE: 09/07/93	NAME: VSH	VERSION INK: 1
DATE: 09/28/93	NAME: VSH	VERSION INK: 2

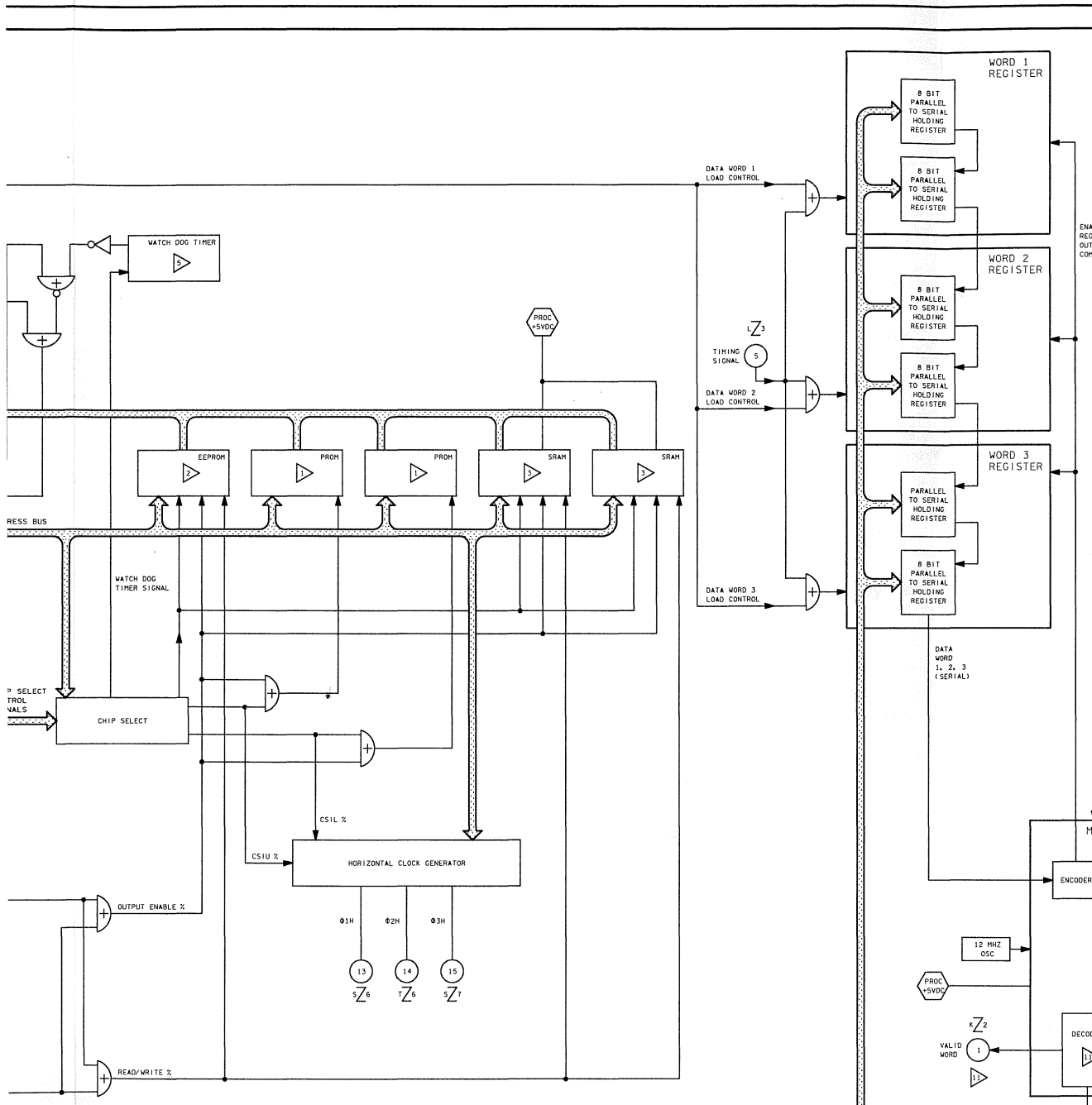

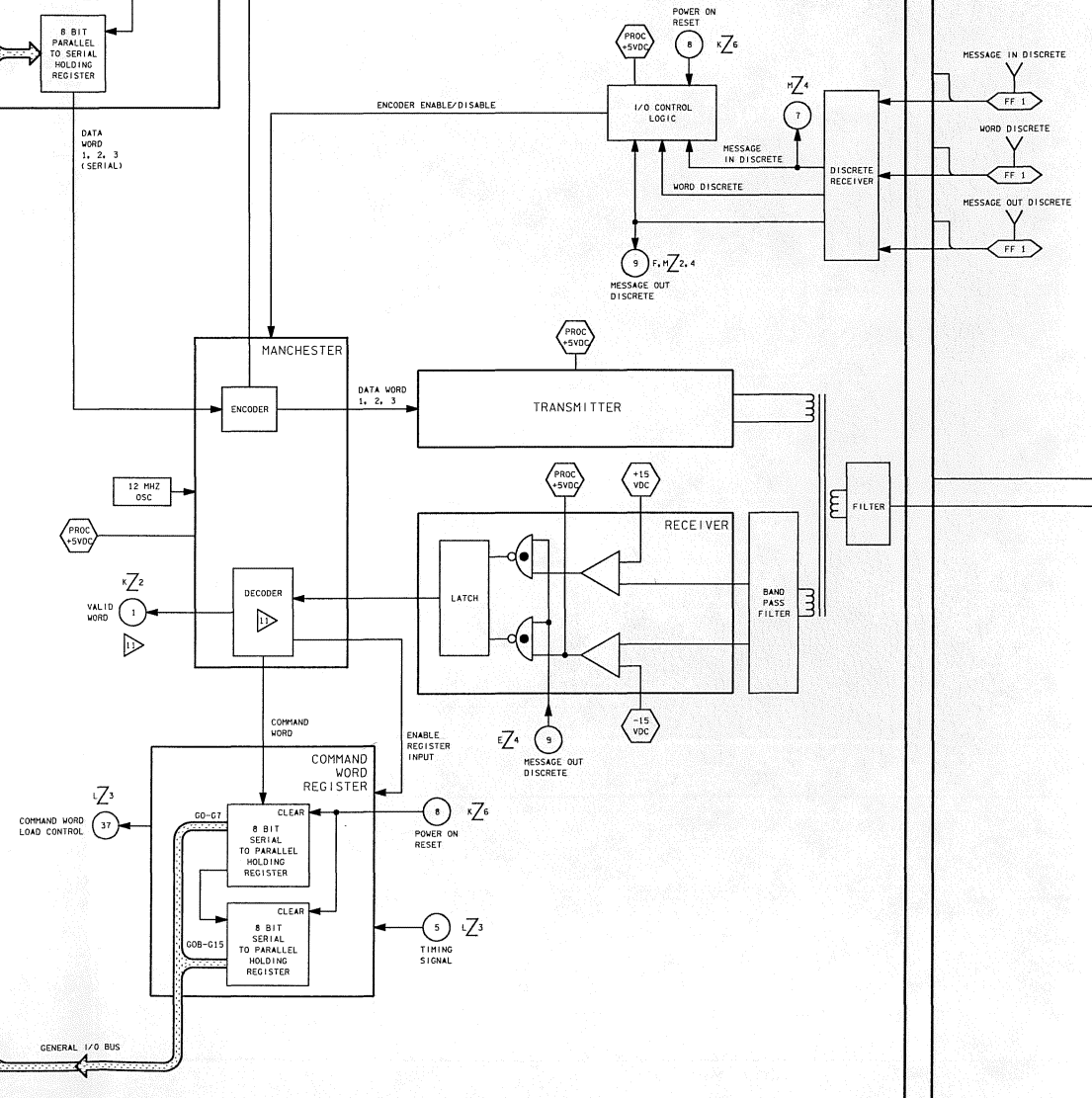

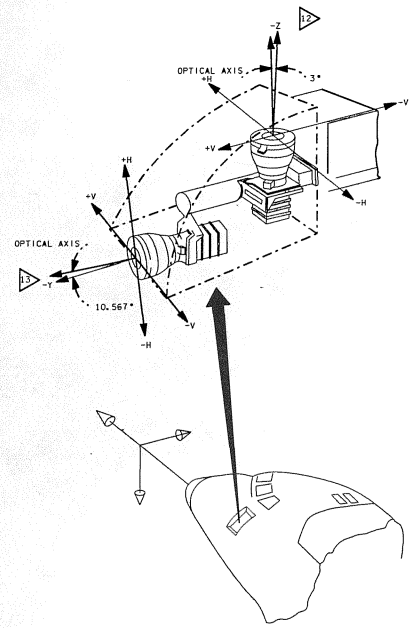

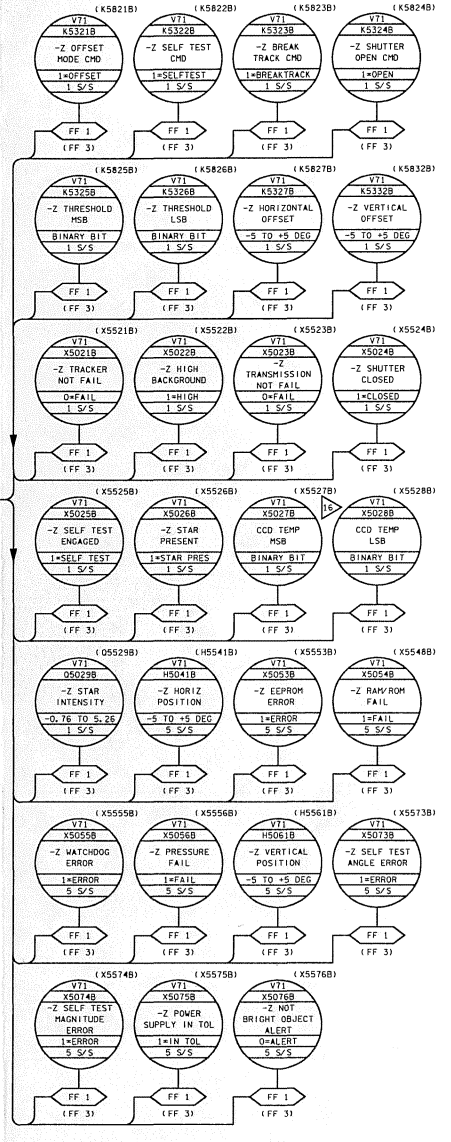

16. ANY FAILURE IN THE THERMOELECTRIC COOLER (TEC) WHICH DISRUPTS IT COOLING CAPABILITY, WOULD BE DETECTED BY THE CCD TEMPERATURE SENSORS WHICH WILL SET THE APPROPRIATE DATA BITS AS FOLLOWS:

ZONES	TEMP RANGE	MSB	LSB
0	<3° C	0	0
1	3 TO 11° C	0	1
2	11 TO 23° C	1	0
3	>23° C	1	1

15. REMOVAL OF MOTOR POWER ALLOWS SPRING TO CLOSE SHUTTER

14. THE PRISM ATTACHED TO THE TUBE FACE PLATE REFLECTS THE ARTIFICAL STAR TO THE LENS WHICH COLLIMATES THE LIGHT, THE LIGHT IS THEN REFLECTED FROM THE WINDOW AND MIRROR BACK THROUGH THE LENS

13. OPTICAL AXIS OF Y STAR TRACKER IS IN THE X-Y PLANE 10.567° FROM THE -Y AXIS TOWARD THE +X AXIS

12. OPTICAL AXIS OF -Z STAR TRACKER IS INCLINED 3° FROM THE -Z AXIS TOWARD A LINE IN THE X-Y PLANE WHICH IS 41° FROM THE +X AXIS TOWARD THE -Y AXIS

11. THE MANCHESTER DECODER CHECKS THE COMMAND WORD FOR A BIT COUNT ERROR, PARITY ERROR OR MANCHESTER ERROR. AN ERROR WILL BE ANNUNCIATED VIA THE "VALID WORD" BIT IF ONE OF THESE ERRORS IS DETECTED. WHICH ONE OF THE THREE ERRORS WAS FOUND CAN NOT BE DIFFERENTIATED

10. THE MICROPROCESSOR WILL ANNUNCIATE A STAR TRACKER FAIL BITE IF THE CCD TEMPERATURE EXCEEDS 23 DEGREES CELSIUS, THE TRACKER WILL CONTINUE TO OPERATE

9. THE THERMAL ELECTRONIC COOLER (TEC) MAINTAINS THE TEMPERATURE OF THE CCD AT 20 DEGREES CELSIUS

8. HIGH BACKGROUND PROTECTION PROVIDES TWO LEVELS OF PROTECTION

   LEVEL 1: SET WHEN MICROPROCESSOR RECOGNIZES A MEASURED MAGNITUDE BRIGHTER THAN 2.00 (20 COUNTS). THE MICROPROCESSOR SETS THE HORIZONTAL AND VERTICAL POSITION TO ZERO. THE STAR PRESENT DISCRETE IS INHIBITED. THE SHUTTER REMAINS OPEN. NOTE: THE SHUTTER CAN BE COMMANDED OPEN AND THE TRACKER WILL TRACK STARS BUT THE ACCURACY MAY BE OUTSIDE OF THE 60 ARC SEC SPECIFICATION

   LEVEL 2: WHEN MICROPROCESSOR RECOGNIZES A MAGNITUDE BRIGHTER THAN -0.765 (255 COUNTS), IT ISSUES A TARGET SUPPRESS (TS) SIGNAL WHICH CLOSES THE STAR TRACKER SHUTTER. NOTE: THE TS SIGNAL DOES NOT LATCH BUT THE SHUTTER WILL REMAIN CLOSED UNTIL A STAR IS EXPECTED IN THE FOV

7. THE CHARGED COUPLE DEVICE (CCD) CONTAINS THE 512 X 512 PIXEL SILICON CHIP (APPROXIMATELY 1 CM² H SIZE) USED TO SENSE STAR LIGHT

6. THE POWER ON RESET ENSURES THAT THE MICROPROCESSOR IS INITIALIZED IN THE PROPER STATE WHEN POWER IS APPLIED

5. THE WATCHDOG TIMER REBOOTS THE MICROPROCESSOR IF THE MICROPROCESSOR FAILS TO CLEAR THE WATCHDOG TIMER COUNTER EVERY 210 MS. THE WATCHDOG TIMER'S FUNCTION IS TO RESET THE MICROPROCESSOR IN THE EVENT IT BECOMES STUCK IN AN INFINITE LOOP

4. EACH MUX CARD SWITCH POSITION IS MUTUALLY EXCLUSIVE AND IS UNDER THE CONTROL OF THE MICROPROCESSOR. THE POSITION OF THE MUX CARD SWITCH DETERMINES WHICH PARAMETER WILL BE SAMPLED BY THE MICROPROCESSOR

3. RANDOM ACCESS MEMORY (RAM) IS USED FOR TEMPORARY MEMORY STORAGE. THE CONTENTS OF RAM ARE LOST WHEN THE TRACKER LOSES POWER

2. ELECTRICALLY ERASABLE PROGRAMMABLE READ ONLY MEMORY (EEPROM) STORES TRACKER CALIBRATION COEFFICIENTS IN FOUR REDUNDANT LOCATIONS. MICROPROCESSOR USES CYCLIC REDUNDANCY TO VERIFY INTEGRITY OF MEMORY LOCATIONS

NOTES: 1. PROGRAMMABLE READ ONLY MEMORY (PROM) STORES THE MICROPROCESSOR OPERATING CODE

6 SSST 3

SIGNATURE	DATE	NATIONAL AERONAUTICS AND SPACE ADMINISTRATION LYNDON B. JOHNSON SPACE CENTER HOUSTON, TEXAS
DSGN S. DAWSON	8/23/93	
DR M. URDIALES	8/24/93	
ENGR L. STALLARD		SOLID STATE STAR TRACKER (SSST)
ENGR	9/21/93	
APPR	10/5/93	
APPR	10/7/93	SPACE SHUTTLE / DWG NO 9.6
CADR S.K. Kimbrell	10-8-93	ALL
LTR E PCN 3		126.5 X 34 / PAGE / SHEET 3 OF 3

BASIC REV E-3

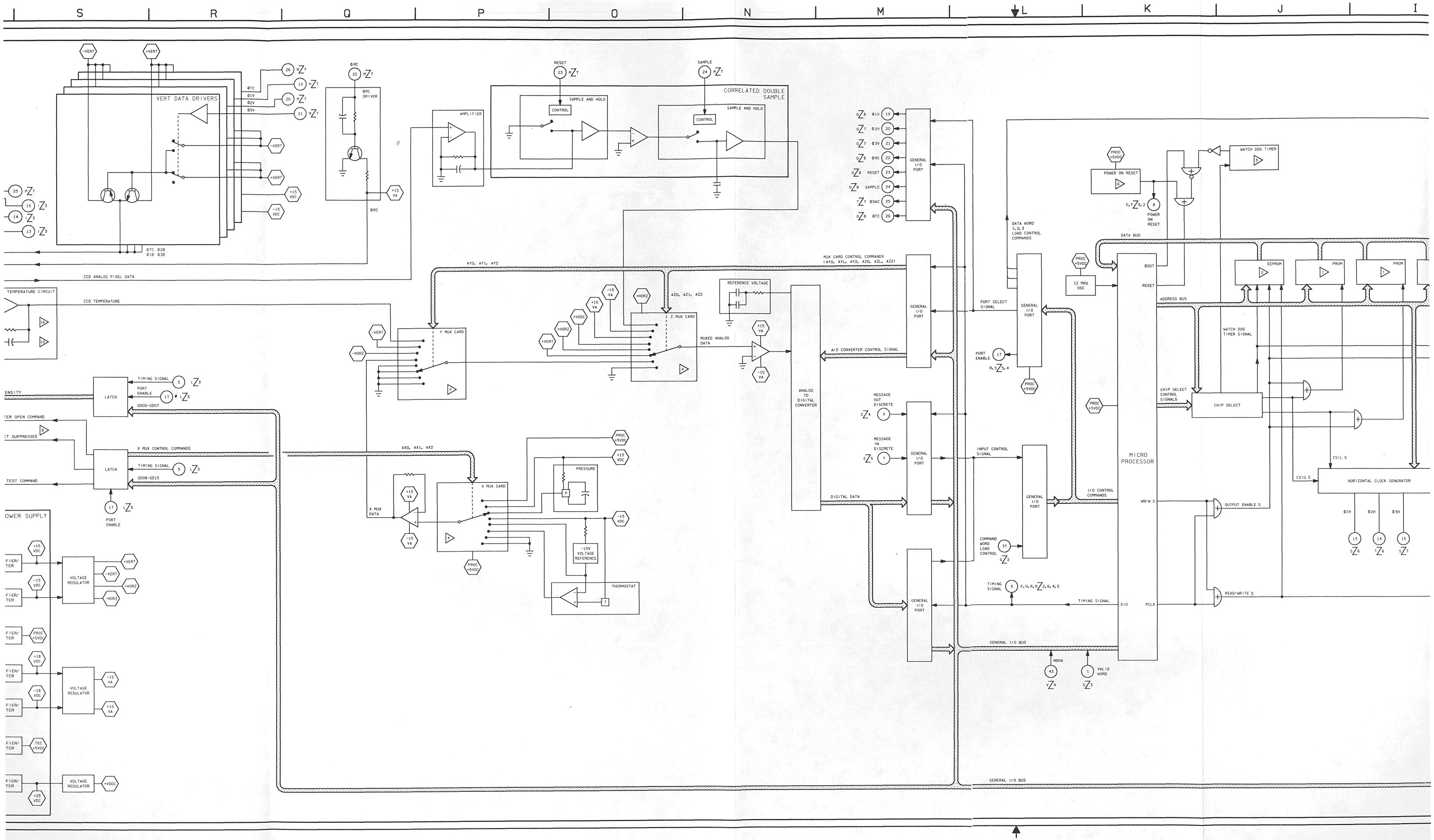

S
R
Q
P
O
N
M
L
K
J
I
VERT DATA DRIVERS
CORRELATED DOUBLE SAMPLE
SAMPLE AND HOLD
CONTROL
AMPLIFIER
RESET
SAMPLE
CCD ANALOG PIXEL DATA
CCD TEMPERATURE
TEMPERATURE CIRCUIT
Y MUX CARD
Z MUX CARD
REFERENCE VOLTAGE
MUXED ANALOG DATA
ANALOG TO DIGITAL CONVERTER
A/D CONVERTER CONTROL SIGNAL
MUX CARD CONTROL COMMANDS (AY0, AY1, AY2, AZ0, AZ1, AZ2)
GENERAL I/O PORT
DATA WORD 1,2,3 LOAD CONTROL COMMANDS
PORT SELECT SIGNAL
PORT ENABLE
MESSAGE OUT DISCRETE
MESSAGE IN DISCRETE
DIGITAL DATA
INPUT CONTROL SIGNAL
COMMAND WORD LOAD CONTROL
TIMING SIGNAL
GENERAL I/O BUS
NBOA
VALID WORD
MICRO PROCESSOR
I/O CONTROL COMMANDS
WR/W %
GIO
PCLK
POWER ON RESET
WATCH DOG TIMER
DATA BUS
12 MHz OSC
BOOT
RESET
ADDRESS BUS
EEPROM
PROM
WATCH DOG TIMER SIGNAL
CHIP SELECT CONTROL SIGNALS
CHIP SELECT
CSIL %
CSIU %
HORIZONTAL CLOCK GENERATOR
OUTPUT ENABLE %
READ/WRITE %
LATCH
TIMING SIGNAL
PORT ENABLE
GD00-GD07
X MUX CONTROL COMMANDS
GD08-GD15
TEST COMMAND
AX0, AX1, AX2
X MUX DATA
X MUX CARD
PRESSURE
-10V VOLTAGE REFERENCE
THERMOSTAT
VOLTAGE REGULATOR
POWER SUPPLY

DATE: 09/28/93 | NAME: VSH | VERSION: INK 2

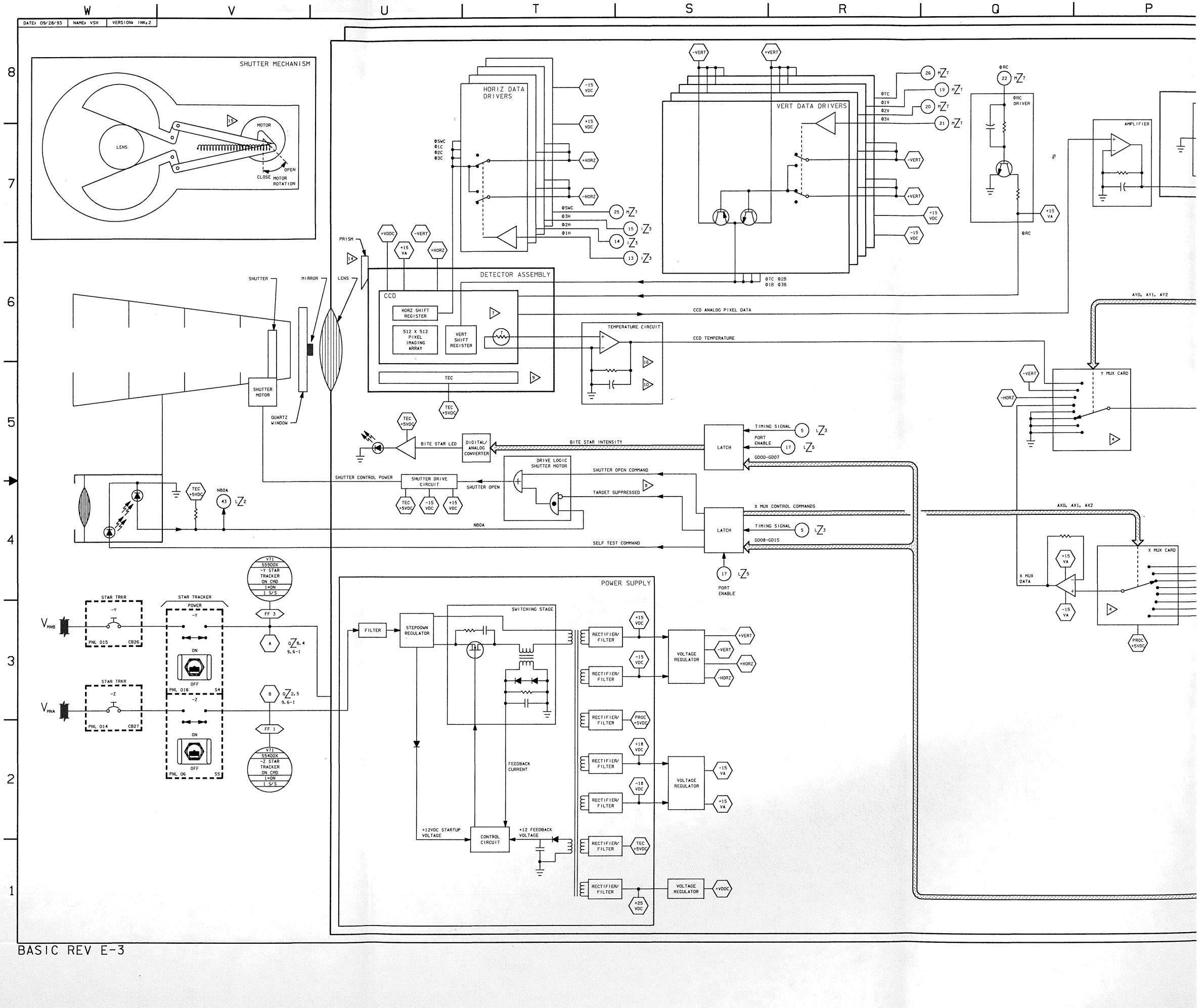

BASIC REV E-3

DATE: 08/05/94	NAME: JMB	VERSION: BPT.2
DATE: 08/10/94	NAME: MAG	VERSION: INK.1
DATE: 08/30/94	NAME: MDU	VERSION: INK.2

PLATFORM ELECTRONICS NO. 1

STARTUP SEQUENCER (CAGE, START, GYROS, CLOSE GIMBAL GYRO LOOPS, ISSUE IN OPERATE)
- CAGE OR AND P
- CAGE IR AND A2
- START GYROS
- SWITCH GYROS TO RUN
- IN OPERATE

CURRENT MONITOR (OUT OF TOLERANCE) → 125 MSEC DELAY
19.2 KHZ
GIMBAL LOOP FL

PLATFORM ELECTRONICS NO. 2
- IN OPERATE
- 3 CHANNEL TEMPERATURE CONTROL AMP
  - PLATFORM TEMP SAFE
  - <156.5 ±3°F
  - >146.5 ±3°F
  - >150 ±3°F
  - PLATFORM TEMP READY
  - VERTICAL GYRO TEMP
  - AZIMUTH GYRO TEMP
  - AZIMUTH TCA
  - VERTICAL TCA
  - GIMBAL TCA
  - 28 VDC
  - GIMBAL TEMP
  - PULSE WIDTH MODULATOR
- 19.2 KHZ INNER ROLL DEMOD
  - COARSE
  - FINE

IMU 3
IMU 2
IMU 1

DIGITAL I/O
- INPUT SYSTEM STATUS AND BITE DISCRETES
- INPUT SYSTEM DISCRETE REGISTER
- OUTPUT SYSTEM DISCRETE REGISTER
  - PITCH & SWITCH
  - GYRO SLEW ±X,Y,Z
  - GYPTO ±X,Y,Z
  - BITE SUM FAIL
- WATCHDOG TIMER
- WATCHDOG TIMER OVERFLOW
- I/O BITE DETECTION
- I/O FAIL
- INTERRUPT CONTROL
- 200 HZ
- 16 BIT ACCUMULATOR
- +X, -X, +Y, -Y, +Z, -Z
- READ AND RESET

MUX
- MSG OUT
- MSG IN
- WORD
- MICRO CONTROLLER
- MANCHESTER TO PARALLEL CONVERTER
- COMPARITOR (TRANSMIT ONLY)
- PARALLEL TO MANCHESTER SERIAL CONVERTER
- RCV
- XMIT
- END AROUND COMPARE FL
- 5 VDC
- TRANSMISSION WORD 1 FAIL
- TRANSMISSION WORD 2 FAIL
- PARITY, GAP, MANCHESTER ERROR DETECTION
- COMM GOOD
- TEMP READY
- TEMP SAFE
- MUX FAIL
- MUX STARTUP TEST FL
- DMA PARALLEL TEST FL
- DMA GRANT TEST FL
- DMA REQUEST FL
- MUX BITE
- WATCHDOG TIMER OVERFLOW
- BITE SUM FAIL
- HAINS GOOD
- CIRCUIT CARD OVERTEMP
- MUX CARD OVERTEMP DETECTION

MEMORY CARD
- PROM OPERATIONAL FLIGHT PROGRAM CODE
- DYNAMIC RAM WORKING STORAGE
- EE PROM EE ROR RELATED DATA FOR POST FLIGHT ANALYSIS

A/D CONVERTER
- DC A/D
- AC A/D
- A/D MICRO-PROCESSOR
- MAIN CPU BUS
- COMPOSITE GIMBAL ANGLES
- 1X/8X DELTA > .7°
- RESOLVER MISSING (6)
- AZ 8X, AZ 1X, PIT 8X, PIT 1X, OR 8X, OR 1X
- A/D PROM FL
- DC OFFSET FL
- AC OFFSET FL
- DC GAIN FL
- AC GAIN FL
- A/D RAM FL

CPU CARD
- MAIN CPU
- DC/DC FL
- MUX FL
- RESOLVER FL
- CIRCUIT CARD OVERTEMP
- DISC PWR SUP FL
- PLATFORM FL
- A/D FL
- DGTL SBSY FL
- BITE SUM FAIL
- PULSE ACCUM FL (PWR ON)
- RAM PATTERN FL (PWR ON)
- MEM ERR CORR SELF TEST (PWR ON)
- DOR WRAP AROUND FL
- MTU TAG TIMER FL
- MULTIPLE BIT ERROR
- CPU INST SET TEST FL
- DIVIDE BY ZERO
- FLOATING POINT OVERFLOW
- SQ ROOT OF NEG NUMBER
- PROM CHECK SUM FL
- EE PROM CHECK SUM FL (PWR ON)
- DGTL SBSY FL
- DC CHANNEL FL
- AC CHANNEL FL
- A/D CONVETER INT FL
- GIMBAL ANG CHECK SUM FL
- A/D FL
- DAL VOLTAGE FL
- PULSE ACCUM OVERFLOW
- 1X/8X DELTA > .7°
- IR > ±1° XCPT IN GIMBAL FLIP
- SEQUENCER TEST FL (PWR ON)
- GWS FL
- GIMBAL LOOP FL
- PLATFORM FL
- CARD OVERTEMP DETECT

MESSAGE IN DISCRETE · MESSAGE OUT DISCRETE · WORD DISCRETE

V71 X2021B IMU 1 HAINS GOOD 1=GOOD	V71 X2022B IMU 1 MUX FAIL 1=FAIL	V71 X2023B IMU 1 A/D FAIL 1=FAIL	V71 X2024B IMU 1 PLATFORM FAIL 1=FAIL	V71 X2025B IMU 1 DGTL SBSY FAIL 1=FAIL	V71 X2026B IMU 1 DC/DC CARD FAIL 1=FAIL
V71 X2027B IMU 1 DSCRT PWR SUP FAIL 1=FAIL	V71 X2028B IMU 1 RSVLR FAIL 1=FAIL	V71 X2029B IMU 1 CRCT CARD OVERTEMP 1=OVERTEMP	V71 X2030B IMU 1 TRANS WD 1 FAIL 1=FAIL	V71 X2031B IMU 1 TRANS WD 2 FAIL 1=FAIL	V71 X2032B IMU 1 D1/D8 SEQ 1=HIGH
V71 X2033B IMU 1 D2 SEQ 1=CAGE	V71 X2034B IMU 1 D3 SEQ 1=OFF	V71 X2035B IMU 1 D4 SEQ 1=CAGE	V71 X2036B IMU 1 D5 SEQ 1=LOW	V71 R2040B IMU 1 OMEGA R -120 TO +120°/HR	V71 H2060B IMU 1 INNER ROLL/R BX 148.5 TO 11.5
V71 H2080B IMU 1 OUTER ROLL/X 1X 0 TO 360 DEG	V71 H2100B IMU 1 OUTER ROLL/X 8X 0 TO 45 DEG	V71 H2120B IMU 1 PITCH/Y 1X 0 TO 360 DEG	V71 H2140B IMU 1 PITCH/Y 8X 0 TO 45 DEG	V71 H2160B IMU 1 AZIMUTH/Z 1X 0 TO 360 DEG	V71 H2180B IMU 1 AZIMUTH/Z 8X 0 TO 45 DEG
V71 L2200B IMU 1 ACCUM VX FT/SEC	V71 L2220B IMU 1 ACCUM VY FT/SEC	V71 L2240B IMU 1 ACCUM VZ FT/SEC	V71 H2260P IMU 1 ECHO 1 OCTAL	V71 H2280P IMU 1 ECHO 2 OCTAL	V71 K2547B IMU 1 SLEW Z NEG 1=NEGATIVE
V71 K2521B IMU 1 TORQUE X -8.0 TO +7.5ARCSEC	V71 K2525B IMU 1 TORQUE Y -8.0 TO +7.5ARCSEC	V71 K2531B IMU 1 TORQUE Z -8.0 TO +7.5ARCSEC	V71 K2541B IMU 1 ACCEL SCALE FACTOR 1=HIGH	V71 K2543B IMU 1 SLEW X NEG 1=NEGATIVE	V71 K2545B IMU 1 SLEW Y NEG 1=NEGATIVE
V71 K2542B IMU 1 SLEW X POS 1=POSITIVE	V71 K2544B IMU 1 SLEW Y POS 1=POSITIVE	V71 K2546B IMU 1 SLEW Z POS 1=POSITIVE			
V71 X2401** IMU 1 IN OPR MODE 1=OPERATE	V71 X2404X IMU 1 PLATFORM TEMP READY 1=READY	V71 X2405X IMU 1 PLATFORM TEMP SAFE 1=SAFE			
V71 X2406X IMU 1 TEMP READY ALWAYS 1	V71 X2407X IMU 1 TEMP SAFE ALWAYS 1	V71 X2401X IMU 1 COMMUNICATIONS GOOD 1=GOOD			
V71 K2576X IMU 1 OPER MODE CMD 1=ON					

1. THE REDUNDANT RATE AXIS IS IN THE XY PLANE INCLINED 26.5° FROM THE +X AXIS TOWARD THE +Y AXIS
2. BFS FAILS IF LOGIC 0
3. THE PARENT WORDS FOR THE DISCRETE SIGNALS OF IMU 1 (2,3) ARE V71M2020P (M3020P, M4020P) OPS 9 DOWNLIST AT 5 S/S
4. AS THE PITCH GIMBAL APPROACHES ±90 DEGREES ANY SMALL DEVIATION IN INNER ROLL WILL CAUSE VERY HIGH OUTER ROLL RATES AS THE OUTER ROLL LOOP TRIES TO NULL INNER ROLL. THIS IS A NATURAL GIMBAL FLIP AND PREVENTS THE PITCH GIMBAL FROM EXCEEDING ±90 DEGREES. FOR PURE PITCH MOTION THERE WILL BE NO INNER ROLL SIGNAL TO INITIATE THIS NATURAL GIMBAL FLIP. IF THE PITCH GIMBAL REACHES ±92 DEGREES THE HAINS CPU ISSUES THE PITCH SWITCH DISCRETE CAUSING THE OUTER ROLL LOOP GAIN TO BE GREATLY INCREASED SO THAT ANY SIGNAL, INCLUDING NOISE, WILL GENERATE A GIMBAL FLIP
5. THIS PARAMETER IS DERIVED FROM A LINEAR PICKOFF RATHER THAN AN ACTUAL 8X RESOLVER. FOR GPC TRANSPARENCY THE HAINS CPU FORMATS IT AS AN 8X RESOLVER. ITS DOWNLIST FORMAT IS THE SAME AS THE OTHER 8X RESOLVERS, BUT HARDWARE LIMITS THE RANGE TO 10.5 DEGREES EITHER SIDE OF ZERO. DISPLAY SCALING REMOVES THE FACTOR OF 8 AND PROVIDES A MODULO 360 REPRESENTATION WHERE -1 DEGREE APPEARS AS 359 DEGREES
6. THE DOWNLIST FORMAT FOR THIS PARAMETER IS THE SAME AS THE OTHER 1X RESOLVERS. HARDWARE LIMITS THE RANGE TO 112.5 DEGREES EITHER SIDE OF ZERO DEGREES
7. THE DOWNLIST SCALING OF THESE PARAMETERS IS 0 TO 360 DEGREES. THEY ARE RESCALED TO A RANGE OF 0 TO 45 FOR DISPLAY TO REMOVE THE FACTOR OF 8
8. HAINS TELEMETRY DOES NOT REFLECT ACTUAL HARDWARE 8X AND 1X RESOLVER DATA. THE HAINS CPU (WHICH CREATES THE DOWNLIST) RECEIVES ONLY THE COMPOSITE ANGLE FROM THE A/D CONVERTER. FOR GPC TRANSPARENCY THE HAINS CPU DERIVES, FROM THE COMPOSITE ANGLE, 1X AND 8X ANGLES WHICH DIFFER ONLY IN SCALE AND TRUNCATION UNLESS THE A/D CONVERTER DETECTS A HARDWARE 1X/8X DIFFERENCE OF >0.7 DEGREE IN WHICH CASE THE 1X VALUE IS INCREASED BY 5 DEGREES
9. HAINS VELOCITY CHANNELS HAVE ONLY A SINGLE GAIN OF 0.0075 FT/SEC/PULSE. FOR FLIGHT SOFTWARE TRANSPARENCY THE HAINS CPU SCALES THE OUTPUT TO 0.034 FT/SEC/PULSE FOR LOW GAIN AND 0.0034 FT/SEC/PULSE FOR HIGH GAIN AS REQUESTED BY THE GPC
10. VELOCITY DATA OUTPUT OVERFLOWS BEYOND 2257.6 FOR LOW GAIN AND BEYOND 225.76 FOR HIGH GAIN

NOTES:

7 HAINS 1

SIGNATURE	DATE	
DSGN V.S. HUNTER	6/17/94	NATIONAL AERONAUTICS AND SPACE ADMINISTRATION LYNDON B. JOHNSON SPACE CENTER HOUSTON, TEXAS
DR		
ENGR C.R. ALFORD		INERTIAL MEASUREMENT UNIT-HAINS
ENGR		
APP		
APP		DWG NO 9.7
CHK S.K. KIMBREL	9-7-94	SPACE SHUTTLE
LTR E PCN 4		ALL
		126.5 X 34 PAGE SHEET 1 OF 1

BASIC REV E-4

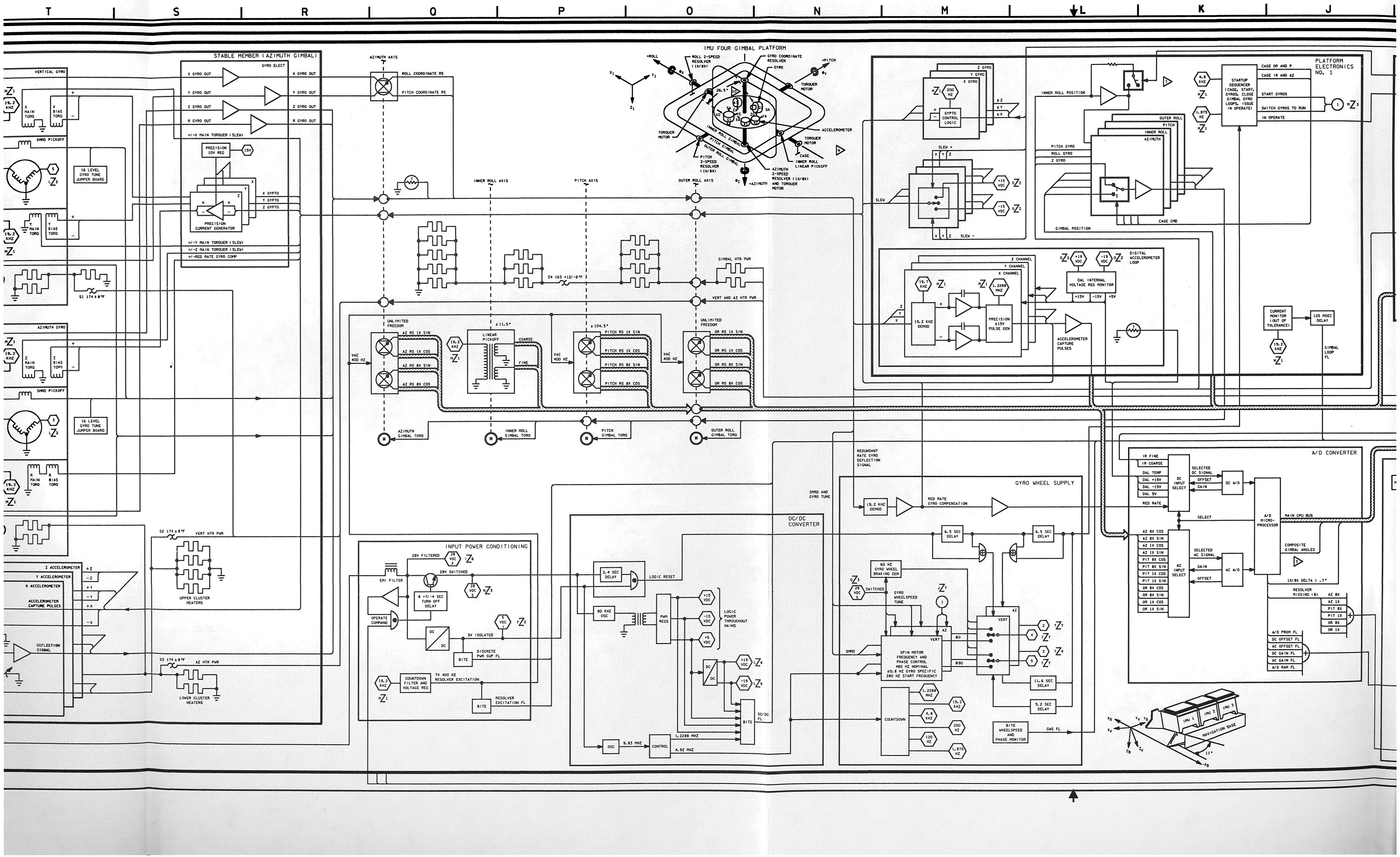

T S R Q P O N M L K J
STABLE MEMBER (AZIMUTH GIMBAL)
GYRO ELECT
X GYRO OUT
Y GYRO OUT
Z GYRO OUT
R GYRO OUT
+/-X MAIN TORQUER (SLEW)
PRECISION 10V REG
PRECISION CURRENT GENERATOR
+/-Y MAIN TORQUER (SLEW)
+/-Z MAIN TORQUER (SLEW)
+/-RED RATE GYRO COMP
VERTICAL GYRO
SMRD PICKOFF
16 LEVEL GYRO TUNE JUMPER BOARD
AZIMUTH GYRO
AZIMUTH AXIS
ROLL COORDINATE RS
PITCH COORDINATE RS
INNER ROLL AXIS
PITCH AXIS
OUTER ROLL AXIS
IMU FOUR GIMBAL PLATFORM
ROLL 2-SPEED RESOLVER (1X/8X)
GYRO COORDINATE RESOLVER
GYRO
TORQUER MOTOR
ACCELEROMETER
INNER ROLL GIMBAL
PITCH GIMBAL
OUTER ROLL GIMBAL
PITCH 2-SPEED RESOLVER (1X/8X)
AZIMUTH 2-SPEED RESOLVER (1X/8X) AND TORQUER MOTOR
INNER ROLL LINEAR PICKOFF
CASE
PLATFORM ELECTRONICS NO. 1
STARTUP SEQUENCER (CAGE, START, GYROS, CLOSE GIMBAL GYRO LOOPS, ISSUE IN OPERATE)
CAGE OR AND P
CAGE IR AND A2
START GYROS
SWITCH GYROS TO RUN
IN OPERATE
GYPTO CONTROL LOGIC
INNER ROLL POSITION
GIMBAL POSITION
CAGE CMD
DIGITAL ACCELEROMETER LOOP
DAL INTERNAL VOLTAGE REG MONITOR
19.2 KHZ DEMOD
PRECISION ±15V PULSE GEN
ACCELEROMETER CAPTURE PULSES
CURRENT MONITOR (OUT OF TOLERANCE)
125 MSEC DELAY
GIMBAL LOOP FL
S4 163 +12/-8°F
GIMBAL HTR PWR
VERT AND AZ HTR PWR
UNLIMITED FREEDOM
LINEAR PICKOFF
COARSE
FINE
AZ RS 1X SIN
AZ RS 1X COS
AZ RS 8X SIN
AZ RS 8X COS
PITCH RS 1X SIN
PITCH RS 1X COS
PITCH RS 8X SIN
PITCH RS 8X COS
OR RS 1X SIN
OR RS 1X COS
OR RS 8X SIN
OR RS 8X COS
VAC 400 HZ
AZIMUTH GIMBAL TORQ
INNER ROLL GIMBAL TORQ
PITCH GIMBAL TORQ
OUTER ROLL GIMBAL TORQ
REDUNDANT RATE GYRO DEFLECTION SIGNAL
SMRD AND GYRO TUNE
GYRO WHEEL SUPPLY
19.2 KHZ DEMOD
RED RATE GYRO COMPENSATION
6.5 SEC DELAY
60 HZ GYRO WHEEL BRAKING GEN
GYRO WHEELSPEED TUNE
SPIN MOTOR FREQUENCY AND PHASE CONTROL 480 HZ NOMINAL ±0.8 HZ GYRO SPECIFIC 280 HZ START FREQUENCY
COUNTDOWN
11.6 SEC DELAY
5.2 SEC DELAY
BITE WHEELSPEED AND PHASE MONITOR
GWS FL
A/D CONVERTER
DC INPUT SELECT
DC A/D
AC INPUT SELECT
AC A/D
A/D MICRO-PROCESSOR
MAIN CPU BUS
COMPOSITE GIMBAL ANGLES
RESOLVER MISSING (6)
A/D PROM FL
DC OFFSET FL
AC OFFSET FL
DC GAIN FL
AC GAIN FL
A/D RAM FL
DC/DC CONVERTER
2.4 SEC DELAY
LOGIC RESET
80 KHZ OSC
PWM REGS
LOGIC POWER THROUGHOUT HAINS
DC/DC FL
OSC
9.83 MHZ
CONTROL
1.2288 MHZ
4.92 MHZ
INPUT POWER CONDITIONING
28V FILTERED
28V SWITCHED
EMI FILTER
8 +7/-4 SEC TURN OFF DELAY
OPERATE COMMAND
5V ISOLATED
DISCRETE PWR SUP FL
COUNTDOWN FILTER AND VOLTAGE REG
7V 400 HZ RESOLVER EXCITATION
RESOLVER EXCITATION FL
S2 174 ±8°F
VERT HTR PWR
UPPER CLUSTER HEATERS
S3 174 ±8°F
AZ HTR PWR
LOWER CLUSTER HEATERS
Z ACCELEROMETER
Y ACCELEROMETER
X ACCELEROMETER
ACCELEROMETER CAPTURE PULSES
DEFLECTION SIGNAL
NAVIGATION BASE
IMU 1
IMU 2
IMU 3

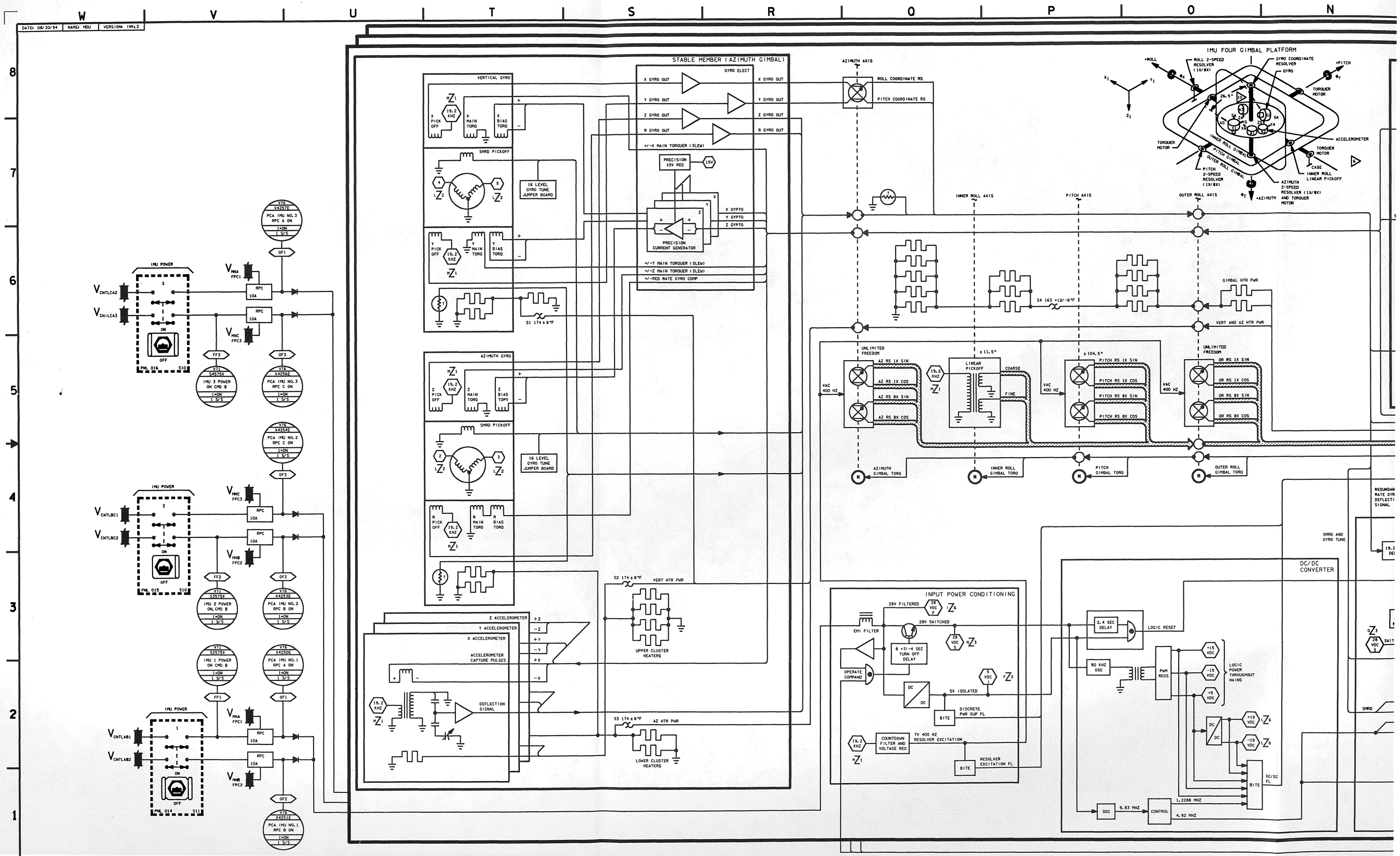

DATE: 08/30/94
NAME: MDU
VERSION: INK 2
STABLE MEMBER (AZIMUTH GIMBAL)
VERTICAL GYRO
SMRD PICKOFF
16 LEVEL GYRO TUNE JUMPER BOARD
AZIMUTH GYRO
GYRO ELECT
X GYRO OUT
Y GYRO OUT
Z GYRO OUT
R GYRO OUT
+/-X MAIN TORQUER (SLEW)
PRECISION 10V REG
PRECISION CURRENT GENERATOR
+/-Y MAIN TORQUER (SLEW)
+/-Z MAIN TORQUER (SLEW)
+/-RED RATE GYRO COMP
X GYPTO
Y GYPTO
Z GYPTO
S1 174 ± 8°F
S2 174 ± 8°F
S3 174 ± 8°F
VERT HTR PWR
AZ HTR PWR
UPPER CLUSTER HEATERS
LOWER CLUSTER HEATERS
Z ACCELEROMETER
Y ACCELEROMETER
X ACCELEROMETER
ACCELEROMETER CAPTURE PULSES
DEFLECTION SIGNAL
IMU POWER
PNL 016
PNL 015
PNL 014
IMU 3 POWER ON CMD B
IMU 2 POWER ON CMD B
IMU 1 POWER ON CMD B
PCA IMU NO. 3 RPC A ON
PCA IMU NO. 3 RPC C ON
PCA IMU NO. 2 RPC C ON
PCA IMU NO. 2 RPC B ON
PCA IMU NO. 1 RPC A ON
PCA IMU NO. 1 RPC B ON
AZIMUTH AXIS
ROLL COORDINATE RS
PITCH COORDINATE RS
INNER ROLL AXIS
PITCH AXIS
OUTER ROLL AXIS
GIMBAL HTR PWR
VERT AND AZ HTR PWR
UNLIMITED FREEDOM
AZ RS 1X SIN
AZ RS 1X COS
AZ RS 8X SIN
AZ RS 8X COS
LINEAR PICKOFF
COARSE
FINE
PITCH RS 1X SIN
PITCH RS 1X COS
PITCH RS 8X SIN
PITCH RS 8X COS
OR RS 1X SIN
OR RS 1X COS
OR RS 8X SIN
OR RS 8X COS
VAC 400 HZ
AZIMUTH GIMBAL TORQ
INNER ROLL GIMBAL TORQ
PITCH GIMBAL TORQ
OUTER ROLL GIMBAL TORQ
INPUT POWER CONDITIONING
28V FILTERED
28V SWITCHED
EMI FILTER
8 +7/-4 SEC TURN OFF DELAY
OPERATE COMMAND
5V ISOLATED
DISCRETE PWR SUP FL
COUNTDOWN FILTER AND VOLTAGE REG
7V 400 HZ RESOLVER EXCITATION
RESOLVER EXCITATION FL
DC/DC CONVERTER
2.4 SEC DELAY
LOGIC RESET
80 KHZ OSC
PWM REGS
LOGIC POWER THROUGHOUT HAINS
DC/DC FL
OSC
9.83 MHZ
CONTROL
1.2288 MHZ
4.92 MHZ
IMU FOUR GIMBAL PLATFORM
ROLL 2-SPEED RESOLVER (1X/8X)
GYRO COORDINATE RESOLVER
GYRO
TORQUER MOTOR
ACCELEROMETER
INNER ROLL GIMBAL
PITCH GIMBAL
OUTER ROLL GIMBAL
PITCH 2-SPEED RESOLVER (1X/8X)
AZIMUTH 2-SPEED RESOLVER (1X/8X) AND TORQUER MOTOR
INNER ROLL LINEAR PICKOFF
CASE

BASIC REV E-4

DATE: 08/09/95	NAME: JMB	VERSION: BPT: 10
DATE: 08/14/95	NAME: LAM	VERSION: INR: 11
DATE: 07/25/96	NAME: MDU	VERSION: INR: 12

SRB

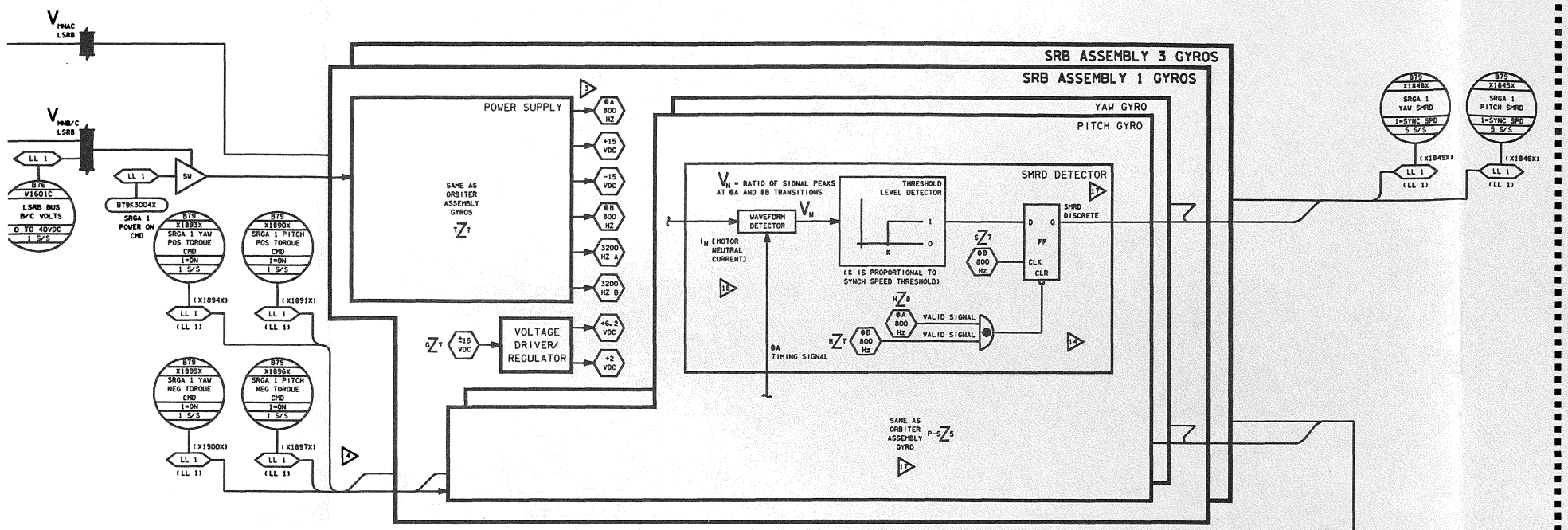

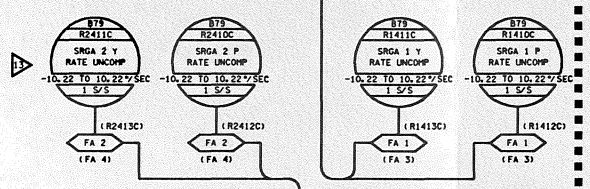

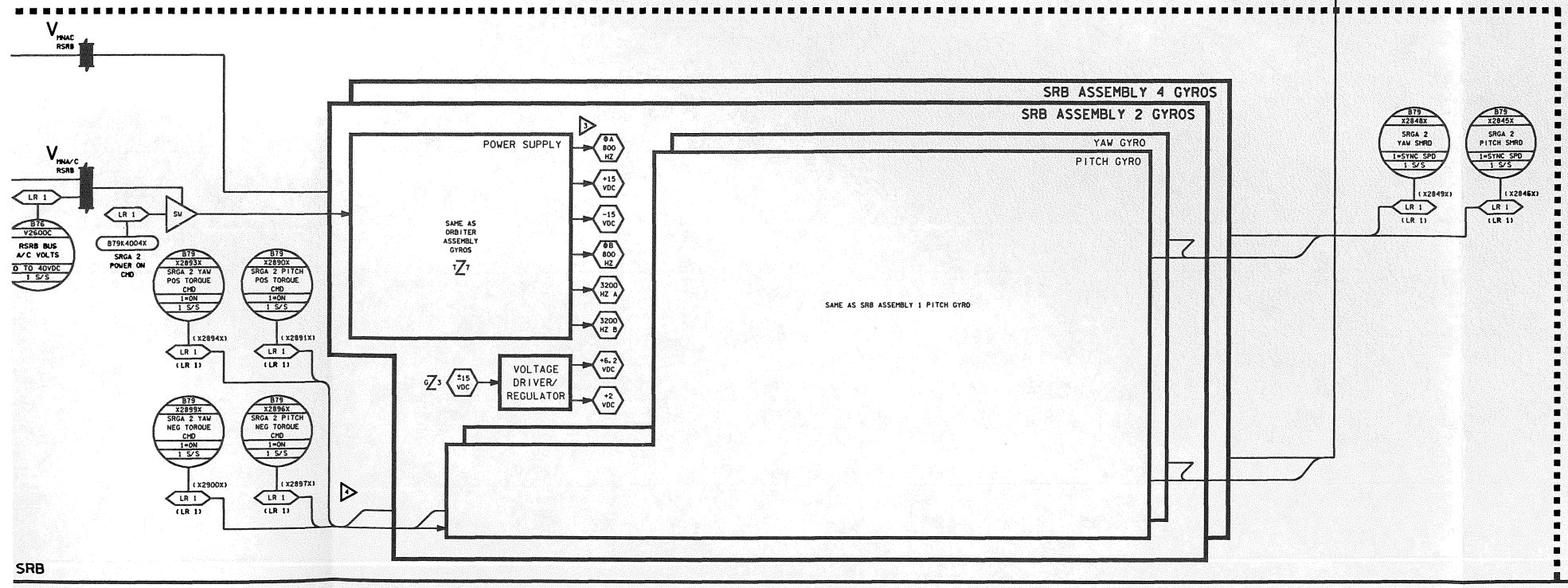

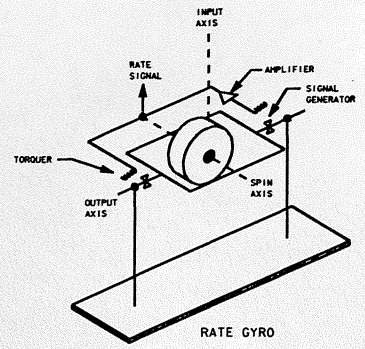

RATE GYRO

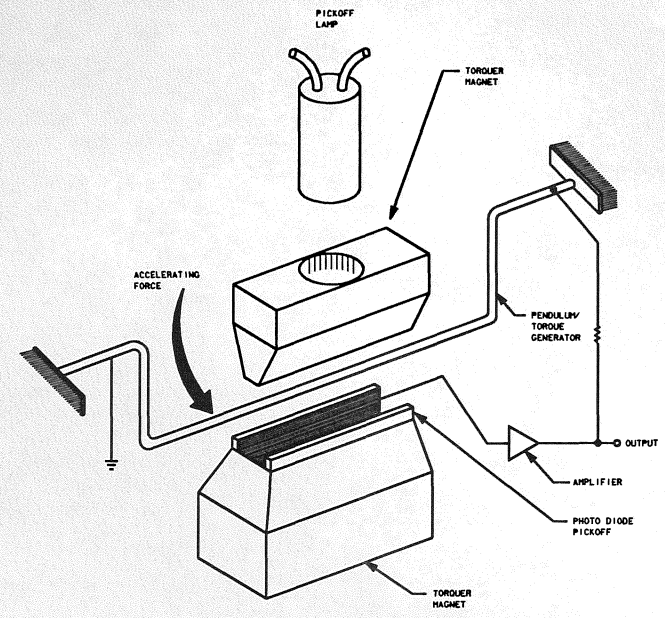

ACCELEROMETER

(A) AA LOCATIONS (ORBITER COORDINATES):

	X	Y	Z
AA 1	382.8	-6.6	398.2
AA 2	381.7	5.6	406.4
AA 3	381.7	11.6	406.4
AA 4	382.8	-12.8	398.2

(B) ORBITER RGA LOCATIONS (ORBITER COORDINATES):

	Y	X	Z
RGA 1	1304.5	13.0	295.25
RGA 2	1304.5	21.0	295.25
RGA 3	1304.5	-21.0	295.25
RGA 4	1304.5	-13.0	295.25

(C) THE SPIN MOTOR RUN DETECTOR (SMRD) CIRCUIT INDICATES THAT THE RATE GYRO IS SPINNING AT ITS SYNCHRONOUS SPEED OF 24000 RPM. THE SMRD CIRCUIT WILL INDICATE AN INVALID SIGNAL AT 88 PERCENT OR 102 PERCENT OF THE SPIN MOTOR SYNCHRONOUS SPEED. FOR POWER LOSS TO THE RATE GYRO MOTOR (THE SMRD CIRCUITRY REMAINS POWERED), THE SMRD SIGNAL IS MAINTAINED FOR APPROXIMATELY 17.6 SECONDS BEFORE BEING SET INVALID

(D) SRB RGA COMPENSATED RATES:

		LIMITS LOW/HIGH
SRGA 1 COMP PITCH RATE	V95R4260C	-10.22/10.22
SRGA 1 COMP YAW RATE	V95R4261C	-10.22/10.22
SRGA 2 COMP PITCH RATE	V95R4262C	-10.22/10.22
SRGA 2 COMP YAW RATE	V95R4263C	-10.22/10.22
SRGA 3 COMP PITCH RATE	V95R4270C	-10.22/10.22
SRGA 3 COMP YAW RATE	V95R4271C	-10.22/10.22
SRGA 4 COMP PITCH RATE	V95R4272C	-10.22/10.22
SRGA 4 COMP YAW RATE	V95R4273C	-10.22/10.22

(E) ORBITER RGA COMPENSATED RATES:

		LIMITS LOW/HIGH
RGA 1 COMP ROLL RATE	V95R4001C	-40.96/40.88
RGA 2 COMP ROLL RATE	V95R4002C	-40.96/40.88
RGA 3 COMP ROLL RATE	V95R4003C	-40.96/40.88
RGA 4 COMP ROLL RATE	V95R4004C	-40.96/40.88
RGA 1 COMP PITCH RATE	V95R4031C	-20.48/20.44
RGA 2 COMP PITCH RATE	V95R4032C	-20.48/20.44
RGA 3 COMP PITCH RATE	V95R4033C	-20.48/20.44
RGA 4 COMP PITCH RATE	V95R4034C	-20.48/20.44
RGA 1 COMP YAW RATE	V95R4061C	-20.48/20.44
RGA 2 COMP YAW RATE	V95R4062C	-20.48/20.44
RGA 3 COMP YAW RATE	V95R4063C	-20.48/20.44
RGA 4 COMP YAW RATE	V95R4064C	-20.48/20.44

(F) BMA COMPENSATED ACCELLERATION:

		LIMITS LOW/HIGH
AA 1 LATERAL	V95A4101C	-32.88/32.88
AA 2 LATERAL	V95A4102C	-32.88/32.88
AA 3 LATERAL	V95A4103C	-32.88/32.88
AA 4 LATERAL	V95A4104C	-32.88/32.88
AA 1 NORMAL	V95A4151C	-131.53/131.53
AA 2 NORMAL	V95A4152C	-131.53/131.53
AA 3 NORMAL	V95A4153C	-131.53/131.53
AA 4 NORMAL	V95A4154C	-131.53/131.53

(G) AA WARMUP TIME: 5 MIN

(H) RGA WARMUP TIME: 2 MIN

(I) AA SELF TEST LIMITS (ZERO SENSED ACCEL)
LATERAL 16.1 ± 1.7 FPS 2
NORMAL 64.4 ± 6.7 FPS 2

(J) RGA SELF TEST LIMITS (ZERO SENSED RATES)

	HIGH TEST	LOW TEST
ROLL	+20 ± 1.12	-20± 1.12 DEG/SEC
PITCH	+10 ± 0.56	-10± 0.56 DEG/SEC
YAW	+10 ± 0.56	-10± 0.56 DEG/SEC

(K) AA TRACKING TEST TOL (1-LOADS):

	NORMAL TOL	LATERAL TOL
OPS 1,6	0.063 G	0.08 G
OPS 3	0.2 G	0.13 G
IMVS	0.00 G	0.03 G

(L) RGA TRACKING TEST TOL (1-LOADS):

(|SEL RATE|) (LSF) + (CON) DEG/SEC

ORB RGA

ROLL		
OPS 1,6	0.08	0.80
OPS 3	0.088	1.19
PITCH/YAW		
OPS 1,6	0.065	0.55/0.63
OPS 3	0.060	0.65
ROLL		
IMVS		0.595
PITCH/YAW		
IMVS		0.322
SRB RGA		
PITCH/YAW		
OPS 1	0.05	0.45
IMVS		0.325

(M) TRO CMDS TO SRGA 1 AND 2 NOT ON DOWNLIST IN G1

(N) ΦA LEADS ΦB BY 90°

(O) SMRD DISCRETES DRIVE THE CRT DISPLAY (SPEC 041/OPS 8) STAT COLUMN (SMRD=PWR OFF OR GYRO NOT IN SYNC, BLANK=PWR ON AND GYRO IN SYNC)

NOTES:
(1) MOTOR NEUTRAL CURRENT PICKOFF RESISTOR IS PHYSICALLY LOCATED IN POWER SUPPLY. IT IS SHOWN HERE IN THE GYRO FOR SIMPLICITY

(P) SHAPE OF MOTOR NEUTRAL CURRENT WAVEFORM IS PROPORTIONAL TO SYNCHRONOUS MOTOR OPERATION

(Q) SRB SMRD DETECTOR LOGIC APPLIES TO KRYTOX RGAs ONLY

8 RGA/BMA

SIGNATURE		DATE	NATIONAL AERONAUTICS AND SPACE ADMINISTRATION LYNDON B. JOHNSON SPACE CENTER HOUSTON, TEXAS
DSGN	L. DUMIS	10/26/79	
DR			
ENGR	E. LIEBMAN		RATE GYROS/BODY MOUNTED ACCELEROMETERS
ENGR		7/26/96	
APP		7/26/96	
APP		7/26/96	SPACE SHUTTLE
CADD	S. K. Kinkead	7-29-96	ALL
LTR	E	PCN 6	126.5 X 34

DWG NO 9.8

PAGE SHEET 1 OF 1

BASIC REV E-6

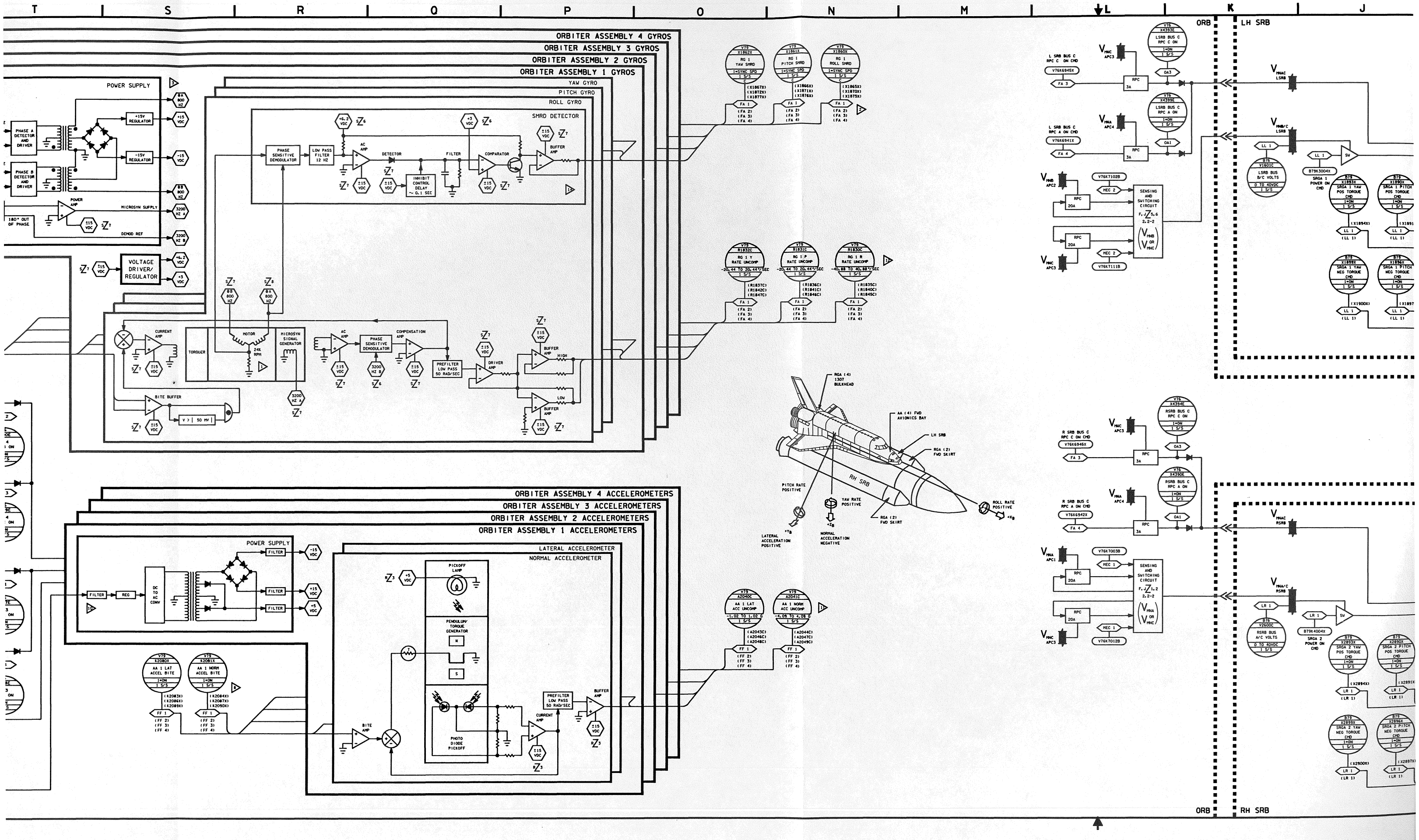

T
S
R
Q
P
O
N
M
L
K
J
ORBITER ASSEMBLY 4 GYROS
ORBITER ASSEMBLY 3 GYROS
ORBITER ASSEMBLY 2 GYROS
ORBITER ASSEMBLY 1 GYROS
YAW GYRO
PITCH GYRO
ROLL GYRO
SMRD DETECTOR
POWER SUPPLY
PHASE A DETECTOR AND DRIVER
PHASE B DETECTOR AND DRIVER
+15V REGULATOR
-15V REGULATOR
MICROSYN SUPPLY
DEMOD REF
180° OUT OF PHASE
VOLTAGE DRIVER/ REGULATOR
PHASE SENSITIVE DEMODULATOR
LOW PASS FILTER 12 HZ
AC AMP
DETECTOR
FILTER
COMPARATOR
BUFFER AMP
INHIBIT CONTROL DELAY ~ 0.1 SEC
CURRENT AMP
TORQUER
MOTOR
24K RPM
MICROSYN SIGNAL GENERATOR
COMPENSATION AMP
PREFILTER LOW PASS 50 RAD/SEC
DRIVER AMP
HIGH
LOW
BITE BUFFER
V > | 50 MV |
ORBITER ASSEMBLY 4 ACCELEROMETERS
ORBITER ASSEMBLY 3 ACCELEROMETERS
ORBITER ASSEMBLY 2 ACCELEROMETERS
ORBITER ASSEMBLY 1 ACCELEROMETERS
LATERAL ACCELEROMETER
NORMAL ACCELEROMETER
PICKOFF LAMP
PENDULUM/ TORQUE GENERATOR
PHOTO DIODE PICKOFF
BITE AMP
CURRENT AMP
DC TO AC CONV
REG
FILTER
AA 1 LAT ACCEL BITE
AA 1 NORM ACCEL BITE
RG 1 YAW SMRD
RG 1 PITCH SMRD
RG 1 ROLL SMRD
RG 1 Y RATE UNCOMP
RG 1 P RATE UNCOMP
RG 1 R RATE UNCOMP
AA 1 LAT ACC UNCOMP
AA 1 NORM ACC UNCOMP
RGA (4) 1307 BULKHEAD
AA (4) FWD AVIONICS BAY
LH SRB
RGA (2) FWD SKIRT
RH SRB
PITCH RATE POSITIVE
YAW RATE POSITIVE
ROLL RATE POSITIVE
LATERAL ACCELERATION POSITIVE
NORMAL ACCELERATION NEGATIVE
ORB
LH SRB
RH SRB
L SRB BUS C RPC C ON CMD
L SRB BUS C RPC A ON CMD
R SRB BUS C RPC C ON CMD
R SRB BUS C RPC A ON CMD
SENSING AND SWITCHING CIRCUIT
LSRB BUS B/C VOLTS
SRGA 1 YAW POS TORQUE CMD
SRGA 1 PITCH POS TORQUE CMD
SRGA 1 YAW NEG TORQUE CMD
SRGA 1 PITCH NEG TORQUE CMD
RSRB BUS A/C VOLTS
SRGA 2 YAW POS TORQUE CMD
SRGA 2 PITCH POS TORQUE CMD
SRGA 2 YAW NEG TORQUE CMD
SRGA 2 PITCH NEG TORQUE CMD

DATE= 07/25/96 | NAME= MDU | VERSION# IN#=12

W V U T S R Q P O N

8 7 6 5 4 3 2 1

ORBITER ASSEMBLY 4 GYROS
ORBITER ASSEMBLY 3 GYROS
ORBITER ASSEMBLY 2 GYROS
ORBITER ASSEMBLY 1 GYROS
YAW GYRO
PITCH GYRO
ROLL GYRO

RGA
RPC
OA1
OA3
OA2
OF 2
OF 3
OF 4
ON
OFF
PML 015A S13
PML 016A S2
PML 015A S2
PML 014A S2
PML 015E CB27
PML 014E CB28
PML 015F S14
PML 016F S14
MN B
MN A
ACCEL 2
ACCEL 1
ACCEL 4
ACCEL 3
3A
1.2K

V79 V76 S1844E X4296E RGA 4 PWR CMD C ON — RGA 4 RPC C ON
V79 V76 S1839E X4297E RGA 3 PWR CMD C ON — RGA 3 RPC C ON
V79 V76 S1834E X4298E RGA 2 PWR CMD B ON — RGA 2 RPC B ON
V79 V76 S1829E X4293E RGA 1 PWR CMD A ON — RGA 1 RPC A ON
V79 V76 S1824E X4294E RGA 1 PWR CMD B ON — RGA 1 RPC B ON
V79 V76 S2007E X4300E AA 2 PWR CMD B ON — AA 4 RPC B ON
V79 V76 S2004E X4299E AA 1 PWR CMD A ON — AA 4 RPC C ON
V79 V76 S2010E X4298E AA 3 PWR CMD C ON — AA 3 RPC C ON
V79 V76 S2015E X4299E AA 4 PWR CMD C ON — AA 4 RPC C ON

POWER SUPPLY
3200 HZ
FREQUENCY DIVIDER (÷ 2)
6400 HZ OSCILLATOR
TO PWR SPLY CKTS
5VDC 6.2VDC 17VDC
POWER SUPPLY REGULATOR
FILTER
FREQUENCY DIVIDER (÷ 4) AND DRIVER
ØA 800 HZ 0°
-180°
ØB 800 HZ -90°
-270°
PHASE A DETECTOR AND DRIVER
PHASE B DETECTOR AND DRIVER
+15V REGULATOR
-15V REGULATOR
POWER AMP
MICROSYN SUPPLY
DEMOD REF
BUFFER AMP
PHASE SHIFT DRIVER
180° OUT OF PHASE
ØA 800 HZ
+15 VDC
-15 VDC
ØB 800 HZ
3200 HZ A
3200 HZ B
±15 VDC
VOLTAGE DRIVER/ REGULATOR
+6.2 VDC
+3 VDC

V79 K1902C RG 1 YAW CMD -20 TO +20°/SEC 1 S/S (K1907C) (K1912C) (K1917C) FA 1 (FA 2) (FA 3) (FA 4)
V79 K1901C RG 1 PITCH TRO CMD -20 TO +20°/SEC 1 S/S (K1906C) (K1911C) (K1916C) FA 1 (FA 2) (FA 3) (FA 4)
V79 K1900C RG 1 ROLL TRO CMD -40 TO +40°/SEC 1 S/S (K1905C) (K1910C) (K1915C) FA 1 (FA 2) (FA 3) (FA 4)

CURRENT AMP
TORQUER
MOTOR 24K RPM
MICROSYN SIGNAL GENERATOR
BITE BUFFER
V > | 50 MV |
AC AMP
PHASE SENSITIVE DEMODULATOR
COMPENSATION AMP
PREFILTER LOW PASS 50 RAD/SEC
DRIVER AMP
BUFFER AMP HIGH
BUFFER AMP LOW

SMRD DETECTOR
PHASE SENSITIVE DEMODULATOR
LOW PASS FILTER 12 HZ
AC AMP
DETECTOR
FILTER
COMPARATOR
BUFFER AMP
INHIBIT CONTROL DELAY ~ 0.1 SEC

V79 X1862C RG 1 YAW SMRD 1=SYNC SPD 1 S/S C (X1867X) (X1872X) (X1877X) FA 1 (FA 2) (FA 3) (FA 4)
V79 X1861C RG 1 PITCH SMRD 1=SYNC SPD 1 S/S C (X1866X) (X1871X) (X1876X) FA 1 (FA 2) (FA 3) (FA 4)
V79 X1860C RG 1 ROLL SMRD 1=SYNC SPD 1 S/S C (X1865X) (X1870X) (X1875X) FA 1 (FA 2) (FA 3) (FA 4)

V79 R1832C RG 1 Y RATE UNCOMP -20.44 TO 20.44°/SEC 1 S/S (R1837C) (R1842C) (R1847C) FA 1 (FA 2) (FA 3) (FA 4)
V79 R1831C RG 1 P RATE UNCOMP -20.44 TO 20.44°/SEC 1 S/S (R1836C) (R1841C) (R1846C) FA 1 (FA 2) (FA 3) (FA 4)
V79 R1830C RG 1 R RATE UNCOMP -40.88 TO 40.88°/SEC 1 S/S (R1835C) (R1840C) (R1845C) FA 1 (FA 2) (FA 3) (FA 4)

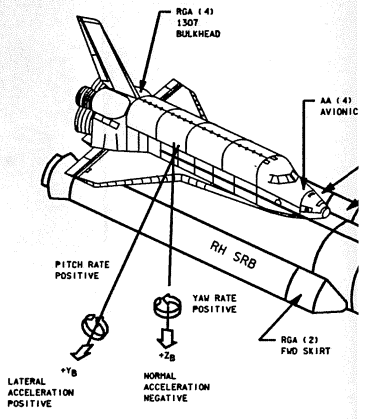

ORBITER ASSEMBLY 4 ACCELEROMETERS
ORBITER ASSEMBLY 3 ACCELEROMETERS
ORBITER ASSEMBLY 2 ACCELEROMETERS
ORBITER ASSEMBLY 1 ACCELEROMETERS
LATERAL ACCELEROMETER
NORMAL ACCELEROMETER

POWER SUPPLY
FILTER
REG
DC TO DC CONV
-15 VDC
+15 VDC
+5 VDC

V79 K2080X AA 1 LAT ACCEL BITE 1=ON 1 S/S (K2083X) (K2086X) (K2089X) FF 1 (FF 2) (FF 3) (FF 4)
V79 K2081X AA 1 NORM ACCEL BITE 1=ON 1 S/S (K2084X) (K2087X) (K2090X) FF 1 (FF 2) (FF 3) (FF 4)

BITE AMP
PICKOFF LAMP
PENDULUM/ TORQUE GENERATOR
N
S
PHOTO DIODE PICKOFF
CURRENT AMP
PREFILTER LOW PASS 50 RAD/SEC
BUFFER AMP
±15 VDC
+5 VDC

V79 A2040C AA 1 LAT ACC UNCOMP -1.02 TO 1.02 G 1 S/S (A2043C) (A2046C) (A2049C) FF 1 (FF 2) (FF 3) (FF 4)
V79 A2041C AA 1 NORM ACC UNCOMP -4.09 TO 4.09 G 1 S/S (A2044C) (A2047C) (A2049C) FF 1 (FF 2) (FF 3) (FF 4)

BASIC REV E-6

DATE: 08/18/90	NAME: MAG	VERSION: INK: 13
DATE: 07/28/94	NAME: PSD	VERSION: INK: 14
DATE: 08/04/94	NAME: VSH	VERSION: INK: 15

ADTA 4

ADTA 2

ADTA 3

ADTA 1

TRANSDUCER PaU

TRANSDUCER PaC

TRANSDUCER PaL

TRANSDUCER PS

TRANSDUCER TEMP

SERIAL SHIFT REGISTER

20 BIT BINARY COUNTER

SENSOR WINDOW

PS CONTROL

RESET

SHIFT ENABLE

COUNTER ENABLE

PS DATA SELECT

PS MEMORY SELECT

READ ONLY MEMORY (24 WORDS BY 16 BITS)

MEMORY

OFFSET

SLOPE

1 MHZ CLOCK

500 KHZ CLOCK

CLOCK GENERATOR

4 MHZ CRYSTAL OSCILLATOR

2 MHZ

1 MHZ

500 KHZ

REG ALL ZEROS

FRAME MARK

SENSOR WINDOW

COUNTER

36K COUNT

38K COUNT

A/D CONVERTER

ADDRESSABLE SWITCH

POLARITY DETECTOR

CONTROL LOGIC

A/D SWITCHING LADDER

SEQUENTIAL APPROXIMATION REGISTER

BIT 7-18 I/O DATA

A/D TEST

TEMP BRIDGE

TT HI

TT LO

DISCRETE INPUT BUFFER

LOW TEST CMD

HIGH TEST CMD

DIGITAL OUTPUT

PARALLEL SERIAL OUT STORAGE BUFFER

MANCHESTER ENCODER

SERIAL DIGITAL DATA

OUTPUT CONTROL

MESSAGE DISCRETE (GATE)

WORD DISCRETE (GATE)

ADTA SELF TEST LIMITS

	HI TEST	LO TEST	
P_S	0.814 ±.001	24.888 ±.001	INHG
PaC	5.475 ±.002	29.529 ±.002	INHG
PaU	2.742 ±.002	21.710 ±.002	INHG
PaL	1.710 ±.002	14.715 ±.002	INHG
T	173.58 ±.02	16.52 ±.02	DEG C
PS DOT	1.383 ±.0015	5.589±.0015	INHG/MIN

WORD REQUEST

MESSAGE REQUEST

I/O DATA PRE-SIGNAL FLOW DATA BUS

SERIAL TO PARALLEL CONVERTER

DIGITAL PROCESSOR

I/O DATA

ADDRESS AND CONTROL

CPU

CPU DATA

READ ONLY MEMORY 1536 20 BIT WORDS

READ/WRITE MEMORY 512 10 BIT HALF-WORDS

I/O DEVICE SELECTOR LOGIC

STORAGE BUFFER UPDATE

A/D COMPLETE

START A/D

ANALOG ADDRESS (4 BITS)

PS SELECT — DATA SELECT / MEMORY SELECT

PaC SELECT — DATA SELECT / MEMORY SELECT

PaL SELECT — DATA SELECT / MEMORY SELECT

PaU SELECT — DATA SELECT / MEMORY SELECT

DISCRETE INPUT SELECT

POWER SUPPLY TEST

PWR SUPPLY

POWER SUPPLY INTERNAL 5V REG

OSCILLATOR/RAMP GENERATOR

45V ZENER

EMI FILTER

ADTA 1 LOW TEST CMD — V71K7301X — (K8301X) (K7801X) (K8801X) — (FF 3) (FF 2) (FF 4) — FF 1

ADTA 1 HIGH TEST CMD — V71K7302X — (K8302X) (K7802X) (K8802X) — (FF 3) (FF 2) (FF 4) — FF 1

NAV SENSOR FAIL — V72X45802X — FF 3 — C&W ELECTRONICS — AIR DATA (RED) — PNL F7

INPUT: V90X48401X ADTA DILEMMA — MOD: GRX — TEST: ▷ — ZONE: B4, A4

V71X7021B	(X8021B) (X7521B) (X8521B)	ADTA 1 GOOD	1=GOOD 1 S/S
V71X7034B	(X8034B) (X7534B) (X8534B)	ADTA 1 DISC INPUTS	1=GOOD 1 S/S
V71X7023B	(X8023B) (X7523B) (X8523B)	ADTA 1 HIGH TEST MODE	1=ON 1 S/S
V71X7024B	(X8024B) (X7524B) (X8524B)	ADTA 1 LOW TEST MODE	1=ON 1 S/S
V71X7025B	(X8025B) (X7525B) (X8525B)	ADTA 1 POL GOOD	1=GOOD 1 S/S
V71X7026B	(X8026B) (X7526B) (X8526B)	ADTA 1 PQU GOOD	1=GOOD 1 S/S
V71X7027B	(X8027B) (X7527B) (X8527B)	ADTA 1 PQC GOOD	1=GOOD 1 S/S
V71X7028B	(X8028B) (X7528B) (X8528B)	ADTA 1 PS GOOD	1=GOOD 1 S/S
V71X7029B	(X8029B) (X7529B) (X8529B)	ADTA 1 A/D CONV GOOD	1=GOOD 1 S/S
V71X7030B	(X8030B) (X7530B) (X8530B)	ADTA 1 ELEC GOOD	1=GOOD 1 S/S
V71X7031B	(X8031B) (X7531B) (X8531B)	ADTA 1 TEMP CKT GOOD	1=GOOD 1 S/S
V71X7032B	(X8032B) (X7532B) (X8532B)	ADTA 1 SUPPLY CHK GOOD	1=GOOD 1 S/S
V71X7033B	(X8033B) (X7533B) (X8533B)	ADTA 1 PWR SUP GOOD	1=GOOD 1 S/S
V71P7040B	(P8040B) (P7540B) (P8540B)	ADTA 1 STATIC PRESS	-36 TO +36 INHG 12.5 S/S
V71P7140B	(P8140B) (P7640B) (P8640B)	ADTA 1 PQU	-52 TO +52 INHG 12.5S/S
V71PT080B	(P8080B) (PT580B) (P8580B)	ADTA 1 PQC	-52 TO +52 INHG 12.5 S/S
V71T7100B	(T8100B) (T7600B) (T8600B)	ADTA 1 TOTAL TEMP	-655 TO +655 °C 1 S/S
V71P7120B	(P8120B) (P7620B) (P8620B)	ADTA 1 PQL	-52 TO +52 INHG 12.5 S/S

(S8300X) (S7800X) (S8800X) — V71S7700X — ADTA 1 PWR ON CMD 1=ON 1 S/S — FF 1 (FF 3) (FF 2) (FF 4)

MN C — ADTA 4 — 5A — CB20 — PNL D15&E

MN B — ADTA 2 — 5A — PNL D15&E — CB25

MN C — ADTA 3 — 5A — CB19 — PNL D14&E

MN A — ADTA 1 — 5A — CB26 — PNL D14&E

▷ SELF TEST EXERCISES STORED VALUES IN THE DIGITAL PROCESSOR AND PERFORMS A PRESSURE COMPARISON TEST. TOLERANCES ARE GIVEN FOR THE STORED DIGITAL PROCESSOR VALUES TO ALLOW FOR BINARY TO DECIMAL CONVERSION. MISCOMPARES IN THE PRESSURE COMPARISON TEST ARE ANNUNCIATED THROUGH BITE

▷ PS DOT (IN HG/MIN) IS NOT USED

▷ ADTA 1,2 AT 12.5 S/S
ADTA 3,4 AT 1 S/S

▷ ADTA WARMUP TIMEx 2 SEC

▷ MOTORS DRIVE THROUGH A DIFFERENTIAL ASSEMBLY

▷ V71MT020P (MB020P, MT520P, MB520P) ADTA 1 (3,2,4) MODE STATUS. THE ADTA DISCRETE EVENT OUTPUTS ARE SERIAL DIGITAL DATA OF THE MODE STATUS (PARENT) WORD

NOTES: ▷ FAILURES ARE DETERMINED BY COMPARING PARAMETER DIFFERENCES TO A CALCULATED THRESHOLD. FAILURES ARE DIRECTLY ISOLATED BY FDIR SOFTWARE, AND DILEMMAS MUST BE RESOLVED BY THE CREW

9 ADS

SIGNATURE	DATE
OSGN VICKI S. DOGGETT	10/15/79
OR	
ENGR KEVIN A. DUNN	
ENGR	
APP	
APP	
CHKD S.K. Kimble	8.9.94

NATIONAL AERONAUTICS AND SPACE ADMINISTRATION
LYNDON B. JOHNSON SPACE CENTER HOUSTON, TEXAS

AIR DATA SYSTEM

LTR E	PCN 4	126.5 X 34	SPACE SHUTTLE	ALL	DWG NO 9.9	PAGE	SHEET 1 OF 1

BASIC REV E-4

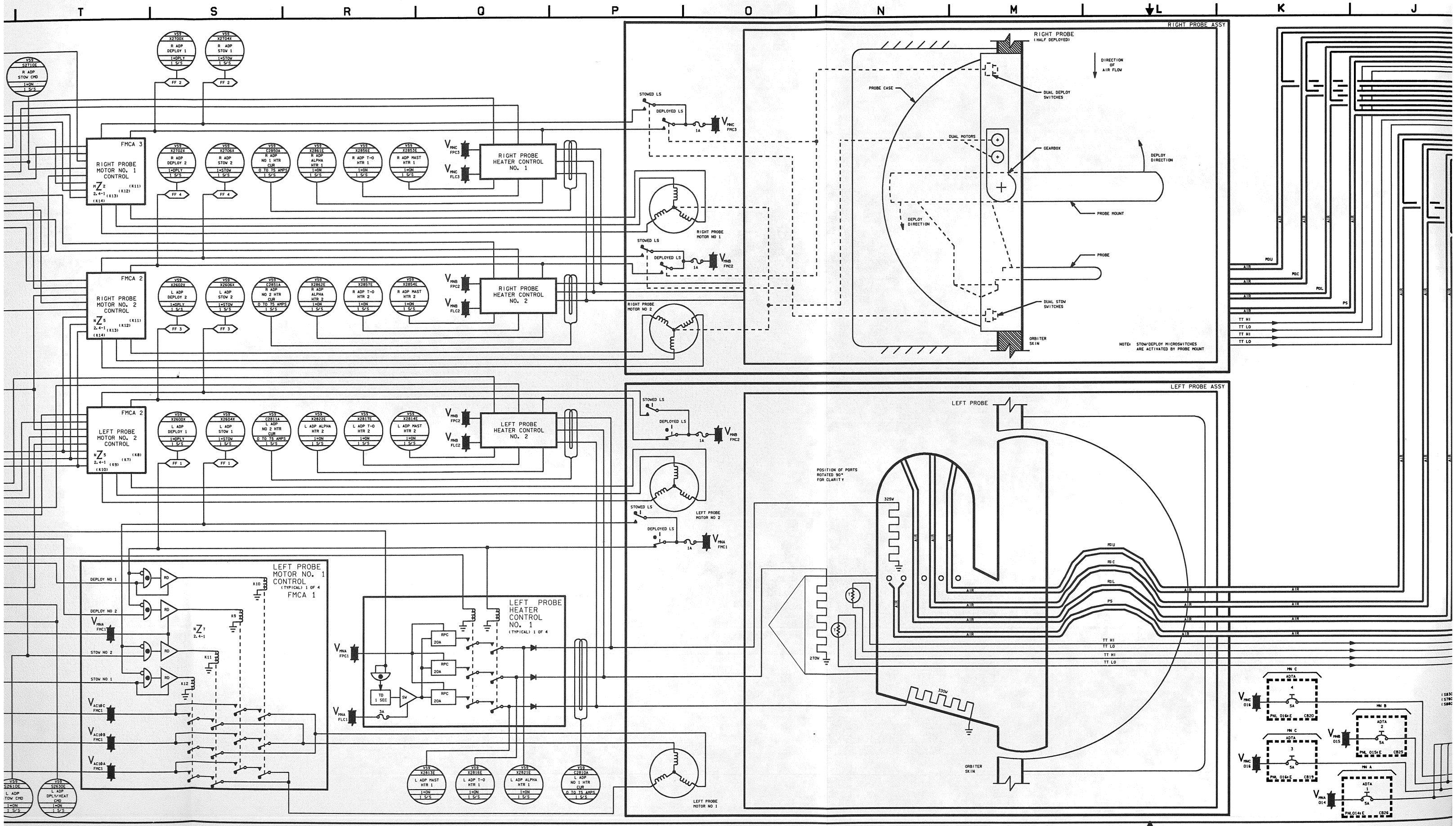

T
S
R
Q
P
O
N
M
L
K
J
RIGHT PROBE ASSY
RIGHT PROBE (HALF DEPLOYED)
DIRECTION OF AIR FLOW
PROBE CASE
DUAL DEPLOY SWITCHES
DUAL MOTORS
GEARBOX
DEPLOY DIRECTION
PROBE MOUNT
PROBE
DUAL STOW SWITCHES
ORBITER SKIN
NOTE: STOW/DEPLOY MICROSWITCHES ARE ACTIVATED BY PROBE MOUNT
FMCA 3
RIGHT PROBE MOTOR NO. 1 CONTROL
FMCA 2
RIGHT PROBE MOTOR NO. 2 CONTROL
RIGHT PROBE HEATER CONTROL NO. 1
RIGHT PROBE HEATER CONTROL NO. 2
RIGHT PROBE MOTOR NO 1
RIGHT PROBE MOTOR NO 2
STOWED LS
DEPLOYED LS
LEFT PROBE ASSY
LEFT PROBE
POSITION OF PORTS ROTATED 90° FOR CLARITY
LEFT PROBE MOTOR NO 2
LEFT PROBE MOTOR NO 1
LEFT PROBE MOTOR NO. 1 CONTROL (TYPICAL) 1 OF 4 FMCA 1
LEFT PROBE HEATER CONTROL NO. 1 (TYPICAL) 1 OF 4
DEPLOY NO 1
DEPLOY NO 2
STOW NO 2
STOW NO 1
TD 1 SEC
SW
RPC
20A
325W
330W
270W
AIR
TT HI
TT LO
PS
MN C
MN B
MN A
ADTA

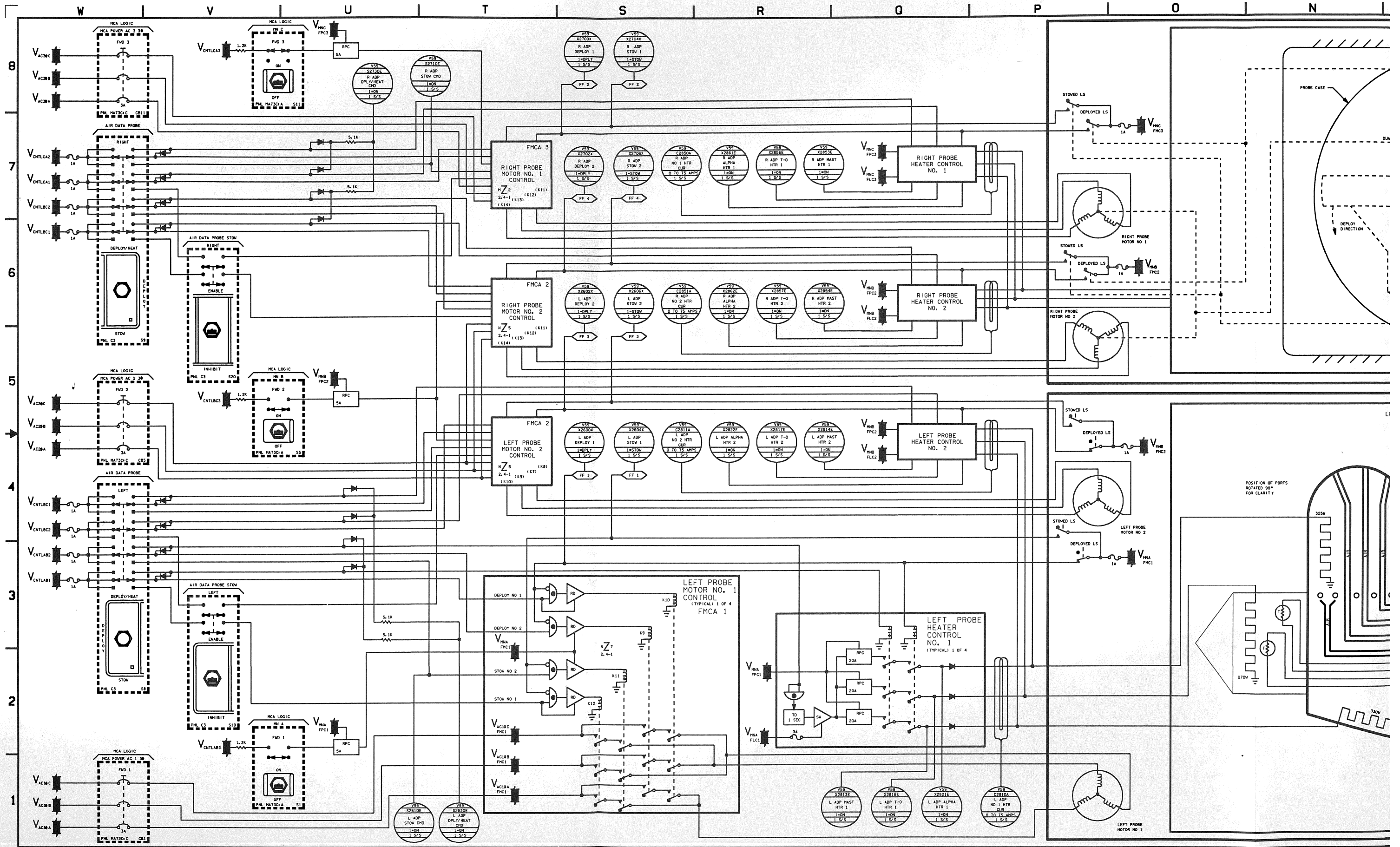

W
V
U
T
S
R
Q
P
O
N
8
7
6
5
4
3
2
1
MCA LOGIC
MCA POWER AC 3 3Ø
FWD 3
AIR DATA PROBE
RIGHT
DEPLOY/HEAT
STOW
AIR DATA PROBE STOW
ENABLE
INHIBIT
MCA POWER AC 2 3Ø
FWD 2
LEFT
MCA POWER AC 1 3Ø
FWD 1
FMCA 3
RIGHT PROBE MOTOR NO. 1 CONTROL
FMCA 2
RIGHT PROBE MOTOR NO. 2 CONTROL
LEFT PROBE MOTOR NO. 2 CONTROL
RIGHT PROBE HEATER CONTROL NO. 1
RIGHT PROBE HEATER CONTROL NO. 2
LEFT PROBE HEATER CONTROL NO. 2
LEFT PROBE MOTOR NO. 1 CONTROL (TYPICAL) 1 OF 4 FMCA 1
LEFT PROBE HEATER CONTROL NO. 1 (TYPICAL) 1 OF 4
DEPLOY NO 1
DEPLOY NO 2
STOW NO 2
STOW NO 1
STOWED LS
DEPLOYED LS
RIGHT PROBE MOTOR NO 1
RIGHT PROBE MOTOR NO 2
LEFT PROBE MOTOR NO 2
LEFT PROBE MOTOR NO 1
PROBE CASE
DEPLOY DIRECTION
POSITION OF PORTS ROTATED 90° FOR CLARITY
325W
270W
330W

BASIC REV E-4

DATE: 05/11/90	NAME: MDU	VERSION# INK: 1
DATE: 10/10/91	NAME: LAM	VERSION# INK: 1
DATE: 10/23/91	NAME: LAM	VERSION# INK: 2

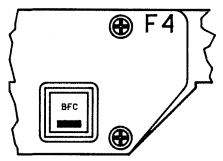

PNL F4

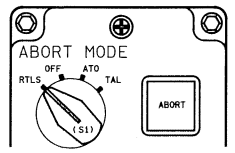

PNL F6

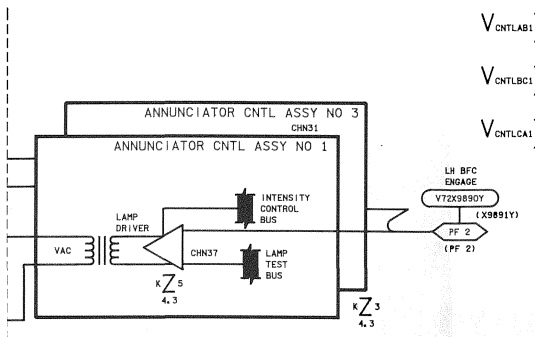

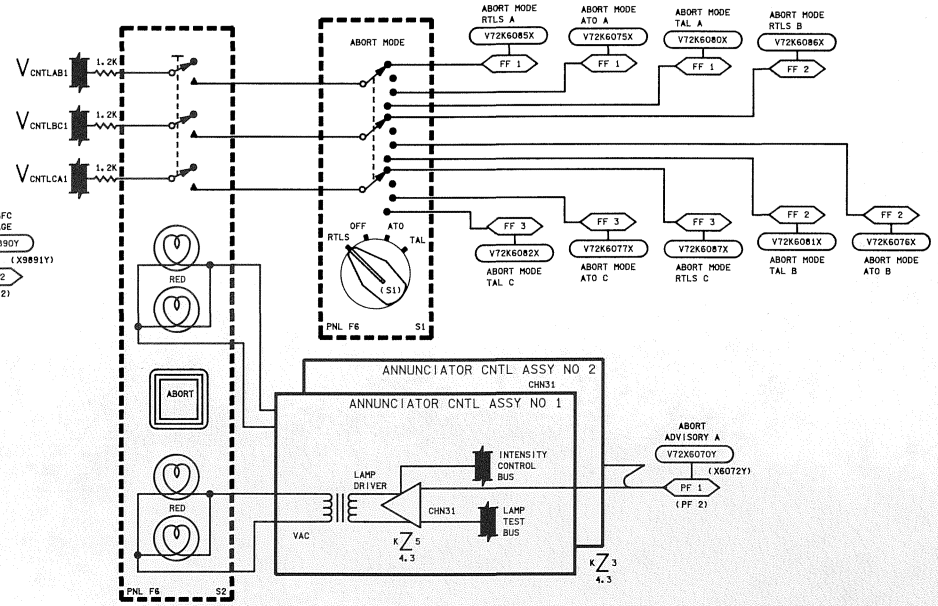

(TYPICAL 4 SWITCHES)

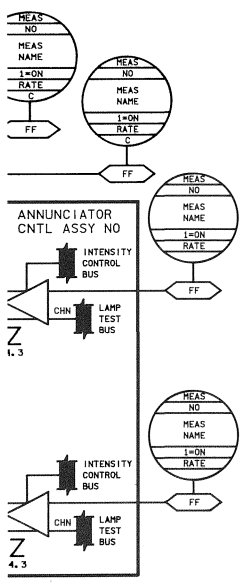

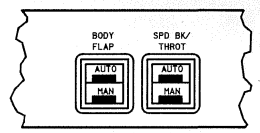

PNL F2

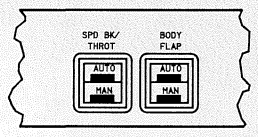

PNL F4

SWITCH NAME	PNL NO	SW NO	LIGHT LABEL	ANNUN CNTL Z 4.3	ASSY NO/ CHN	CON	V CNTL BUS	FF MDM	MEAS NO	MEAS NAME	MAX DWNLINK RATE
SPD BK/THROT	F2	S8	AUTO/MAN			1	AB1	1	V72K1570X	LH SPD BK/THROT A/M A	1 S/S
						2	BC1	2	V72K1571X	LH SPD BK/THROT A/M B	1 S/S
						3	CA1	3	V72K1572X	LH SPD BK/THROT A/M C	1 S/S
				K Z 5 4.3	1/25		---	1	V72X5136X	LH SPD BK AUTO LT	1 S/S
					1/27		---	2	V72X5137X	LH SPD BK MAN LT	1 S/S
BODY FLAP	F2	S9	AUTO/MAN			1	AB1	1	V72K4993X	LH BODY FLAP A/M A	1 S/S
						2	BC1	2	V72K4994X	LH BODY FLAP A/M B	1 S/S
						3	CA1	3	V72K4995X	LH BODY FLAP A/M C	1 S/S
				K Z 5 4.3	1/29		---	1	V72X4996X	LH BODY FLAP AUTO LT	1 S/S
					1/11		---	2	V72X4997X	LH BODY FLAP MAN LT	1 S/S

SWITCH NAME	PNL NO	SW NO	LIGHT LABEL	ANNUN CNTL Z 4.3	ASSY NO/ CHN	CON	V CNTL BUS	FF MDM	MEAS NO	MEAS NAME	MAX DWNLINK RATE
SPD BK/THROT	F4	S8	AUTO/MAN			1	BC2	2	V72K1600X	RH SPD BK/THROT A/M A	1 S/S
						2	CA2	3	V72K1601X	RH SPD BK/THROT A/M B	1 S/S
						3	BC3	4	V72K1602X	RH SPD BK/THROT A/M C	1 S/S
				K Z 4 4.3	2/26		---	3	V72X5134X	RH SPD BK AUTO LT	1 S/S
					2/28		---	4	V72X5135X	RH SPD BK MAN LT	1 S/S
BODY FLAP	F4	S9	AUTO/MAN			1	BC2	2	V72K4893X	RH BODY FLAP A/M A	1 S/S
						2	CA2	3	V72K4894X	RH BODY FLAP A/M B	1 S/S
						3	BC3	4	V72K4895X	RH BODY FLAP A/M C	1 S/S
				K Z 4 4.3	2/30		---	3	V72X4896X	RH BODY FLAP AUTO LT	1 S/S
					2/34		---	4	V72X4897X	RH BODY FLAP MAN LT	1 S/S

(TYPICAL 8 SWITCHES)

PNL F2

PNL F4

SWITCH NAME	PNL NO	SW NO	LIGHT LABEL	ANNUN CNTL Z 4.3	ASSY NO/ CHN	CON	V CNTL BUS	FF MDM	MEAS NO	MEAS NAME	MAX DWNLINK RATE
PITCH	F2	S2	AUTO			1	AB1	1	V72K5251X	LH PITCH AUTO MODE A	1 S/S
						2	BC1	2	V72K5252X	LH PITCH AUTO MODE B	1 S/S
						3	CA1	3	V72K5253X	LH PITCH AUTO MODE C	1 S/S
				K Z 5 4.3	1/13		---	1	V72X5240X	LH PITCH AUTO MODE LT	1 S/S
		S3	CSS			1	AB1	1	V72K5256X	LH PITCH CSS MODE A	1 S/S
						2	BC1	2	V72K5257X	LH PITCH CSS MODE B	1 S/S
						3	CA1	3	V72K5258X	LH PITCH CSS MODE C	1 S/S
					1/15		---	2	V72X5241X	LH PITCH CSS MODE LT	1 S/S
ROLL/YAW	F2	S5	AUTO			1	AB1	1	V72K5265X	LH R/Y AUTO MODE A	1 S/S
						2	BC1	2	V72K5266X	LH R/Y AUTO MODE B	1 S/S
						3	CA1	3	V72K5267X	LH R/Y AUTO MODE C	1 S/S
					1/19		---	1	V72X5243X	LH R/Y AUTO MODE LT	1 S/S
		S6	CSS			1	AB1	1	V72K5270X	LH R/Y CSS MODE A	1 S/S
						2	BC1	2	V72K5271X	LH R/Y CSS MODE B	1 S/S
						3	CA1	3	V72K5272X	LH R/Y CSS MODE C	1 S/S
				K Z 5 4.3	1/21		---	2	V72X5245X	LH R/Y CSS MODE LT	1 S/S

SWITCH NAME	PNL NO	SW NO	LIGHT LABEL	ANNUN CNTL Z 4.3	ASSY NO/ CHN	CON	V CNTL BUS	FF MDM	MEAS NO	MEAS NAME	MAX DWNLINK RATE
PITCH	F4	S2	AUTO			1	BC2	2	V72K5151X	RH PITCH AUTO MODE A	1 S/S
						2	CA2	3	V72K5152X	RH PITCH AUTO MODE B	1 S/S
						3	BC3	4	V72K5153X	RH PITCH AUTO MODE C	1 S/S
				K Z 4 4.3	2/14		---	3	V72X5140X	RH PITCH AUTO MODE LT	1 S/S
		S3	CSS			1	BC2	2	V72K5156X	RH PITCH CSS MODE A	1 S/S
						2	CA2	3	V72K5157X	RH PITCH CSS MODE B	1 S/S
						3	BC3	4	V72K5158X	RH PITCH CSS MODE C	1 S/S
					2/16		---	4	V72X5141X	RH PITCH CSS MODE LT	1 S/S
ROLL/YAW	F4	S5	AUTO			1	BC2	2	V72K5165X	RH R/Y AUTO MODE A	1 S/S
						2	CA2	3	V72K5166X	RH R/Y AUTO MODE B	1 S/S
						3	BC3	4	V72K5167X	RH R/Y AUTO MODE C	1 S/S
					2/20		---	3	V72X5143X	RH R/Y AUTO MODE LT	1 S/S
		S6	CSS			1	BC2	2	V72K5170X	RH R/Y CSS MODE A	1 S/S
						2	CA2	3	V72K5171X	RH R/Y CSS MODE B	1 S/S
						3	BC3	4	V72K5172X	RH R/Y CSS MODE C	1 S/S
				K Z 4 4.3	2/22		---	4	V72X5145X	RH R/Y CSS MODE LT	1 S/S

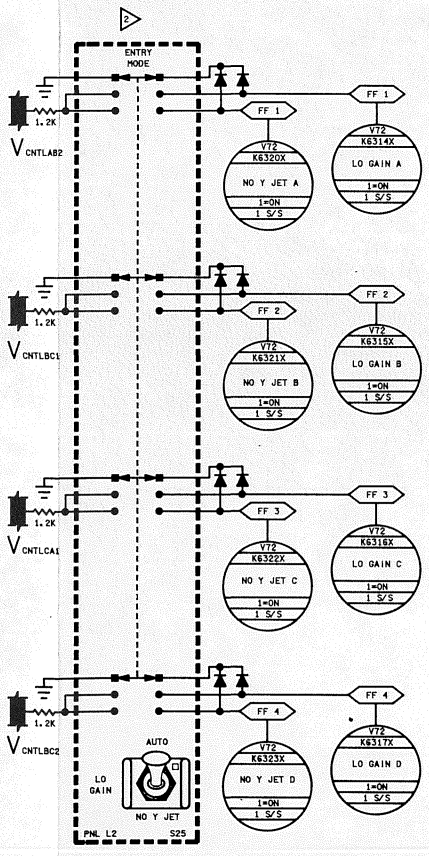

ENTRY MODE SWITCH SELECTION FILTER PROCESSING

THIS MATRIX SHOWS RM OUTPUT FOR THE VARIOUS STATE OF CONTACTS OF THE ENTRY MODE SWITCH. IF THE ENTRY_SW_OVERRIDE SIGNAL IS = +1, (ITEM 42, AUTO SEL ON SPEC 51 OVERRIDE DISPLAY), THE OUTPUT IS THE SAME AS IF THE CONTACT STATE WERE 0/0.

NO OF AVAILABLE CONTACTS ENERGIZED (+1)	LOW GAIN 0	LOW GAIN 1	LOW GAIN 2	LOW GAIN 3	LOW GAIN 4
NO Y JET 0	SEL L GAIN = 0* SEL NO Y JET = 0 ENT SW FAIL = 0	SEL L GAIN = 0* SEL NO Y JET = 0 ENT SW FAIL = 0	SEL L GAIN = 1 SEL NO Y JET = 0 ENT SW FAIL = 0	SEL L GAIN = 1 SEL NO Y JET = 0 ENT SW FAIL = 1	SEL L GAIN = 1 SEL NO Y JET = 0 ENT SW FAIL = 0
NO Y JET 1	SEL L GAIN = 0* SEL NO Y JET = 0 ENT SW FAIL = 0	SEL L GAIN = 0 SEL NO Y JET = 0 ENT SW FAIL = 1	SEL L GAIN = 0 SEL NO Y JET = 0 ENT SW FAIL = 1	SEL L GAIN = 1 SEL NO Y JET = 0 ENT SW FAIL = 1	SEL L GAIN = 1 SEL NO Y JET = 0 ENT SW FAIL = 1
NO Y JET 2	SEL L GAIN = 0 SEL NO Y JET = 1 ENT SW FAIL = 1	SEL L GAIN = 0 SEL NO Y JET = 0 ENT SW FAIL = 1	SEL L GAIN = 0 SEL NO Y JET = 0 ENT SW FAIL = 1	SEL L GAIN = 1 SEL NO Y JET = 0 ENT SW FAIL = 1	SEL L GAIN = 1 SEL NO Y JET = 0 ENT SW FAIL = 1
NO Y JET 3	SEL L GAIN = 0 SEL NO Y JET = 1 ENT SW FAIL = 1	SEL L GAIN = 0 SEL NO Y JET = 1 ENT SW FAIL = 1	SEL L GAIN = 0 SEL NO Y JET = 1 ENT SW FAIL = 1	SEL L GAIN = 0 SEL NO Y JET = 0 ENT SW FAIL = 1	SEL L GAIN = 1 SEL NO Y JET = 0 ENT SW FAIL = 1
NO Y JET 4	SEL L GAIN = 0 SEL NO Y JET = 1 ENT SW FAIL = 0	SEL L GAIN = 0 SEL NO Y JET = 1 ENT SW FAIL = 1	SEL L GAIN = 0 SEL NO Y JET = 1 ENT SW FAIL = 1	SEL L GAIN = 0 SEL NO Y JET = 1 ENT SW FAIL = 1	SEL L GAIN = 0 SEL NO Y JET = 0 ENT SW FAIL = 1

*FDIR SHALL OPERATE IN THIS STATE IF SEVEN OR MORE CONTACTS ARE AVAILABLE

- FDIR FOR FOUR-CONTACT SWITCHES SHALL CONSIDER ALL THE CONTACTS AVAILABLE FOR FDIR TO BE A REDUNDANT SET. FDIR SHALL TERMINATE IF LESS THAN SEVEN OF THE EIGHT CONTACTS ARE AVAILABLE, OR IF MORE THAN ONE CONTACT IS IN THE (+1) STATE. WHEN FDIR RUNS, A SINGLE CONTACT IN THE (+1) STATE WHILE ALL OTHER CONTACTS ARE IN THE ZERO STATE SHALL BE DECLARED FAILED IF THE CONDITION PERSISTS FOR THREE CONSECUTIVE CYCLES
- GAX MSG "G51 RL MODE SW" WILL APPEAR WHEN ENT SW FAIL = 1

NOTES: ▷ THE DATA IN THE TABLES REFER TO THE ASSOCIATED TYPICAL SWITCH CIRCUIT

10 FCS SW

SIGNATURE		DATE	NATIONAL AERONAUTICS AND SPACE ADMINISTRATION LYNDON B. JOHNSON SPACE CENTER HOUSTON, TEXAS
DSGN	MIKE BECKER	4-20-79	
DR			FCS MODE SWITCHES
ENGR	B.J. SCHOENBAUER		
ENGR	[illegible]	10-25-91	
APE	[illegible]	10/25/91	
PM	[illegible]	10/25/91	SPACE SHUTTLE
QA/M PLAN	J.K. Conley	10-30-91	ALL
LTR E	PCN 1		104.5 X 34

DWG NO 9.10

PAGE SHEET 1 OF 1

BASIC REV E-1

DATE: 10/23/91 | NAME: LAM | VERSION: INH-2

S R Q P O N M L K J

8 7 6 5 4 3 2 1

(TYPICAL 12 SWITCHES)

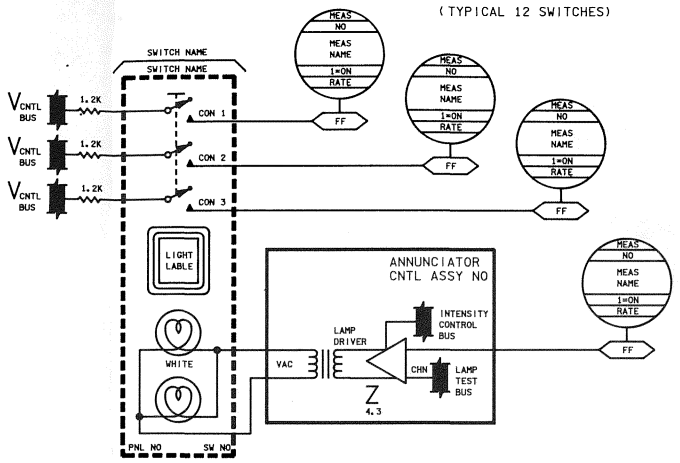

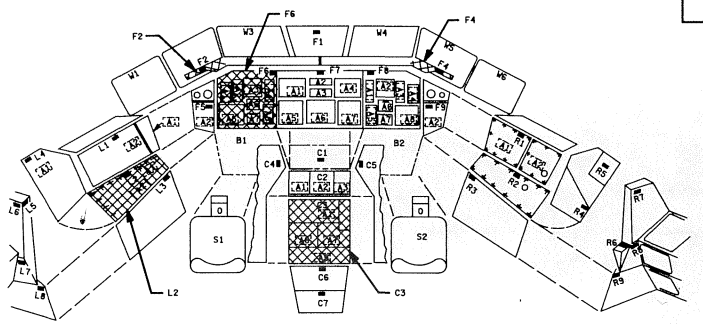

FLIGHT STATION

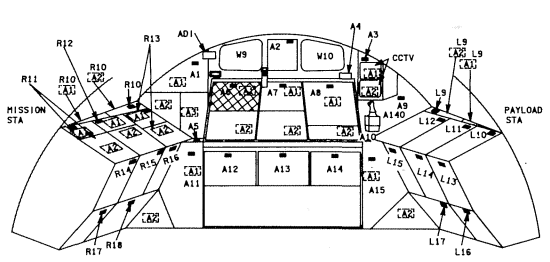

AFT STATION

(TYPICAL 36 SWITCHES)

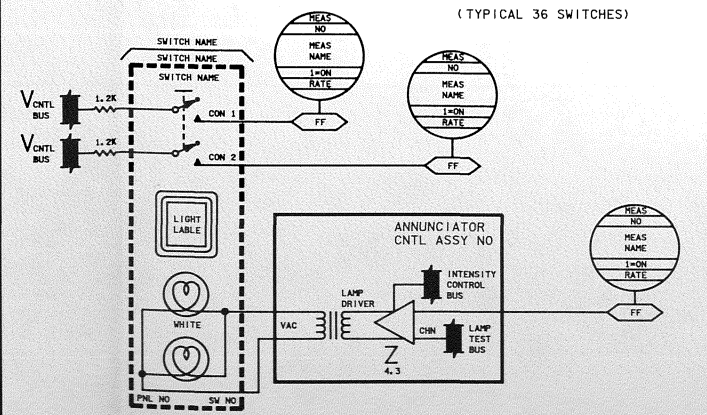

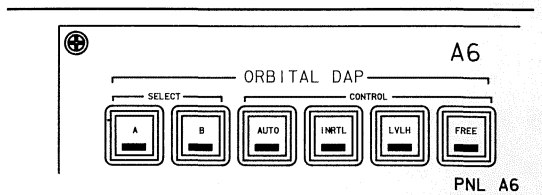

PNL A6

SWITCH NAME	PNL NO	SW NO	LIGHT LABEL	ANNUN CNTL Z 4.3 ASSY NO/CHN	CON	V_{CNTL} BUS	FF MDM	MEAS NO	MEAS NAME	MAX DWNLINK RATE
ORBITAL DAP, SELECT	A6	S8	A		1	CA2	3	V72K6430X	AFT DAP SELECT A-A	12.5 S/S
					2	BC2	4	V72K6431X	AFT DAP SELECT A-B	12.5 S/S
					3	AB2	1	V72K6419X	AFT DAP SELECT A-C	12.5 S/S
		S9	B		----		3	V72X6421X	AFT DAP SELECT A LT	5 S/S
				$KZ^2_{4.3}$ 4/1	1	CA2	3	V72K6432X	AFT DAP SELECT B-A	12.5 S/S
					2	BC2	4	V72K6433X	AFT DAP SELECT B-B	12.5 S/S
					3	AB2	1	V72K6420X	AFT DAP SELECT B-C	12.5 S/S
					----		3	V72X6422X	AFT DAP SELECT B LT	5 S/S
ORBITAL DAP, CONTROL	A6	S10	AUTO		1	CA2	3	V72K6490X	AFT DAP AUTO A	12.5 S/S
					2	BC2	4	V72K6491X	AFT DAP AUTO B	12.5 S/S
					3	AB2	1	V72K6492X	AFT DAP AUTO C	12.5 S/S
					----		3	V72X6498X	AFT DAP AUTO LT	5 S/S
		S11	INRTL	$KZ^2_{4.3}$ 4/5	1	CA2	3	V72K6495X	AFT DAP MAN INRTL A	12.5 S/S
					2	BC2	4	V72K6496X	AFT DAP MAN INRTL B	12.5 S/S
					3	AB2	1	V72K6497X	AFT DAP MAN INRTL C	12.5 S/S
					----		3	V72X6499X	AFT DAP MAN INRTL LT	1 S/S
		S12	LVLH	$KZ^1_{4.3}$ 5/1	1	CA2	3	V72K6517X	AFT DAP MAN LVLH A	1 S/S
					2	BC2	4	V72K6518X	AFT DAP MAN LVLH B	1 S/S
					3	AB2	1	V72K6415C	AFT DAP MAN LVLH C	1 S/S
					----		3	V72X6542X	AFT DAP MAN LVLH LT	1 S/S
		S13	FREE	$KZ^1_{4.3}$ 5/3	1	CA2	3	V72K6412X	AFT DAP MAN FREE DFT A	1 S/S
					2	BC2	4	V72K6413X	AFT DAP MAN FREE DFT B	1 S/S
					3	AB2	1	V72K6414X	AFT DAP MAN FREE DFT C	1 S/S
				$KZ^1_{4.3}$ 5/5	----		3	V72X6417X	AFT DAP MAN FREE DFT LT	1 S/S

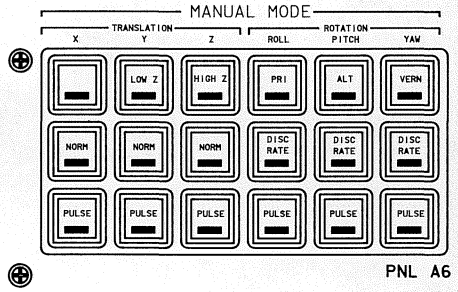

PNL A6

SWITCH NAME	PNL NO	SW NO	LIGHT LABEL	ANNUN CNTL Z 4.3 ASSY NO/CHN	CON	V_{CNTL} BUS	FF MDM	MEAS NO	MEAS NAME	MAX DWNLINK RATE
MANUAL MODE, TRANSLATION, X	A6	S14	(BLANK)		1	CA2	3	------	------	------
					2	BC2	4	------	------	------
					----		3	------	------	------
		S20	NORM	$KZ^2_{4.3}$ 4/9	1	CA2	3	V72K6510X	AFT TRANSL X NORM A	1 S/S
					2	BC2	4	V72K6511X	AFT TRANSL X NORM B	1 S/S
				$KZ^2_{4.3}$ 4/17	----		3	V72X6540X	AFT TRANSL X NORM LT	------
		S26	PULSE		1	CA2	3	V72K6512X	AFT TRANSL X PULSE A	1 S/S
					2	BC2	4	V72K6514X	AFT TRANSL X PULSE B	1 S/S
				$KZ^2_{4.3}$ 4/25	----		3	V72X6541X	AFT TRANSL X PULSE LT	------
MANUAL MODE, TRANSLATION, Y	A6	S15	LOW Z		1	CA2	3	V72K6527X	AFT TRANSL LOW Z A	1 S/S
					2	BC2	4	V72K6528X	AFT TRANSL LOW Z B	1 S/S
				$KZ^2_{4.3}$ 4/11	----		3	V72X6545X	AFT TRANSL LOW Z LT	------
		S21	NORM		1	CA2	3	V72K6520X	AFT TRANSL Y NORM A	1 S/S
					2	BC2	4	V72K6521X	AFT TRANSL Y NORM B	1 S/S
				$KZ^2_{4.3}$ 4/19	----		3	V72X6543X	AFT TRANSL Y NORM LT	------
		S27	PULSE		1	CA2	3	V72K6523X	AFT TRANSL Y PULSE A	1 S/S
					2	BC2	4	V72K6524X	AFT TRANSL Y PULSE B	1 S/S
				$KZ^2_{4.3}$ 4/27	----		3	V72X6544X	AFT TRANSL Y PULSE LT	------
MANUAL MODE, TRANSLATION, Z	A6	S16	HIGH Z		1	CA2	3	V72K6537X	AFT TRANSL Z HIGH A	1 S/S
					2	BC2	4	V72K6538X	AFT TRANSL Z HIGH B	1 S/S
				$KZ^2_{4.3}$ 4/13	----		3	V72X6548X	AFT TRANSL Z HIGH LT	------
		S22	NORM		1	CA2	3	V72K6530X	AFT TRANSL Z NORM A	1 S/S
					2	BC2	4	V72K6531X	AFT TRANSL Z NORM B	1 S/S
				$KZ^2_{4.3}$ 4/21	----		3	V72X6546X	AFT TRANSL Z NORM LT	------
		S28	PULSE		1	CA2	3	V72K6533X	AFT TRANSL Z PULSE A	1 S/S
					2	BC2	4	V72K6534X	AFT TRANSL Z PULSE B	1 S/S
				$KZ^2_{4.3}$ 4/29	----		3	V72X6547X	AFT TRANSL Z PULSE LT	------
MANUAL MODE, ROTATION, ROLL	A6	S17	PRI		1	CA2	3	V72K6505X	AFT RCS JETS NORM A	1 S/S
					2	BC2	4	V72K6506X	AFT RCS JETS NORM B	1 S/S
				$KZ^1_{4.3}$ 5/9	----		3	V72X6502X	AFT RCS JETS NORM LT	------
		S23	DISC RATE		1	CA2	3	V72K6440X	AFT ROT ROLL DISC A	1 S/S
					2	BC2	4	V72K6441X	AFT ROT ROLL DISC B	1 S/S
				$KZ^1_{4.3}$ 5/17	----		3	V72X6450X	AFT ROT ROLL DISC LT	------
		S29	PULSE		1	CA2	3	V72K6448X	AFT ROT ROLL PULSE A	1 S/S
					2	BC2	4	V72K6449X	AFT ROT ROLL PULSE B	1 S/S
				$KZ^1_{4.3}$ 5/25	----		3	V72X6452X	AFT ROT ROLL PULSE LT	------
MANUAL MODE, ROTATION, PITCH	A6	S18	ALT		1	CA2	3	V72K6410X	AFT ALT PRCS MODE A	1 S/S
					2	BC2	4	V72K6411X	AFT ALT PRCS MODE B	1 S/S
				$KZ^1_{4.3}$ 5/11	----		3	V72X6416X	AFT ALT PRCS MODE LT	------
		S24	DISC RATE		1	CA2	3	V72K6460X	AFT ROT PITCH DISC A	1 S/S
					2	BC2	4	V72K6461X	AFT ROT PITCH DISC B	1 S/S
				$KZ^1_{4.3}$ 5/19	----		3	V72X6470X	AFT ROT PITCH DISC LT	------
		S30	PULSE		1	CA2	3	V72K6468X	AFT ROT PITCH PULSE A	1 S/S
					2	BC2	4	V72K6469X	AFT ROT PITCH PULSE B	1 S/S
				$KZ^1_{4.3}$ 5/27	----		3	V72X6472X	AFT ROT PITCH PULSE LT	------
MANUAL MODE, ROTATION, YAW	A6	S19	VERN		1	CA2	3	V72K6507X	AFT RCS JETS VERN A	1 S/S
					2	BC2	4	V72K6508X	AFT RCS JETS VERN B	1 S/S
				$KZ^1_{4.3}$ 5/13	----		3	V72X6503X	AFT RCS JETS VERN LT	------
		S25	DISC RATE		1	CA2	3	V72K6480X	AFT ROT YAW DISC A	1 S/S
					2	BC2	4	V72K6481X	AFT ROT YAW DISC B	1 S/S
				$KZ^1_{4.3}$ 5/21	----		3	V72X6473X	AFT ROT YAW DISC LT	------
		S31	PULSE		1	CA2	3	V72K6488X	AFT ROT YAW PULSE A	1 S/S
					2	BC2	4	V72K6489X	AFT ROT YAW PULSE B	1 S/S
				$KZ^1_{4.3}$ 5/29	----		3	V72X6475X	AFT ROT YAW PULSE LT	------

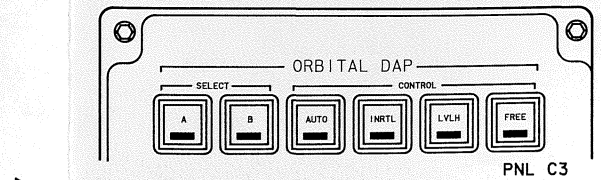

PNL C3

SWITCH NAME	PNL NO	SW NO	LIGHT LABEL	ANNUN CNTL Z 4.3 ASSY NO/CHN	CON	V_{CNTL} BUS	FF MDM	MEAS NO	MEAS NAME	MAX DWNLINK RATE
ORBITAL DAP, SELECT	C3	S1	A		1	AB3	1	V72K2801X	FWD DAP SELECT A-A	12.5 S/S
					2	BC3	2	V72K2802X	FWD DAP SELECT A-B	12.5 S/S
					3	CA3	3	V72K2805X	FWD DAP SELECT A-C	12.5 S/S
		S2	B		----		1	V72X2807X	FWD DAP SELECT A LT	5 S/S
				$KZ^3_{4.3}$ 3/2	1	AB3	1	V72K2803X	FWD DAP SELECT B-A	12.5 S/S
					2	BC3	2	V72K2804X	FWD DAP SELECT B-B	12.5 S/S
					3	CA3	3	V72K2806X	FWD DAP SELECT B-C	12.5 S/S
					----		1	V72X2808X	FWD DAP SELECT B LT	1 S/S
ORBITAL DAP, CONTROL	C3	S3	AUTO		1	AB3	1	V72K2840X	FWD DAP AUTO A	12.5 S/S
					2	BC3	2	V72K2841X	FWD DAP AUTO B	12.5 S/S
					3	CA3	3	V72K2842X	FWD DAP AUTO C	12.5 S/S
					----		1	V72X2850X	FWD DAP AUTO LT	5 S/S
		S4	INRTL	$KZ^3_{4.3}$ 3/6	1	AB3	1	V72K2845X	FWD DAP MAN INRTL A	12.5 S/S
					2	BC3	2	V72K2846X	FWD DAP MAN INRTL B	12.5 S/S
					3	CA3	3	V72K2847X	FWD DAP MAN INRTL C	12.5 S/S
					----		1	V72X2849X	FWD DAP MAN INRTL LT	1 S/S
		S5	LVLH	$KZ^5_{4.3}$ 3/2	1	AB3	1	V72K2864X	FWD RCS MAN LVLH A	1 S/S
					2	BC3	2	V72K2865X	FWD RCS MAN LVLH B	1 S/S
					3	CA3	3	V72K2895X	FWD RCS MAN LVLH C	1 S/S
					----		1	V72X2868X	FWD RCS MAN LVLH LT	5 S/S
		S6	FREE	$KZ^5_{4.3}$ 1/2	1	AB3	1	V72K2892X	FWD RCS MAN FREE DFT A	1 S/S
					2	BC3	2	V72K2893X	FWD RCS MAN FREE DFT B	1 S/S
					3	CA3	3	V72K2894X	FWD RCS MAN FREE DFT C	1 S/S
				$KZ^5_{4.3}$ 1/2	----		1	V72X2897X	FWD RCS MAN FREE DFT LT	1 S/S

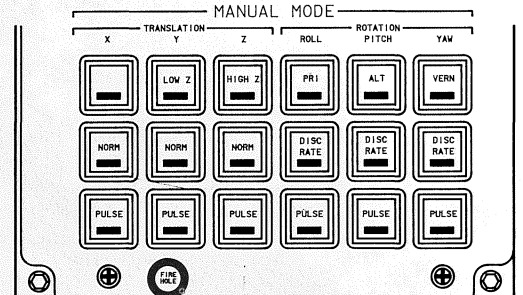

PNL C3

SWITCH NAME	PNL NO	SW NO	LIGHT LABEL	ANNUN CNTL Z 4.3 ASSY NO/CHN	CON	V_{CNTL} BUS	FF MDM	MEAS NO	MEAS NAME	MAX DWNLINK RATE
MANUAL MODE, TRANSLATION, X	C3	S16	(BLANK)		1	AB3	1	------	------	------
					2	BC3	2	------	------	------
					----		1	------	------	------
		S19	NORM	$KZ^3_{4.3}$ 3/10	1	AB3	1	V72K2860X	FWD TRANSL X NORM A	1 S/S
					2	BC3	2	V72K2861X	FWD TRANSL X NORM B	1 S/S
				$KZ^3_{4.3}$ 3/18	----		1	V72K2866X	FWD TRANSL X NORM LT	1 S/S
		S22	PULSE		1	AB3	1	V72K2862X	FWD TRANSL X PULSE A	1 S/S
					2	BC3	2	V72K2863X	FWD TRANSL X PULSE B	1 S/S
				$KZ^3_{4.3}$ 3/26	----		1	V72K2867X	FWD TRANSL X PULSE LT	1 S/S
MANUAL MODE, TRANSLATION, Y	C3	S17	LOW Z		1	AB3	1	V72K2874X	FWD TRANSL LOW Z A	1 S/S
					2	BC3	2	V72K2875X	FWD TRANSL LOW Z B	1 S/S
				$KZ^3_{4.3}$ 3/12	----		1	V72K2878X	FWD TRANSL LOW Z LT	1 S/S
		S20	NORM		1	AB3	1	V72K2870X	FWD TRANSL Y NORM A	1 S/S
					2	BC3	2	V72K2871X	FWD TRANSL Y NORM B	1 S/S
				$KZ^3_{4.3}$ 3/20	----		1	V72K2876X	FWD TRANSL Y NORM LT	1 S/S
		S23	PULSE		1	AB3	1	V72K2872X	FWD TRANSL Y PULSE A	1 S/S
					2	BC3	2	V72K2873X	FWD TRANSL Y PULSE B	1 S/S
				$KZ^3_{4.3}$ 3/28	----		1	V72K2877X	FWD TRANSL Y PULSE LT	1 S/S
MANUAL MODE, TRANSLATION, Z	C3	S18	HIGH Z		1	AB3	1	V72K2884X	FWD TRANSL Z HIGH A	1 S/S
					2	BC3	2	V72K2885X	FWD TRANSL Z HIGH B	1 S/S
				$KZ^3_{4.3}$ 3/14	----		1	V72K2888X	FWD TRANSL Z HIGH LT	1 S/S
		S21	NORM		1	AB3	1	V72K2880X	FWD TRANSL Z NORM A	1 S/S
					2	BC3	2	V72K2881X	FWD TRANSL Z NORM B	1 S/S
				$KZ^3_{4.3}$ 3/22	----		1	V72K2886X	FWD TRANSL Z NORM LT	1 S/S
		S24	PULSE		1	AB3	1	V72K2882X	FWD TRANSL Z PULSE A	1 S/S
					2	BC3	2	V72K2883X	FWD TRANSL Z PULSE B	1 S/S
				$KZ^3_{4.3}$ 3/30	----		1	V72K2887X	FWD TRANSL Z PULSE LT	1 S/S
MANUAL MODE, ROTATION, ROLL	C3	S7	PRI		1	AB3	1	V72K2851X	FWD RCS JETS NORM A	1 S/S
					2	BC3	2	V72K2852X	FWD RCS JETS NORM B	1 S/S
				$KZ^5_{4.3}$ 1/10	----		1	V72X2855X	FWD RCS JETS NORM LT	1 S/S
		S10	DISC RATE		1	AB3	1	V72K2812X	FWD ROT ROLL DISC A	1 S/S
					2	BC3	2	V72K2813X	FWD ROT ROLL DISC B	1 S/S
				$KZ^5_{4.3}$ 1/18	----		1	V72X2790X	FWD ROT ROLL DISC LT	1 S/S
		S13	PULSE		1	AB3	1	V72K2816X	FWD ROT ROLL PULSE A	1 S/S
					2	BC3	2	V72K2817X	FWD ROT ROLL PULSE B	1 S/S
				$KZ^5_{4.3}$ 1/26	----		1	V72X2792X	FWD ROT ROLL PULSE LT	1 S/S
MANUAL MODE, ROTATION, PITCH	C3	S8	ALT		1	AB3	1	V72K2890X	FWD ALT PRCS MODE A	1 S/S
					2	BC3	2	V72K2891X	FWD ALT PRCS MODE B	1 S/S
				$KZ^5_{4.3}$ 1/12	----		1	V72X2896X	FWD ALT PRCS MODE LT	1 S/S
		S11	DISC RATE		1	AB3	1	V72K2822X	FWD ROT PITCH DISC A	1 S/S
					2	BC3	2	V72K2823X	FWD ROT PITCH DISC B	1 S/S
				$KZ^5_{4.3}$ 1/20	----		1	V72X2793X	FWD ROT PITCH DISC LT	1 S/S
		S14	PULSE		1	AB3	1	V72K2826X	FWD ROT PITCH PULSE A	1 S/S
					2	BC3	2	V72K2827X	FWD ROT PITCH PULSE B	1 S/S
				$KZ^5_{4.3}$ 1/28	----		1	V72X2795X	FWD ROT PITCH PULSE LT	1 S/S
MANUAL MODE, ROTATION, YAW	C3	S9	VERN		1	AB3	1	V72K2853X	FWD RCS JETS VERN LT A	1 S/S
					2	BC3	2	V72K2854X	FWD RCS JETS VERN LT B	1 S/S
				$KZ^5_{4.3}$ 1/14	----		1	V72X2856X	FWD RCS JETS VERN LT LT	1 S/S
		S12	DISC RATE		1	AB3	1	V72K2832X	FWD ROT YAW DISC A	1 S/S
					2	BC3	2	V72K2833X	FWD ROT YAW DISC B	1 S/S
				$KZ^5_{4.3}$ 1/22	----		1	V72X2796X	FWD ROT YAW DISC LT	1 S/S
		S15	PULSE		1	AB3	1	V72K2836X	FWD ROT YAW PULSE A	1 S/S
					2	BC3	2	V72K2837X	FWD ROT YAW PULSE B	1 S/S
				$KZ^5_{4.3}$ 1/30	----		1	V72X2798X	FWD ROT YAW PULSE LT	1 S/S

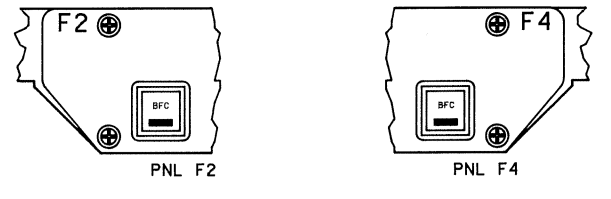

PNL F2

PNL F4

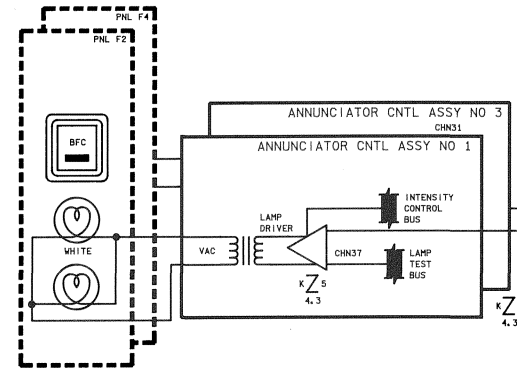

(TYPICAL 4 SWITCHES)

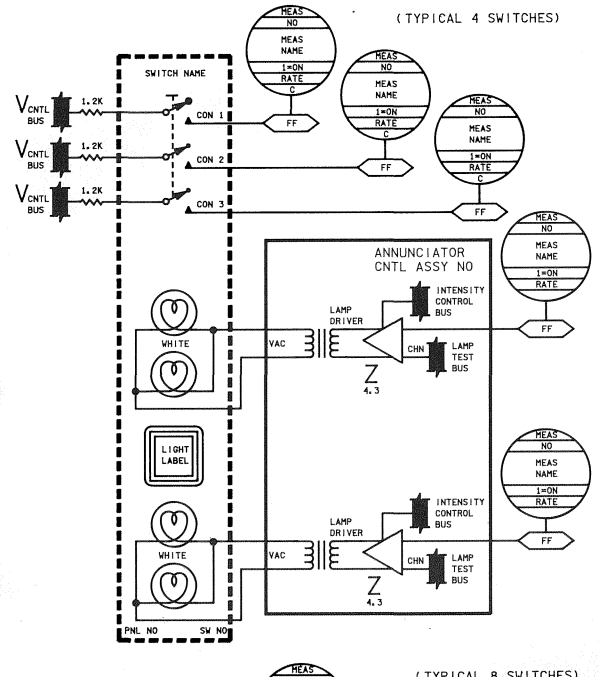

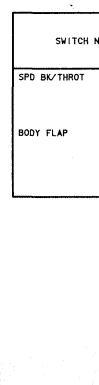

(TYPICAL 8 SWITCHES)

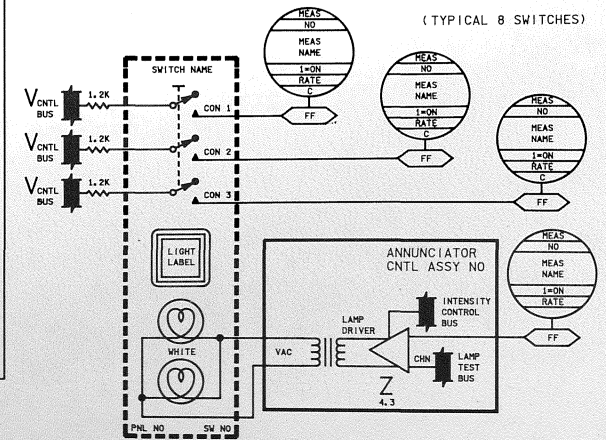

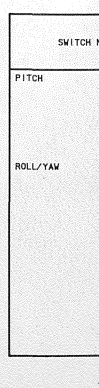

BASIC REV E-1

DATE: 10/23/91 | NAME: LAM | VERSION: INK 2

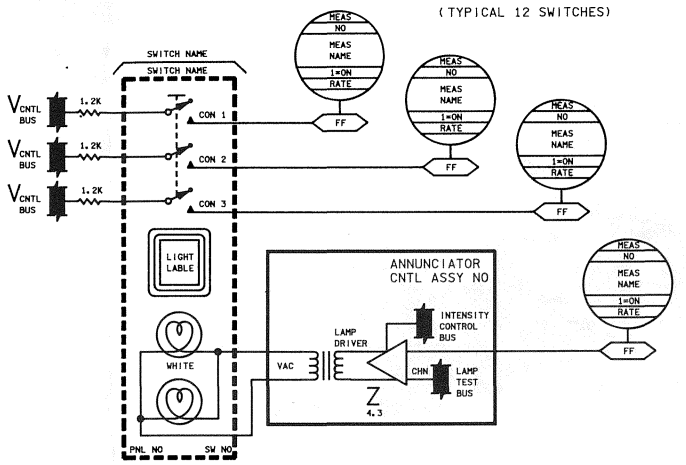

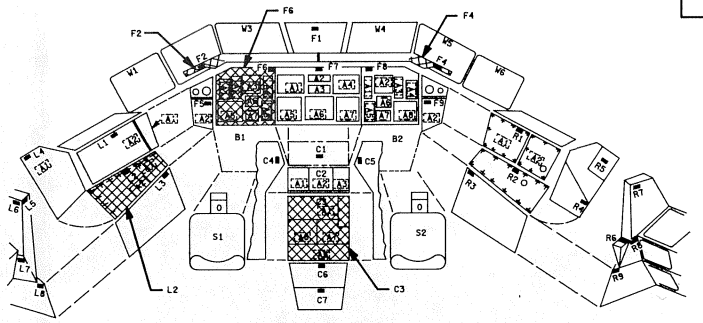

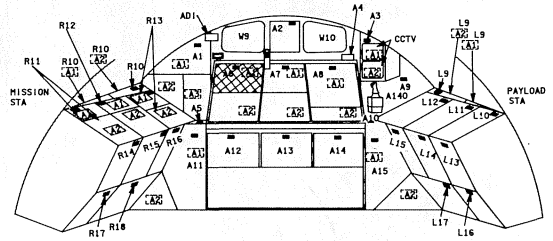

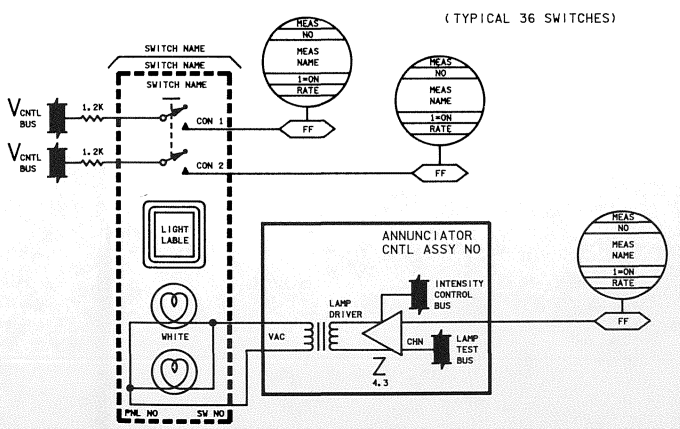

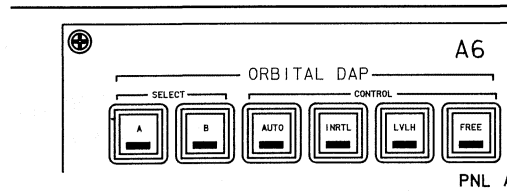

PNL A6

SWITCH NAME	PNL NO	SW NO	LIGHT LABEL	ANNUN CNTL Z 4.3	ASSY NO/ CHN	CON	$V_{CNTL\ BUS}$	FF MDM	MEAS NO	MEAS NAME	MAX DWNLINK RATE
ORBITAL DAP, SELECT	A6	S8	A			1	CA2	3	V72K6430X	AFT DAP SELECT A-A	12.5 S/S
						2	BC2	4	V72K6431X	AFT DAP SELECT A-B	12.5 S/S
						3	AB2	1	V72K6419X	AFT DAP SELECT A-C	12.5 S/S
							---	3	V72X6421X	AFT DAP SELECT A LT	-----
		S9	B	KZ2 4.3	4/1	1	CA2	3	V72K6432X	AFT DAP SELECT B-A	12.5 S/S
						2	BC2	4	V72K6433X	AFT DAP SELECT B-B	12.5 S/S
						3	AB2	1	V72K6420X	AFT DAP SELECT B-C	12.5 S/S
				KZ2 4.3	4/3		---	3	V72X6422X	AFT DAP SELECT B LT	-----
ORBITAL DAP, CONTROL	A6	S10	AUTO			1	CA2	3	V72K6490X	AFT DAP AUTO A	12.5 S/S
						2	BC2	4	V72K6491X	AFT DAP AUTO B	12.5 S/S
						3	AB2	1	V72K6492X	AFT DAP AUTO C	12.5 S/S
				KZ2 4.3	4/5		---	3	V72X6498X	AFT DAP AUTO LT	-----
		S11	INRTL			1	CA2	3	V72K6495X	AFT DAP MAN INRTL A	12.5 S/S
						2	BC2	4	V72K6496X	AFT DAP MAN INRTL B	12.5 S/S
						3	AB2	1	V72K6497X	AFT DAP MAN INRTL C	12.5 S/S
				KZ1 4.3	5/1		---	3	V72X6499X	AFT DAP MAN INRTL LT	-----
		S12	LVLH			1	CA2	3	V72K6517X	AFT DAP MAN LVLH A	1 S/S
						2	BC2	4	V72K6518X	AFT DAP MAN LVLH B	1 S/S
						3	AB2	1	V72K6415C	AFT DAP MAN LVLH C	1 S/S
							---	3	V72X6542X	AFT DAP MAN LVLH LT	-----
		S13	FREE	KZ1 4.3	5/3	1	CA2	3	V72K6412X	AFT DAP MAN FREE DFT A	1 S/S
						2	BC2	4	V72K6413X	AFT DAP MAN FREE DFT B	1 S/S
						3	AB2	1	V72K6414X	AFT DAP MAN FREE DFT C	1 S/S
				KZ1 4.3	5/5		---	3	V72X6417X	AFT DAP MAN FREE DFT LT	-----

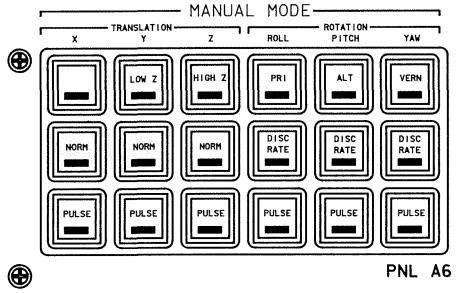

PNL A6

SWITCH NAME	PNL NO	SW NO	LIGHT LABEL	ANNUN CNTL Z 4.3	ASSY NO/ CHN	CON	$V_{CNTL\ BUS}$	FF MDM	MEAS NO	MEAS NAME	MAX DWNLINK RATE
MANUAL MODE, TRANSLATION, X	A6	S14	(BLANK)			1	CA2	3	-----	-----	-----
						2	BC2	4	-----	-----	-----
				KZ2 4.3	4/9		---	3	-----	-----	-----
		S20	NORM			1	CA2	3	V72K6510X	AFT TRANSL X NORM A	1 S/S
						2	BC2	4	V72K6511X	AFT TRANSL X NORM B	1 S/S
					4/17		---	3	V72X6540X	AFT TRANSL X NORM LT	-----
		S26	PULSE			1	CA2	3	V72K6513X	AFT TRANSL X PULSE A	1 S/S
						2	BC2	4	V72K6514X	AFT TRANSL X PULSE B	1 S/S
					4/25		---	3	V72X6541X	AFT TRANSL X PULSE LT	-----
MANUAL MODE, TRANSLATION, Y	A6	S15	LOW Z			1	CA2	3	V72K6527X	AFT TRANSL LOW Z A	1 S/S
						2	BC2	4	V72K6528X	AFT TRANSL LOW Z B	1 S/S
					4/11			3	V72X6545X	AFT TRANSL LOW Z LT	-----
		S21	NORM			1	CA2	3	V72K6520X	AFT TRANSL Y NORM A	1 S/S
						2	BC2	4	V72K6521X	AFT TRANSL Y NORM B	1 S/S
					4/19		---	3	V72X6543X	AFT TRANSL Y NORM LT	-----
		S27	PULSE			1	CA2	3	V72K6523X	AFT TRANSL Y PULSE A	1 S/S
						2	BC2	4	V72K6524X	AFT TRANSL Y PULSE B	1 S/S
					4/27		---	3	V72X6544X	AFT TRANSL Y PULSE LT	-----
MANUAL MODE, TRANSLATION, Z	A6	S16	HIGH Z			1	CA2	3	V72K6537X	AFT TRANSL Z HIGH A	1 S/S
						2	BC2	4	V72K6538X	AFT TRANSL Z HIGH B	1 S/S
					4/13		---	3	V72X6548X	AFT TRANSL Z HIGH LT	-----
		S22	NORM			1	CA2	3	V72K6530X	AFT TRANSL Z NORM A	1 S/S
						2	BC2	4	V72K6531X	AFT TRANSL Z NORM B	1 S/S
					4/21		---	3	V72X6546X	AFT TRANSL Z NORM LT	-----
		S28	PULSE			1	CA2	3	V72K6533X	AFT TRANSL Z PULSE A	1 S/S
						2	BC2	4	V72K6534X	AFT TRANSL Z PULSE B	1 S/S
					4/29		---	3	V72X6547X	AFT TRANSL Z PULSE LT	-----
MANUAL MODE, ROTATION, ROLL	A6	S17	PRI	KZ2 4.3		1	CA2	3	V72K6505X	AFT RCS JETS NORM A	1 S/S
						2	BC2	4	V72K6506X	AFT RCS JETS NORM B	1 S/S
				KZ1 4.3	5/9		---	3	V72X6502X	AFT RCS JETS NORM LT	-----
		S23	DISC RATE			1	CA2	3	V72K6440X	AFT ROT ROLL DISC A	1 S/S
						2	BC2	4	V72K6441X	AFT ROT ROLL DISC B	1 S/S
					5/17		---	3	V72X6450X	AFT ROT ROLL DISC LT	-----
		S29	PULSE			1	CA2	3	V72K6448X	AFT ROT ROLL PULSE A	1 S/S
						2	BC2	4	V72K6449X	AFT ROT ROLL PULSE B	1 S/S
					5/25		---	3	V72X6452X	AFT ROT ROLL PULSE LT	-----
MANUAL MODE, ROTATION, PITCH	A6	S18	ALT			1	CA2	3	V72K6410X	AFT ALT PRCS MODE A	1 S/S
						2	BC2	4	V72K6411X	AFT ALT PRCS MODE B	1 S/S
					5/11		---	3	V72X6416X	AFT ALT PRCS MODE LT	-----
		S24	DISC RATE			1	CA2	3	V72K6460X	AFT ROT PITCH DISC A	1 S/S
						2	BC2	4	V72K6461X	AFT ROT PITCH DISC B	1 S/S
					5/19		---	3	V72X6470X	AFT ROT PITCH DISC LT	-----
		S30	PULSE			1	CA2	3	V72K6468X	AFT ROT PITCH PULSE A	1 S/S
						2	BC2	4	V72K6469X	AFT ROT PITCH PULSE B	1 S/S
					5/27		---	3	V72X6472X	AFT ROT PITCH PULSE LT	-----
MANUAL MODE, ROTATION, YAW	A6	S19	VERN			1	CA2	3	V72K6507X	AFT RCS JETS VERN A	1 S/S
						2	BC2	4	V72K6508X	AFT RCS JETS VERN B	1 S/S
					5/13		---	3	V72X6503X	AFT RCS JETS VERN LT	-----
		S25	DISC RATE			1	CA2	3	V72K6480X	AFT ROT YAW DISC A	1 S/S
						2	BC2	4	V72K6481X	AFT ROT YAW DISC B	1 S/S
					5/21		---	3	V72X6473X	AFT ROT YAW DISC LT	-----
		S31	PULSE			1	CA2	3	V72K6488X	AFT ROT YAW PULSE A	1 S/S
						2	BC2	4	V72K6489X	AFT ROT YAW PULSE B	1 S/S
				KZ1 4.3	5/29		---	3	V72X6475X	AFT ROT YAW PULSE LT	-----

BASIC REV E-1

DATE= 09/07/90	NAME= VSH	VERSION= INK= 5
DATE= 09/07/90	NAME= VSH	VERSION= BPT= 8
DATE= 09/11/90	NAME= MDU	VERSION= INK= 1

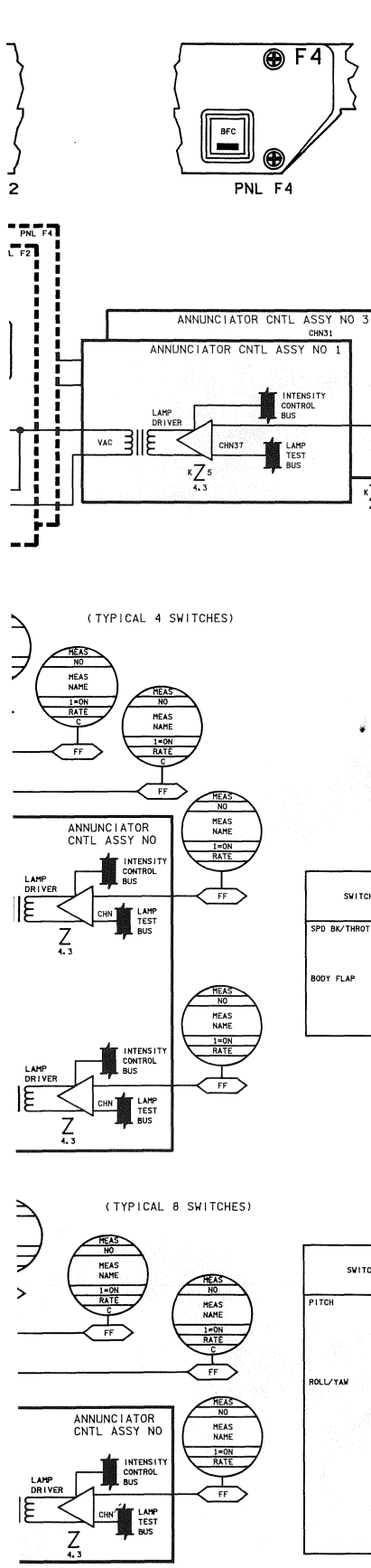

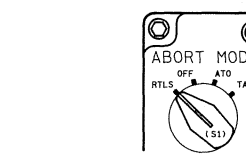

SWITCH NAME	PNL NO	SW NO	LIGHT LABEL	ANNUN CNTL Z 4,3	ANNUN CNTL ASSY NO/ CHN	CON	V CNTL BUS	FF MOM	MEAS NO	MEAS NAME	MAX DWNLINK RATE
SPD BK/THROT	F2	S8	AUTO/MAN			1	AB1	1	V72K1570X	LH SPD BK/THROT A/M A	1 S/S
						2	BC1	2	V72K1571X	LH SPD BK/THROT A/M B	1 S/S
						3	CA1	3	V72K1572X	LH SPD BK/THROT A/M C	1 S/S
				K Z 5 4,3	1/25 1/27		---	1	V72X5136X	LH SPD BK AUTO LT	1 S/S
							---	2	V72X5137X	LH SPD BK MAN LT	1 S/S
BODY FLAP	F2	S9	AUTO/MAN			1	AB1	1	V72K4993X	LH BODY FLAP A/M A	1 S/S
						2	BC1	2	V72K4994X	LH BODY FLAP A/M B	1 S/S
						3	CA1	3	V72K4995X	LH BODY FLAP A/M C	1 S/S
				K Z 5 4,3	1/29 1/11		---	1	V72X4996X	LH BODY FLAP AUTO LT	1 S/S
							---	2	V72X4997X	LH BODY FLAP MAN LT	1 S/S

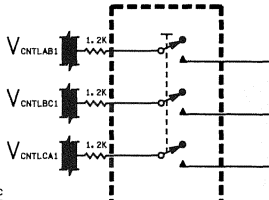

SWITCH NAME	PNL NO	SW NO	LIGHT LABEL	ANNUN CNTL Z 4,3	ANNUN CNTL ASSY NO/ CHN	CON	V CNTL BUS	FF MOM	MEAS NO	MEAS NAME	MAX DWNLINK RATE
PITCH	F2	S2	AUTO			1	AB1	1	V72K5251X	LH PITCH AUTO MODE A	1 S/S
						2	BC1	2	V72K5252X	LH PITCH AUTO MODE B	1 S/S
						3	CA1	3	V72K5253X	LH PITCH AUTO MODE C	1 S/S
							---	1	V72X5240X	LH PITCH AUTO MODE LT	1 S/S
		S3	CSS	K Z 5 4,3	1/13	1	AB1	1	V72K5256X	LH PITCH CSS MODE A	1 S/S
						2	BC1	2	V72K5257X	LH PITCH CSS MODE B	1 S/S
						3	CA1	3	V72K5258X	LH PITCH CSS MODE C	1 S/S
					1/15		---	2	V72X5241X	LH PITCH CSS MODE LT	1 S/S
ROLL/YAW	F2	S5	AUTO			1	AB1	1	V72K5265X	LH R/Y AUTO MODE A	1 S/S
						2	BC1	2	V72K5266X	LH R/Y AUTO MODE B	1 S/S
						3	CA1	3	V72K5267X	LH R/Y AUTO MODE C	1 S/S
					1/19		---	1	V72X5243X	LH R/Y AUTO MODE LT	1 S/S
		S6	CSS			1	AB1	1	V72K5270X	LH R/Y CSS MODE A	1 S/S
						2	BC1	2	V72K5271X	LH R/Y CSS MODE B	1 S/S
						3	CA1	3	V72K5272X	LH R/Y CSS MODE C	1 S/S
					1/21		---	2	V72X5245X	LH R/Y CSS MODE LT	1 S/S

SWITCH NAME	PNL NO	SW NO	LIGHT LABEL	ANNUN CNTL Z 4,3	ASSY NO/ CHN	CON	V CNTL BUS	FF MOM	MEAS NO	MEAS NAME	MAX DWNLINK RATE
SPD BK/THROT	F4	S8	AUTO/MAN			1	BC2	2	V72K1600X	RH SPD BK/THROT A/M A	1 S/S
						2	CA2	3	V72K1601X	RH SPD BK/THROT A/M B	1 S/S
						3	BC3	4	V72K1602X	RH SPD BK/THROT A/M C	1 S/S
				K Z 4 4,3	2/26 2/28		---	3	V72X5134X	RH SPD BK AUTO LT	1 S/S
							---	4	V72X5135X	RH SPD BK MAN LT	1 S/S
BODY FLAP	F4	S9	AUTO/MAN			1	BC2	2	V72K4893X	RH BODY FLAP A/M A	1 S/S
						2	CA2	3	V72K4894X	RH BODY FLAP A/M B	1 S/S
						3	BC3	4	V72K4895X	RH BODY FLAP A/M C	1 S/S
				K Z 4 4,3	2/30 2/34		---	3	V72X4896X	RH BODY FLAP AUTO LT	1 S/S
							---	4	V72X4897X	RH BODY FLAP MAN LT	1 S/S

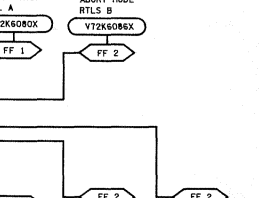

SWITCH NAME	PNL NO	SW NO	LIGHT LABEL	ANNUN CNTL Z 4,3	ASSY NO/ CHN	CON	V CNTL BUS	FF MOM	MEAS NO	MEAS NAME	MAX DWNLINK RATE
PITCH	F4	S2	AUTO			1	BC2	2	V72K5151X	RH PITCH AUTO MODE A	1 S/S
						2	CA2	3	V72K5152X	RH PITCH AUTO MODE B	1 S/S
						3	BC3	4	V72K5153X	RH PITCH AUTO MODE C	1 S/S
							---	3	V72X5140X	RH PITCH AUTO MODE LT	1 S/S
		S3	CSS	K Z 4 4,3	2/14	1	BC2	2	V72K5156X	RH PITCH CSS MODE A	1 S/S
						2	CA2	3	V72K5157X	RH PITCH CSS MODE B	1 S/S
						3	BC3	4	V72K5158X	RH PITCH CSS MODE C	1 S/S
					2/16		---	4	V72X5141X	RH PITCH CSS MODE LT	1 S/S
ROLL/YAW	F4	S5	AUTO			1	BC2	2	V72K5165X	RH R/Y AUTO MODE A	1 S/S
						2	CA2	3	V72K5166X	RH R/Y AUTO MODE B	1 S/S
						3	BC3	4	V72K5167X	RH R/Y AUTO MODE C	1 S/S
					2/20		---	3	V72X5143X	RH R/Y AUTO MODE LT	1 S/S
		S6	CSS			1	BC2	2	V72K5170X	RH R/Y CSS MODE A	1 S/S
						2	CA2	3	V72K5171X	RH R/Y CSS MODE B	1 S/S
						3	BC3	4	V72K5172X	RH R/Y CSS MODE C	1 S/S
					2/22		---	4	V72X5145X	RH R/Y CSS MODE LT	1 S/S

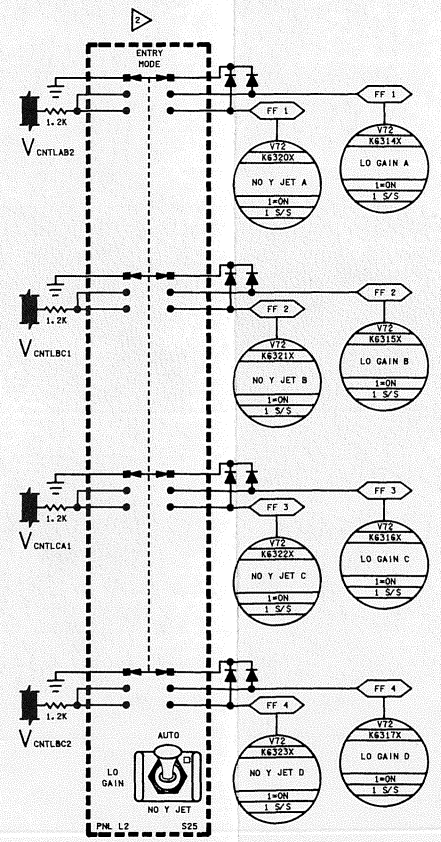

▷ ENTRY MODE SWITCH SELECTION FILTER PROCESSING

THIS MATRIX SHOWS RM OUTPUT FOR THE VARIOUS STATE OF CONTACTS OF THE ENTRY MODE SWITCH. IF THE ENTRY SW OVERRIDE SIGNAL IS = +1, LITEM 42, AUTO SEL ON SPEC 51 OVERRIDE DISPLAY1, THE OUTPUT IS THE SAME AS IF THE CONTACT STATE WERE 0/0.

NO OF AVAILABLE CONTACTS ENERGIZED (+1)	LOW GAIN 0	LOW GAIN 1	LOW GAIN 2	LOW GAIN 3	LOW GAIN 4
0	SEL L GAIN = 0* SEL NO Y JET = 0 ENT SW FAIL = 0	SEL L GAIN = 0* SEL NO Y JET = 0 ENT SW FAIL = 0	SEL L GAIN = 1 SEL NO Y JET = 0 ENT SW FAIL = 1	SEL L GAIN = 1 SEL NO Y JET = 0 ENT SW FAIL = 1	SEL L GAIN = 1 SEL NO Y JET = 0 ENT SW FAIL = 1
1	SEL L GAIN = 0* SEL NO Y JET = 0 ENT SW FAIL = 0	SEL L GAIN = 0 SEL NO Y JET = 0 ENT SW FAIL = 1	SEL L GAIN = 0 SEL NO Y JET = 0 ENT SW FAIL = 1	SEL L GAIN = 1 SEL NO Y JET = 0 ENT SW FAIL = 1	SEL L GAIN = 1 SEL NO Y JET = 0 ENT SW FAIL = 1
2	SEL L GAIN = 0 SEL NO Y JET = 1 ENT SW FAIL = 0	SEL L GAIN = 0 SEL NO Y JET = 0 ENT SW FAIL = 1	SEL L GAIN = 0 SEL NO Y JET = 0 ENT SW FAIL = 1	SEL L GAIN = 1 SEL NO Y JET = 0 ENT SW FAIL = 1	SEL L GAIN = 1 SEL NO Y JET = 0 ENT SW FAIL = 1
3	SEL L GAIN = 0 SEL NO Y JET = 1 ENT SW FAIL = 0	SEL L GAIN = 0 SEL NO Y JET = 1 ENT SW FAIL = 1	SEL L GAIN = 0 SEL NO Y JET = 1 ENT SW FAIL = 1	SEL L GAIN = 0 SEL NO Y JET = 0 ENT SW FAIL = 1	SEL L GAIN = 1 SEL NO Y JET = 0 ENT SW FAIL = 1
4	SEL L GAIN = 0 SEL NO Y JET = 1 ENT SW FAIL = 0	SEL L GAIN = 0 SEL NO Y JET = 1 ENT SW FAIL = 1	SEL L GAIN = 0 SEL NO Y JET = 1 ENT SW FAIL = 1	SEL L GAIN = 0 SEL NO Y JET = 1 ENT SW FAIL = 1	SEL L GAIN = 0 SEL NO Y JET = 0 ENT SW FAIL = 1

*FDIR SHALL OPERATE IN THIS STATE IF SEVEN OR MORE CONTACTS ARE AVAILABLE

- FDIR FOR FOUR-CONTACT SWITCHES SHALL CONSIDER ALL THE CONTACTS AVAILABLE FOR FDIR TO BE A REDUNDANT SET. FDIR SHALL TERMINATE IF LESS THAN SEVEN OF THE EIGHT CONTACTS ARE AVAILABLE, OR IF MORE THAN ONE CONTACT IS IN THE (+1) STATE. WHEN FDIR RUNS, A SINGLE CONTACT IN THE (+1) STATE WHILE ALL OTHER CONTACTS ARE IN THE ZERO STATE SHALL BE DECLARED FAILED IF THE CONDITION PERSISTS FOR THREE CONSECUTIVE CYCLES
- GAX MSG *051 RL MODE SW* WILL APPEAR WHEN ENT SW FAIL = 1

NOTES: ▷ THE DATA IN THE TABLES REFER TO THE ASSOCIATED TYPICAL SWITCH CIRCUIT

10 FCS SW 2

SIGNATURE		DATE	NATIONAL AERONAUTICS AND SPACE ADMINISTRATION LYNDON B. JOHNSON SPACE CENTER HOUSTON, TEXAS
DSGN	MIKE BECKER	4-20-79	
DR			FCS MODE SWITCHES OI 20 AND SUBS
ENGR	B.J. SCHOENBAUER		
ENGR	G.T. Schonberger	9/12/90	
APP	Jonathan H. Ellerbee	9/12/90	
APP	Robert A. Kennamer	9/12/90	SPACE SHUTTLE
OMNIPLAN	S.K. Kimball	9-12-90	ALL
LTR	E	PCN	104.5 X 34

DWG NO 9.10

PAGE SHEET 2 OF 2

BASIC REV E

(TYPICAL 12 SWITCHES)

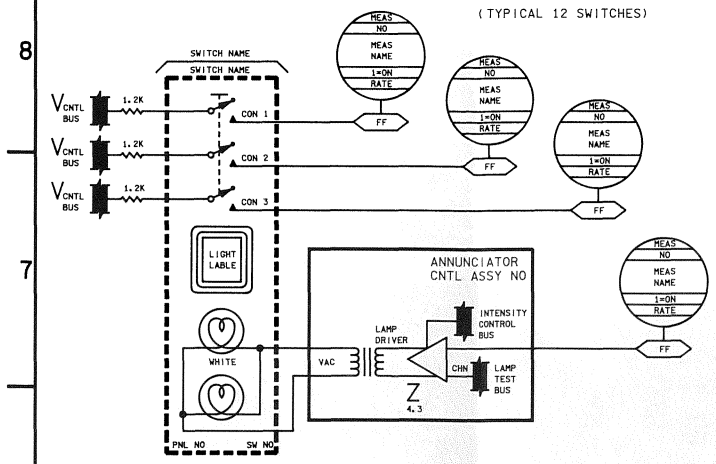

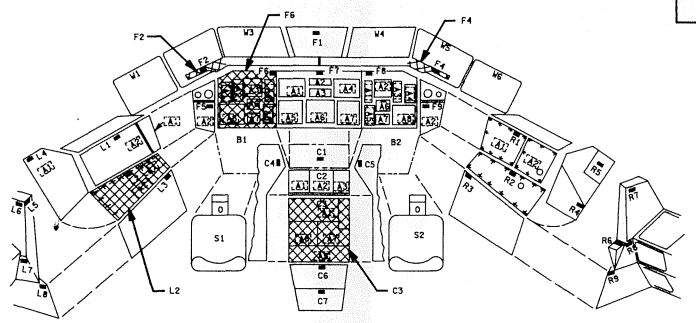

FLIGHT STATION

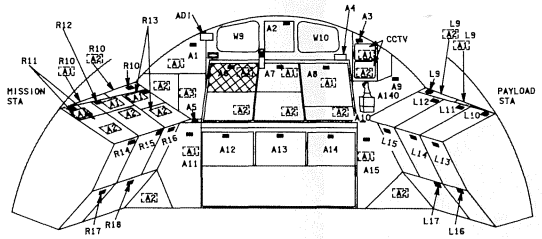

AFT STATION

(TYPICAL 36 SWITCHES)

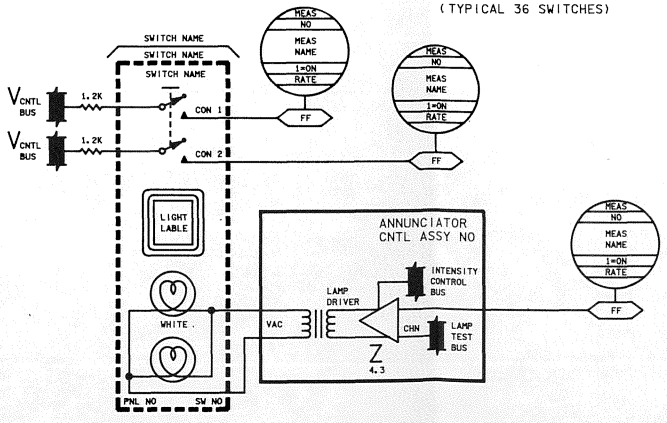

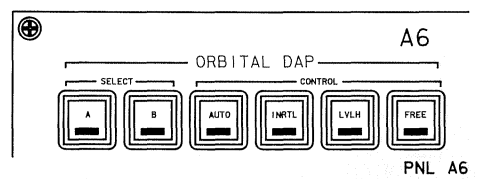

PNL A6

SWITCH NAME	PNL NO	SW NO	LIGHT LABEL	ANNUN CNTL Z 4.3	ANNUN CNTL ASSY NO/ CHN	CON	V_{CNTL} BUS	FF MDM	MEAS NO	MEAS NAME	MAX DWNLINK RATE
ORBITAL DAP, SELECT	A6	S8	A			1	CA2	3	V72K6430X	AFT DAP SELECT A-A	12.5 S/S
						2	BC2	4	V72K6431X	AFT DAP SELECT A-B	12.5 S/S
						3	AB2	1	V72K6419X	AFT DAP SELECT A-C	12.5 S/S
		S9	B	KZ_2 4.3	4/1	---		3	V72K6421X	AFT DAP SELECT A-LT	-----
						1	CA2	3	V72K6432X	AFT DAP SELECT B-A	12.5 S/S
						2	BC2	4	V72K6433X	AFT DAP SELECT B-B	12.5 S/S
						3	AB2	1	V72K6420X	AFT DAP SELECT B-C	12.5 S/S
						---		3	V72K6422X	AFT DAP SELECT B LT	-----
ORBITAL DAP, CONTROL	A6	S10	AUTO	KZ_2 4.3	4/3	1	CA2	3	V72K6490X	AFT DAP AUTO A	12.5 S/S
						2	BC2	4	V72K6491X	AFT DAP AUTO B	12.5 S/S
						3	AB2	1	V72K6492X	AFT DAP AUTO C	12.5 S/S
						---		3	V72K6498X	AFT DAP AUTO LT	-----
		S11	INRTL	KZ_2 4.3	4/5	1	CA2	3	V72K6495X	AFT DAP MAN INRTL A	12.5 S/S
						2	BC2	4	V72K6496X	AFT DAP MAN INRTL B	12.5 S/S
						3	AB2	1	V72K6497X	AFT DAP MAN INRTL C	12.5 S/S
						---		3	V72K6498X	AFT DAP MAN INRTL LT	-----
		S12	LVLH	KZ_1 4.3	5/1	1	CA2	3	V72K6517X	AFT DAP MAN LVLH A	1 S/S
						2	BC2	4	V72K6518X	AFT DAP MAN LVLH B	1 S/S
						3	AB2	1	V72K6515X	AFT DAP MAN LVLH C	1 S/S
						---		3	V72K6542X	AFT DAP MAN LVLH LT	-----
		S13	FREE	KZ_1 4.3	5/3	1	CA2	3	V72K6412X	AFT DAP MAN FREE DFT A	1 S/S
						2	BC2	4	V72K6413X	AFT DAP MAN FREE DFT B	1 S/S
						3	AB2	1	V72K6414X	AFT DAP MAN FREE DFT C	1 S/S
				KZ_1 4.3	5/5	---		3	V72K6417X	AFT DAP MAN FREE DFT LT	-----

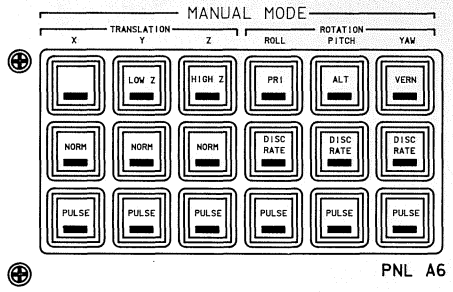

PNL A6

SWITCH NAME	PNL NO	SW NO	LIGHT LABEL	ANNUN CNTL Z 4.3	ANNUN CNTL ASSY NO/ CHN	CON	V_{CNTL} BUS	FF MDM	MEAS NO	MEAS NAME	MAX DWNLINK RATE
MANUAL MODE, TRANSLATION, X	A6	S14	(BLANK)			1	CA2	3	-----	-----	-----
						2	BC2	4	-----	-----	-----
						---		3	-----	-----	-----
		S20	NORM	KZ_1 4.3	4/9	1	CA2	3	V72K6510X	AFT TRANSL X NORM A	1 S/S
						2	BC2	4	V72K6511X	AFT TRANSL X NORM B	1 S/S
					4/17	---		3	V72K6540X	AFT TRANSL X NORM LT	-----
		S26	PULSE			1	CA2	3	V72K6513X	AFT TRANSL X PULSE A	1 S/S
						2	BC2	4	V72K6514X	AFT TRANSL X PULSE B	1 S/S
						---		3	V72K6541X	AFT TRANSL X PULSE LT	-----
MANUAL MODE, TRANSLATION, Y	A6	S15	LOW Z		4/25	1	CA2	3	V72K6527X	AFT TRANSL LOW Z A	1 S/S
						2	BC2	4	V72K6528X	AFT TRANSL LOW Z B	1 S/S
						---		3	V72K6545X	AFT TRANSL LOW Z LT	-----
		S21	NORM		4/11	1	CA2	3	V72K6520X	AFT TRANSL Y NORM A	1 S/S
						2	BC2	4	V72K6521X	AFT TRANSL Y NORM B	1 S/S
						---		3	V72K6543X	AFT TRANSL Y NORM LT	-----
		S27	PULSE		4/19	1	CA2	3	V72K6523X	AFT TRANSL Y PULSE A	1 S/S
						2	BC2	4	V72K6524X	AFT TRANSL Y PULSE B	1 S/S
						---		3	V72K6544X	AFT TRANSL Y PULSE LT	-----
MANUAL MODE, TRANSLATION, Z	A6	S16	HIGH Z		4/27	1	CA2	3	V72K6537X	AFT TRANSL Z HIGH A	1 S/S
						2	BC2	4	V72K6538X	AFT TRANSL Z HIGH B	1 S/S
						---		3	V72K6548X	AFT TRANSL Z HIGH LT	-----
		S22	NORM		4/13	1	CA2	3	V72K6530X	AFT TRANSL Z NORM A	1 S/S
						2	BC2	4	V72K6531X	AFT TRANSL Z NORM B	1 S/S
						---		3	V72K6546X	AFT TRANSL Z NORM LT	-----
		S28	PULSE		4/21	1	CA2	3	V72K6533X	AFT TRANSL Z PULSE A	1 S/S
						2	BC2	4	V72K6534X	AFT TRANSL Z PULSE B	1 S/S
						---		3	V72K6547X	AFT TRANSL Z PULSE LT	-----
MANUAL MODE, ROTATION, ROLL	A6	S17	PRI	KZ_1 4.3	4/29	1	CA2	3	V72K6505X	AFT RCS JETS NORM A	1 S/S
						2	BC2	4	V72K6506X	AFT RCS JETS NORM B	1 S/S
						---		3	V72K6502X	AFT RCS JETS NORM LT	-----
		S23	DISC RATE	KZ_1 4.3	5/9	1	CA2	3	V72K6440X	AFT ROT ROLL DISC A	1 S/S
						2	BC2	4	V72K6441X	AFT ROT ROLL DISC B	1 S/S
						---		3	V72K6450X	AFT ROT ROLL DISC LT	-----
		S29	PULSE		5/17	1	CA2	3	V72K6448X	AFT ROT ROLL PULSE A	1 S/S
						2	BC2	4	V72K6449X	AFT ROT ROLL PULSE B	1 S/S
						---		3	V72K6452X	AFT ROT ROLL PULSE LT	-----
MANUAL MODE, ROTATION, PITCH	A6	S18	ALT		5/25	1	CA2	3	V72K6410X	AFT ALT PRCS MODE A	1 S/S
						2	BC2	4	V72K6411X	AFT ALT PRCS MODE B	1 S/S
						---		3	V72K6416X	AFT ALT PRCS MODE LT	-----
		S24	DISC RATE		5/11	1	CA2	3	V72K6460X	AFT ROT PITCH DISC A	1 S/S
						2	BC2	4	V72K6461X	AFT ROT PITCH DISC B	1 S/S
						---		3	V72K6470X	AFT ROT PITCH DISC LT	-----
		S30	PULSE		5/19	1	CA2	3	V72K6468X	AFT ROT PITCH PULSE A	1 S/S
						2	BC2	4	V72K6469X	AFT ROT PITCH PULSE B	1 S/S
						---		3	V72K6472X	AFT ROT PITCH PULSE LT	-----
MANUAL MODE, ROTATION, YAW	A6	S19	VERN		5/27	1	CA2	3	V72K6507X	AFT RCS JETS VERN A	1 S/S
						2	BC2	4	V72K6508X	AFT RCS JETS VERN B	1 S/S
						---		3	V72K6503X	AFT RCS JETS VERN LT	-----
		S25	DISC RATE		5/13	1	CA2	3	V72K6480X	AFT ROT YAW DISC A	1 S/S
						2	BC2	4	V72K6481X	AFT ROT YAW DISC B	1 S/S
						---		3	V72K6473X	AFT ROT YAW DISC LT	-----
		S31	PULSE		5/21	1	CA2	3	V72K6488X	AFT ROT YAW PULSE A	1 S/S
						2	BC2	4	V72K6489X	AFT ROT YAW PULSE B	1 S/S
				KZ_1 4.3	5/29	---		3	V72K6475X	AFT ROT YAW PULSE LT	-----

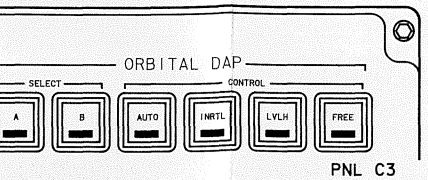

PNL C3

SWITCH NAME	PNL NO	SW NO	LIGHT LABEL	ANNUN CNTL Z 4.3	ANNUN CNTL ASSY NO/ CHN	CON	V_{CNTL} BUS	FF MDM	MEAS NO	MEAS NAME	MAX DWNLINK RATE
ORBITAL DAP, SELECT	C3	S1	A			1	AB3	1	V72K2801X	FWD DAP SELECT A-A	12.5 S/S
						2	BC3	2	V72K2802X	FWD DAP SELECT A-B	12.5 S/S
						3	CA3	3	V72K2805X	FWD DAP SELECT A-C	12.5 S/S
		S2	B	KZ_3 4.3	3/2	---		1	V72K2807X	FWD DAP SELECT A LT	5 S/S
						1	AB3	1	V72K2803X	FWD DAP SELECT B-A	12.5 S/S
						2	BC3	2	V72K2804X	FWD DAP SELECT B-B	12.5 S/S
						3	CA3	3	V72K2806X	FWD DAP SELECT B-C	12.5 S/S
						---		1	V72K2808X	FWD DAP SELECT B LT	1 S/S
ORBITAL DAP, CONTROL	C3	S3	AUTO	KZ_3 4.3	3/4	1	AB3	1	V72K2840X	FWD DAP AUTO A	12.5 S/S
						2	BC3	2	V72K2841X	FWD DAP AUTO B	12.5 S/S
						3	CA3	3	V72K2842X	FWD DAP AUTO C	12.5 S/S
						---		1	V72X2850X	FWD DAP AUTO LT	5 S/S
		S4	INRTL	KZ_3 4.3	3/6	1	AB3	1	V72K2845X	FWD DAP MAN INRTL A	12.5 S/S
						2	BC3	2	V72K2846X	FWD DAP MAN INRTL B	12.5 S/S
						3	CA3	3	V72K2847X	FWD DAP MAN INRTL C	12.5 S/S
						---		1	V72X2849X	FWD DAP MAN INRTL LT	1 S/S
		S5	LVLH	KZ_5 4.3	3/2	1	AB3	1	V72K2864X	FWD RCS MAN LVLH A	1 S/S
						2	BC3	2	V72K2865X	FWD RCS MAN LVLH B	1 S/S
						3	CA3	3	V72K2895X	FWD RCS MAN LVLH C	1 S/S
						---		1	V72X2868X	FWD RCS MAN LVLH LT	5 S/S
		S6	FREE	KZ_5 4.3	1/2	1	AB3	1	V72K2892X	FWD RCS MAN FREE DFT A	1 S/S
						2	BC3	2	V72K2893X	FWD RCS MAN FREE DFT B	1 S/S
						3	CA3	3	V72K2894X	FWD RCS MAN FREE DFT C	1 S/S
				KZ_5 4.3	1/2	---		1	V72X2897X	FWD RCS MAN FREE DFT LT	1 S/S

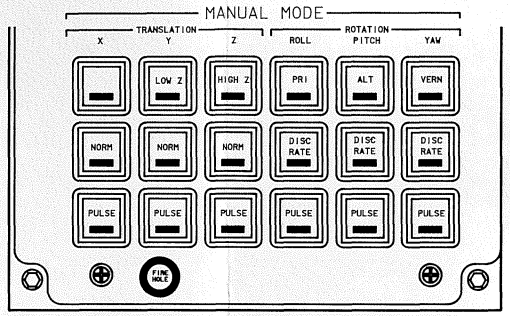

PNL C3

SWITCH NAME	PNL NO	SW NO	LIGHT LABEL	ANNUN CNTL Z 4.3	ANNUN CNTL ASSY NO/ CHN	CON	V_{CNTL} BUS	FF MDM	MEAS NO	MEAS NAME	MAX DWNLINK RATE
MANUAL MODE, TRANSLATION, X	C3	S16	(BLANK)			1	AB3	1	-----	-----	-----
						2	BC3	2	-----	-----	-----
						---		1	-----	-----	-----
		S19	NORM	KZ_3 4.3	3/10	1	AB3	1	V72K2860X	FWD TRANSL X NORM A	1 S/S
						2	BC3	2	V72K2861X	FWD TRANSL X NORM B	1 S/S
					3/18	---		1	V72K2866X	FWD TRANSL X NORM LT	1 S/S
		S22	PULSE			1	AB3	1	V72K2862X	FWD TRANSL X PULSE A	1 S/S
						2	BC3	2	V72K2863X	FWD TRANSL X PULSE B	1 S/S
						---		1	V72K2867X	FWD TRANSL X PULSE LT	1 S/S
MANUAL MODE, TRANSLATION, Y	C3	S17	LOW Z		3/26	1	AB3	1	V72K2874X	FWD TRANSL LOW Z A	1 S/S
						2	BC3	2	V72K2875X	FWD TRANSL LOW Z B	1 S/S
						---		1	V72X2878X	FWD TRANSL LOW Z LT	1 S/S
		S20	NORM		3/12	1	AB3	1	V72K2870X	FWD TRANSL Y NORM A	1 S/S
						2	BC3	2	V72K2871X	FWD TRANSL Y NORM B	1 S/S
						---		1	V72X2876X	FWD TRANSL Y NORM LT	1 S/S
		S23	PULSE		3/20	1	AB3	1	V72K2872X	FWD TRANSL Y PULSE A	1 S/S
						2	BC3	2	V72K2873X	FWD TRANSL Y PULSE B	1 S/S
						---		1	V72X2877X	FWD TRANSL Y PULSE LT	1 S/S
MANUAL MODE, TRANSLATION, Z	C3	S18	HIGH Z		3/28	1	AB3	1	V72K2884X	FWD TRANSL Z HIGH A	1 S/S
						2	BC3	2	V72K2885X	FWD TRANSL Z HIGH B	1 S/S
						---		1	V72X2888X	FWD TRANSL Z HIGH LT	1 S/S
		S21	NORM		3/14	1	AB3	1	V72K2880X	FWD TRANSL Z NORM A	1 S/S
						2	BC3	2	V72K2881X	FWD TRANSL Z NORM B	1 S/S
						---		1	V72X2886X	FWD TRANSL Z NORM LT	1 S/S
		S24	PULSE		3/22	1	AB3	1	V72K2882X	FWD TRANSL Z PULSE A	1 S/S
						2	BC3	2	V72K2883X	FWD TRANSL Z PULSE B	1 S/S
					3/30	---		1	V72X2887X	FWD TRANSL Z PULSE LT	1 S/S
MANUAL MODE, ROTATION, ROLL	C3	S7	PRI			1	AB3	1	V72K2851X	FWD RCS JETS NORM A	1 S/S
						2	BC3	2	V72K2852X	FWD RCS JETS NORM B	1 S/S
					1/10	---		1	V72X2855X	FWD RCS JETS NORM LT	1 S/S
		S10	DISC RATE			1	AB3	1	V72K2812X	FWD ROT ROLL DISC A	1 S/S
						2	BC3	2	V72K2813X	FWD ROT ROLL DISC B	1 S/S
						---		1	V72X2790X	FWD ROT ROLL DISC LT	1 S/S
		S13	PULSE		1/18	1	AB3	1	V72K2816X	FWD ROT ROLL PULSE A	1 S/S
						2	BC3	2	V72K2817X	FWD ROT ROLL PULSE B	1 S/S
						---		1	V72X2792X	FWD ROT ROLL PULSE LT	1 S/S
MANUAL MODE, ROTATION, PITCH	C3	S8	ALT	KZ_5 4.3	1/26	1	AB3	1	V72K2890X	FWD ALT PRCS MODE A	1 S/S
						2	BC3	2	V72K2891X	FWD ALT PRCS MODE B	1 S/S
					1/12	---		1	V72X2896X	FWD ALT PRCS MODE LT	1 S/S
		S11	DISC RATE			1	AB3	1	V72K2826X	FWD ROT PITCH DISC A	1 S/S
						2	BC3	2	V72K2823X	FWD ROT PITCH DISC B	1 S/S
						---		1	V72X2793X	FWD ROT PITCH DISC LT	1 S/S
		S14	PULSE		1/20	1	AB3	1	V72K2826X	FWD ROT PITCH PULSE A	1 S/S
						2	BC3	2	V72K2827X	FWD ROT PITCH PULSE B	1 S/S
						---		1	V72X2795X	FWD ROT PITCH PULSE LT	1 S/S
					1/28	1	AB3	1	V72K2853X	FWD RCS JETS VERN LT A	1 S/S
						2	BC3	2	V72K2854X	FWD RCS JETS VERN LT B	1 S/S
						---		1	V72K2856X	FWD RCS JETS VERN LT LT	1 S/S
MANUAL MODE, ROTATION, YAW	C3	S9	VERN		1/14	1	AB3	1	V72K2832X	FWD ROT YAW DISC A	1 S/S
						2	BC3	2	V72K2833X	FWD ROT YAW DISC B	1 S/S
		S12	DISC RATE			---		1	V72X2796X	FWD ROT YAW DISC LT	1 S/S
					1/22	1	AB3	1	V72K2836X	FWD ROT YAW PULSE A	1 S/S
		S15	PULSE			2	BC3	2	V72K2837X	FWD ROT YAW PULSE B	1 S/S
				KZ_5 4.3	1/30	---		1	V72X2798X	FWD ROT YAW PULSE LT	1 S/S



PNL F2

PNL F4

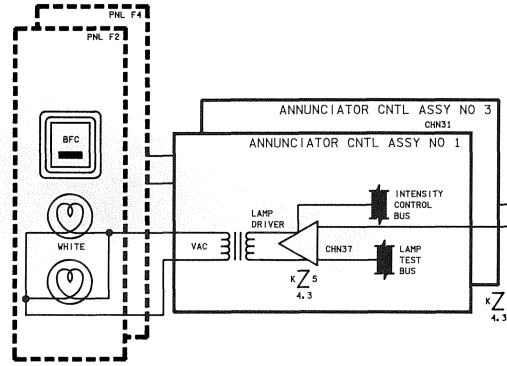

(TYPICAL 4 SWITCHES)

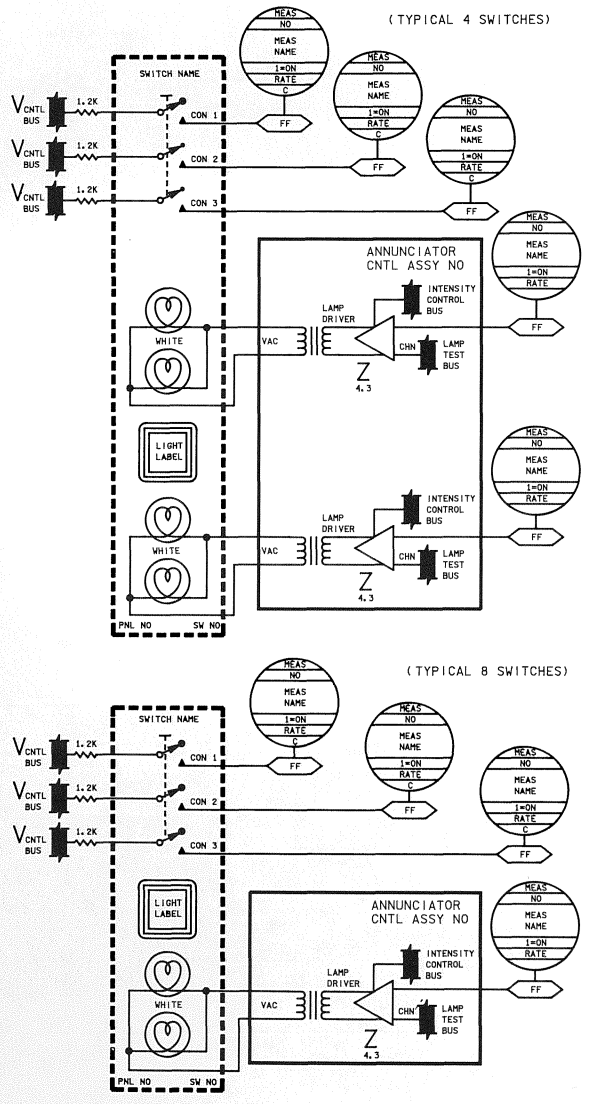

SWITCH NAME
SPD BK/THROT
BODY FLAP

SWITCH NAME
PITCH
ROLL/YAW

(TYPICAL 8 SWITCHES)

SWITCH NAME
PITCH
ROLL/YAW

BASIC REV E

DATE: 09/11/90 | NAME: MDU | VERSION: INK:1

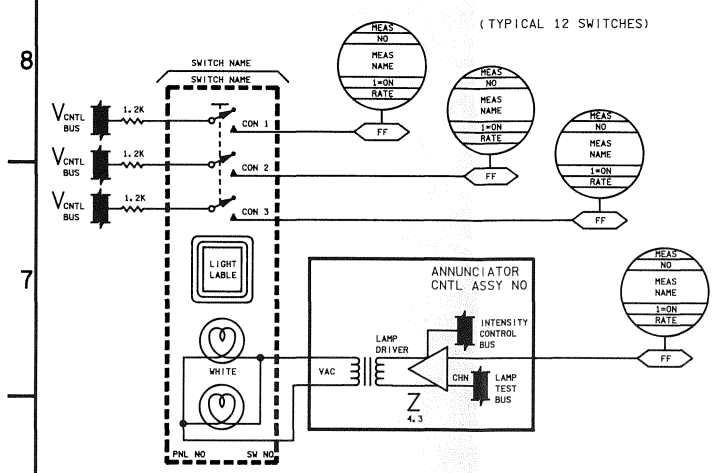

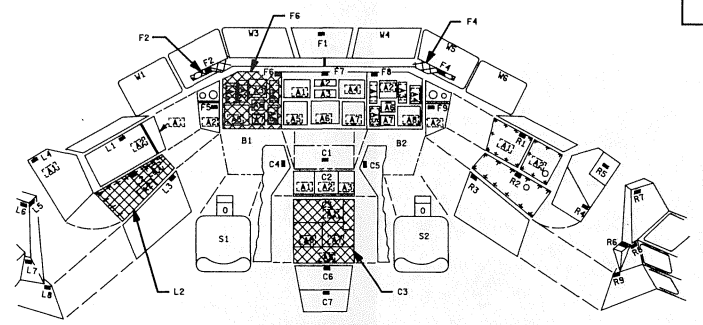

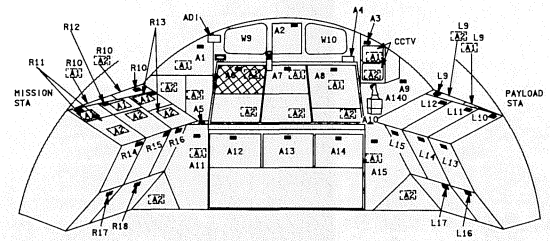

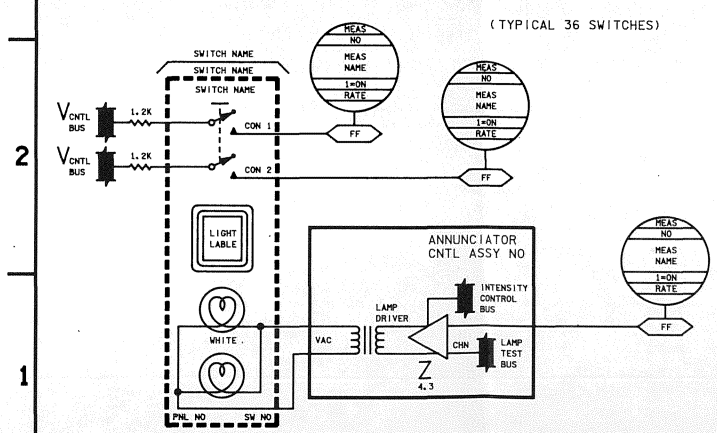

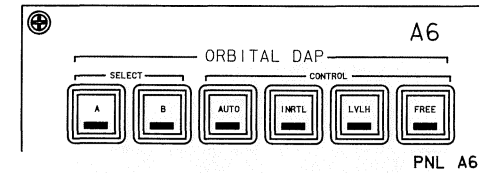

PNL A6

SWITCH NAME	PNL NO	SW NO	LIGHT LABEL	ANNUN CNTL Z 4.3	ANNUN CNTL ASSY NO/ CHN	CON	V_{CNTL} BUS	FF MDM	MEAS NO	MEAS NAME	MAX DWNLINK RATE
ORBITAL DAP, SELECT	A6	S8	A			1	CA2	3	V72K6430X	AFT DAP SELECT A-A	12.5 S/S
						2	BC2	4	V72K6431X	AFT DAP SELECT A-B	12.5 S/S
						3	AB2	1	V72K6419X	AFT DAP SELECT A-C	12.5 S/S
							---	3	V72K6421X	AFT DAP SELECT A LT	------
		S9	B	K Z 2 4.3	4/1	1	CA2	3	V72K6432X	AFT DAP SELECT B-A	12.5 S/S
						2	BC2	4	V72K6433X	AFT DAP SELECT B-B	12.5 S/S
						3	AB2	1	V72K6420X	AFT DAP SELECT B-C	12.5 S/S
							---	3	V72K6422X	AFT DAP SELECT B LT	------
ORBITAL DAP, CONTROL	A6	S10	AUTO	K Z 2 4.3	4/3	1	CA2	3	V72K6490X	AFT DAP AUTO A	12.5 S/S
						2	BC2	4	V72K6491X	AFT DAP AUTO B	12.5 S/S
						3	AB2	1	V72K6492X	AFT DAP AUTO C	12.5 S/S
							---	3	V72K6498X	AFT DAP AUTO LT	------
		S11	INRTL	K Z 2 4.3	4/5	1	CA2	3	V72K6495X	AFT DAP MAN INRTL A	12.5 S/S
						2	BC2	4	V72K6496X	AFT DAP MAN INRTL B	12.5 S/S
						3	AB2	1	V72K6497X	AFT DAP MAN INRTL C	12.5 S/S
							---	3	V72K6499X	AFT DAP MAN INRTL LT	------
		S12	LVLH	K Z 1 4.3	5/1	1	CA2	3	V72K6517X	AFT DAP MAN LVLH A	1 S/S
						2	BC2	4	V72K6518X	AFT DAP MAN LVLH B	1 S/S
						3	AB2	1	V72K6515X	AFT DAP MAN LVLH C	1 S/S
							---	3	V72K6542X	AFT DAP MAN LVLH LT	------
		S13	FREE	K Z 1 4.3	5/3	1	CA2	3	V72K6412X	AFT DAP MAN FREE DFT A	1 S/S
						2	BC2	4	V72K6413X	AFT DAP MAN FREE DFT B	1 S/S
						3	AB2	1	V72K6414X	AFT DAP MAN FREE DFT C	1 S/S
				K Z 1 4.3	5/5		---	3	V72K6417X	AFT DAP MAN FREE DFT LT	------

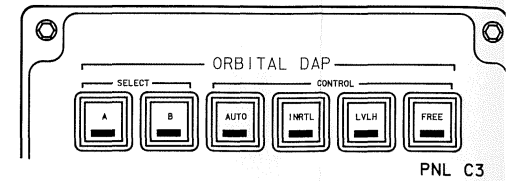

PNL C3

SWITCH NAME	PNL NO	SW NO	LIGHT LABEL	ANNUN CNTL Z 4.3	ANNUN CNTL ASSY NO/ CHN	CON	V_{CNTL} BUS	FF MDM	MEAS NO	MEAS NAME
ORBITAL DAP, SELECT	C3	S1	A			1	AB3	1	V72K2801X	FWD DAP SELECT A-A
						2	BC3	2	V72K2802X	FWD DAP SELECT A-B
						3	CA3	3	V72K2805X	FWD DAP SELECT A-C
							---	1	V72X2807X	FWD DAP SELECT A LT
		S2	B	K Z 3 4.3	3/2	1	AB3	1	V72K2803X	FWD DAP SELECT B-A
						2	BC3	2	V72K2804X	FWD DAP SELECT B-B
						3	CA3	3	V72K2806X	FWD DAP SELECT B-C
							---	1	V72X2808X	FWD DAP SELECT B LT
ORBITAL DAP, CONTROL	C3	S3	AUTO	K Z 3 4.3	3/4	1	AB3	1	V72K2840X	FWD DAP AUTO A
						2	BC3	2	V72K2841X	FWD DAP AUTO B
						3	CA3	3	V72K2842X	FWD DAP AUTO C
							---	1	V72X2850X	FWD DAP AUTO LT
		S4	INRTL	K Z 3 4.3	3/6	1	AB3	1	V72K2845X	FWD DAP MAN INRTL A
						2	BC3	2	V72K2846X	FWD DAP MAN INRTL B
						3	CA3	3	V72K2847X	FWD DAP MAN INRTL C
							---	1	V72X2849X	FWD DAP MAN INRTL LT
		S5	LVLH	K Z 5 4.3	3/2	1	AB3	1	V72K2864X	FWD RCS MAN LVLH A
						2	BC3	2	V72K2865X	FWD RCS MAN LVLH B
						3	CA3	3	V72K2895X	FWD RCS MAN LVLH C
							---	1	V72X2868X	FWD RCS MAN LVLH LT
		S6	FREE	K Z 5 4.3	1/2	1	AB3	1	V72K2892X	FWD RCS MAN FREE DFT
						2	BC3	2	V72K2893X	FWD RCS MAN FREE DFT
						3	CA3	3	V72K2894X	FWD RCS MAN FREE DFT
				K Z 5 4.3	1/2		---	1	V72X2897X	FWD RCS MAN FREE DFT

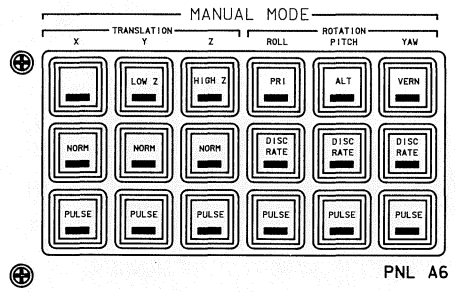

PNL A6

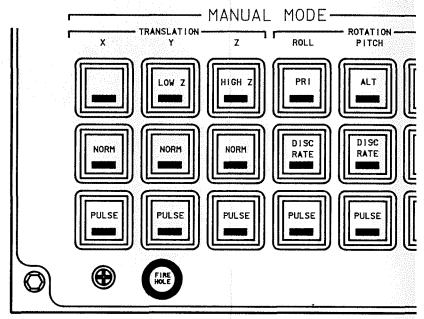

SWITCH NAME	PNL NO	SW NO	LIGHT LABEL	ANNUN CNTL Z 4.3	ANNUN CNTL ASSY NO/ CHN	CON	V_{CNTL} BUS	FF MDM	MEAS NO	MEAS NAME	MAX DWNLINK RATE
MANUAL MODE, TRANSLATION, X	A6	S14	(BLANK)			1	CA2	3	------	------	------
						2	BC2	4	------	------	------
							---	3	------	------	------
		S20	NORM	K Z 2 4.3	4/9	1	CA2	3	V72K6510X	AFT TRANSL X NORM A	1 S/S
						2	BC2	4	V72K6511X	AFT TRANSL X NORM B	1 S/S
					4/17		---	3	V72X6540X	AFT TRANSL X NORM LT	------
		S26	PULSE			1	CA2	3	V72K6513X	AFT TRANSL X PULSE A	1 S/S
						2	BC2	4	V72K6514X	AFT TRANSL X PULSE B	1 S/S
					4/25		---	3	V72X6541X	AFT TRANSL X PULSE LT	------
MANUAL MODE, TRANSLATION, Y	A6	S15	LOW Z			1	CA2	3	V72K6527X	AFT TRANSL LOW Z A	1 S/S
						2	BC2	4	V72K6528X	AFT TRANSL LOW Z B	1 S/S
					4/11		---	3	V72X6545X	AFT TRANSL LOW Z LT	------
		S21	NORM			1	CA2	3	V72K6520X	AFT TRANSL Y NORM A	1 S/S
						2	BC2	4	V72K6521X	AFT TRANSL Y NORM B	1 S/S
					4/19		---	3	V72X6543X	AFT TRANSL Y NORM LT	------
		S27	PULSE			1	CA2	3	V72K6523X	AFT TRANSL Y PULSE A	1 S/S
						2	BC2	4	V72K6524X	AFT TRANSL Y PULSE B	1 S/S
					4/27		---	3	V72X6544X	AFT TRANSL Y PULSE LT	------
MANUAL MODE, TRANSLATION, Z	A6	S16	HIGH Z			1	CA2	3	V72K6537X	AFT TRANSL Z HIGH A	1 S/S
						2	BC2	4	V72K6538X	AFT TRANSL Z HIGH B	1 S/S
					4/13		---	3	V72X6548X	AFT TRANSL Z HIGH LT	------
		S22	NORM			1	CA2	3	V72K6530X	AFT TRANSL Z NORM A	1 S/S
						2	BC2	4	V72K6531X	AFT TRANSL Z NORM B	1 S/S
					4/21		---	3	V72X6546X	AFT TRANSL Z NORM LT	------
		S28	PULSE			1	CA2	3	V72K6533X	AFT TRANSL Z PULSE A	1 S/S
						2	BC2	4	V72K6534X	AFT TRANSL Z PULSE B	1 S/S
					4/29		---	3	V72X6547X	AFT TRANSL Z PULSE LT	------
MANUAL MODE, ROTATION, ROLL	A6	S17	PRI	K Z 2 4.3		1	CA2	3	V72K6505X	AFT RCS JETS NORM A	1 S/S
						2	BC2	4	V72K6506X	AFT RCS JETS NORM B	1 S/S
					5/9		---	3	V72X6502X	AFT RCS JETS NORM LT	------
		S23	DISC RATE	K Z 1 4.3		1	CA2	3	V72K6440X	AFT ROT ROLL DISC A	1 S/S
						2	BC2	4	V72K6441X	AFT ROT ROLL DISC B	1 S/S
					5/17		---	3	V72X6450X	AFT ROT ROLL DISC LT	------
		S29	PULSE			1	CA2	3	V72K6448X	AFT ROT ROLL PULSE A	1 S/S
						2	BC2	4	V72K6449X	AFT ROT ROLL PULSE B	1 S/S
					5/25		---	3	V72X6452X	AFT ROT ROLL PULSE LT	------
MANUAL MODE, ROTATION, PITCH	A6	S18	ALT			1	CA2	3	V72K6410X	AFT ALT PRCS MODE A	1 S/S
						2	BC2	4	V72K6411X	AFT ALT PRCS MODE B	1 S/S
					5/11		---	3	V72X6416X	AFT ALT PRCS MODE LT	------
		S24	DISC RATE			1	CA2	3	V72K6460X	AFT ROT PITCH DISC A	1 S/S
						2	BC2	4	V72K6461X	AFT ROT PITCH DISC B	1 S/S
					5/19		---	3	V72X6470X	AFT ROT PITCH DISC LT	------
		S30	PULSE			1	CA2	3	V72K6468X	AFT ROT PITCH PULSE A	1 S/S
						2	BC2	4	V72K6469X	AFT ROT PITCH PULSE B	1 S/S
					5/27		---	3	V72X6472X	AFT ROT PITCH PULSE LT	------
MANUAL MODE, ROTATION, YAW	A6	S19	VERN			1	CA2	3	V72K6507X	AFT RCS JETS VERN A	1 S/S
						2	BC2	4	V72K6508X	AFT RCS JETS VERN B	1 S/S
					5/13		---	3	V72X6503X	AFT RCS JETS VERN LT	------
		S25	DISC RATE			1	CA2	3	V72K6480X	AFT ROT YAW DISC A	1 S/S
						2	BC2	4	V72K6481X	AFT ROT YAW DISC B	1 S/S
					5/21		---	3	V72X6473X	AFT ROT YAW DISC LT	------
		S31	PULSE			1	CA2	3	V72K6488X	AFT ROT YAW PULSE A	1 S/S
						2	BC2	4	V72K6489X	AFT ROT YAW PULSE B	1 S/S
				K Z 1 4.3	5/29		---	3	V72X6475X	AFT ROT YAW PULSE LT	------

SWITCH NAME	PNL NO	SW NO	LIGHT LABEL	ANNUN CNTL Z 4.3	ANNUN CNTL ASSY NO/ CHN	CON	V_{CNTL} BUS	FF MDM	MEAS NO	MEAS NAME
MANUAL MODE, TRANSLATION, X	C3	S16	(BLANK)			1	AB3	1	------	------
						2	BC3	2	------	------
							---	1	------	------
		S19	NORM	K Z 3 4.3	3/10	1	AB3	1	V72K2860X	FWD TRANSL X NO
						2	BC3	2	V72K2861X	FWD TRANSL X NO
					3/18		---	1	V72X2866X	FWD TRANSL X NO
		S22	PULSE			1	AB3	1	V72K2862X	FWD TRANSL X PU
						2	BC3	2	V72K2863X	FWD TRANSL X PU
					3/26		---	1	V72X2867X	FWD TRANSL X PU
MANUAL MODE, TRANSLATION, Y	C3	S17	LOW Z			1	AB3	1	V72K2874X	FWD TRANSL LOW
						2	BC3	2	V72K2875X	FWD TRANSL LOW
					3/12		---	1	V72X2878X	FWD TRANSL LOW
		S20	NORM			1	AB3	1	V72K2870X	FWD TRANSL Y NO
						2	BC3	2	V72K2871X	FWD TRANSL Y NO
					3/20		---	1	V72X2876X	FWD TRANSL Y NO
		S23	PULSE			1	AB3	1	V72K2872X	FWD TRANSL Y PU
						2	BC3	2	V72K2873X	FWD TRANSL Y PU
					3/28		---	1	V72X2877X	FWD TRANSL Y PU
MANUAL MODE, TRANSLATION, Z	C3	S18	HIGH Z			1	AB3	1	V72K2884X	FWD TRANSL Z HI
						2	BC3	2	V72K2885X	FWD TRANSL Z HI
					3/14		---	1	V72X2888X	FWD TRANSL Z HI
		S21	NORM			1	AB3	1	V72K2880X	FWD TRANSL Z NO
						2	BC3	2	V72K2881X	FWD TRANSL Z NO
					3/22		---	1	V72X2886X	FWD TRANSL Z NO
		S24	PULSE			1	AB3	1	V72K2882X	FWD TRANSL Z PU
						2	BC3	2	V72K2883X	FWD TRANSL Z PU
					3/30		---	1	V72X2887X	FWD TRANSL Z PU
MANUAL MODE, ROTATION, ROLL	C3	S7	PRI			1	AB3	1	V72K2851X	FWD RCS JETS NO
						2	BC3	2	V72K2852X	FWD RCS JETS NO
					1/10		---	1	V72X2855X	FWD RCS JETS NO
		S10	DISC RATE			1	AB3	1	V72K2812X	FWD ROT ROLL DI
						2	BC3	2	V72K2813X	FWD ROT ROLL DI
					1/18		---	1	V72X2790X	FWD ROT ROLL DI
		S13	PULSE			1	AB3	1	V72K2816X	FWD ROT ROLL PU
						2	BC3	2	V72K2817X	FWD ROT ROLL PU
					1/26		---	1	V72X2792X	FWD ROT ROLL PU
MANUAL MODE, ROTATION, PITCH	C3	S8	ALT	K Z 3 4.3		1	AB3	1	V72K2890X	FWD ALT PRCS MO
						2	BC3	2	V72K2891X	FWD ALT PRCS MO
					1/12		---	1	V72X2896X	FWD ALT PRCS MO
		S11	DISC RATE	K Z 5 4.3		1	AB3	1	V72K2822X	FWD ROT PITCH D
						2	BC3	2	V72K2823X	FWD ROT PITCH D
					1/20		---	1	V72X2793X	FWD ROT PITCH D
		S14	PULSE			1	AB3	1	V72K2826X	FWD ROT PITCH PU
						2	BC3	2	V72K2827X	FWD ROT PITCH PU
					1/28		---	1	V72X2795X	FWD ROT PITCH PU
MANUAL MODE, ROTATION, YAW	C3	S9	VERN			1	AB3	1	V72K2853X	FWD RCS JETS VER
						2	BC3	2	V72K2854X	FWD RCS JETS VER
					1/14		---	1	V72X2856X	FWD RCS JETS VER
		S12	DISC RATE			1	AB3	1	V72K2832X	FWD ROT YAW DISC
						2	BC3	2	V72K2833X	FWD ROT YAW DISC
					1/22		---	1	V72X2796X	FWD ROT YAW DISC
		S15	PULSE			1	AB3	1	V72K2836X	FWD ROT YAW PULS
						2	BC3	2	V72K2837X	FWD ROT YAW PULS
				K Z 5 4.3	1/30		---	1	V72X2798X	FWD ROT YAW PULS

BASIC REV E

DATE: 8/14/87	NAME: JMB	VERSION: INK 4
DATE: 9/5/87	NAME: MPM	VERSION: INK 5
DATE: 08/18/90	NAME: MAG	VERSION: INK 6

V58 P0812A LIB ELVN SEC ΔP 1 −3000 TO +3000 PSID 25 S/S (P0813A) (P0814A) (P0815A)
V58 P0962A ROB ELVN SEC ΔP 1 −3000 TO +3000 PSID 25 S/S (P0963A) (P0964A) (P0965A)
V57 P0160A RUDDER DELTA PRESS −3000 TO +3000 PSID 25 S/S (P0161A) (P0162A) (P0163A)
V79 C3280A LIB ELVN DRVR 1 OUT −10 TO +10 MA 25 S/S (C3281A) (C3282A) (C3283A)
V79 C3292A ROB ELVN DRVR 1 OUT −10 TO +10 MA 25 S/S (C3293A) (C3294A) (C3295A)
V79 C3305A RUDDER DRVR 1 OUT −10 TO +10 MA 25 S/S (C3306A) (C3307A) (C3308A)
OA1 (OA2) (OA3)

V58 P0862A LOB ELVN SEC ΔP 1 −3000 TO +3000 PSID 25 S/S (P0863A) (P0864A) (P0865A)
V58 P0912A RIB ELVN SEC ΔP 1 −3000 TO +3000 PSID 25 S/S (P0913A) (P0914A) (P0915A)
V57 P0260A SPD BK DELTA PRESS −3000 TO +3000 PSID 25 S/S (P0261A) (P0262A) (P0263A)
V79 C3284A LOB ELVN DRVR 1 OUT −10 TO +10 MA 25 S/S (C3285A) (C3286A) (C3287A)
V79 C3288A RIB ELVN DRVR 1 OUT −10 TO +10 MA 25 S/S (C3289A) (C3290A) (C3291A)
V79 C3315A SPD BK DRVR 1 OUT −10 TO +10 MA 25 S/S (C3316A) (C3317A) (C3318A)
OA1 (OA2) (OA3)

V58 P0866C LOB ELVN PRI ΔP −3000 TO +3000 PSID 12.5 S/S (P0867C) (1 S/S) (P0868C) (1 S/S) (P0869C) (1 S/S)
V58 P0816C LIB ELVN PRI ΔP 1 −3000 TO +3000 PSID 12.5 S/S (P0817C) (1 S/S) (P0818C) (1 S/S) (P0819C) (1 S/S)
V58 P0916C RIB ELVN PRI ΔP 1 −3000 TO +3000 PSID 12.5 S/S (P0917C) (1 S/S) (P0918C) (1 S/S) (P0919C) (1 S/S)
V58 P0966C ROB ELVN PRI ΔP 1 −3000 TO +3000 PSID 12.5 S/S (P0967C) (1 S/S) (P0968C) (1 S/S) (P0969C) (1 S/S)
FA 1 (FA 2) (FA 3) (FA 4)

ASA 4
ASA 3
ASA 2
ASA 1
RUDDER
SPEED BRAKE
RIGHT OUTBOARD ELEVON
RIGHT INBOARD ELEVON
LEFT INBOARD ELEVON
LEFT OUTBOARD ELEVON

PRIMARY Δ PRESSURE (ELEVONS ONLY)
SECONDARY Δ PRESSURE
POSITION FEEDBACK
POSITION ERROR COMMAND
ISOLATE COMMAND

RIGHT OUTBOARD ELEVON ACTUATOR
RIGHT INBOARD ELEVON ACTUATOR
LEFT INBOARD ELEVON ACTUATOR
LEFT OUTBOARD ELEVON ACTUATOR
CHANNEL 4
CHANNEL 3
CHANNEL 2
CHANNEL 1
PRIMARY ΔP
SECONDARY ΔP
POSITION FEEDBACK
SERVO TORQUER
ISOLATION VALVE
LVDT
26 VAC
KZ6

V32 X4550X FCS CHANNEL FAILURE 1=FAIL 1 S/S
FF 3
C&W ELECTRONICS
(AMBER) FCS CHANNEL

MML	TITLE
V79X3275X	ROB ELVN ACTR 1 FAIL
V79X3276X	ROB ELVN ACTR 2 FAIL
V79X3277X	ROB ELVN ACTR 3 FAIL
V79X3278X	ROB ELVN ACTR 4 FAIL
V79X3270X	RIB ELVN ACTR 1 FAIL
V79X3271X	RIB ELVN ACTR 2 FAIL
V79X3272X	RIB ELVN ACTR 3 FAIL
V79X3273X	RIB ELVN ACTR 4 FAIL
V79X3265X	LOB ELVN ACTR 1 FAIL
V79X3266X	LOB ELVN ACTR 2 FAIL
V79X3267X	LOB ELVN ACTR 3 FAIL
V79X3268X	LOB ELVN ACTR 4 FAIL
V79X3260X	LIB ELVN ACTR 1 FAIL
V79X3261X	LIB ELVN ACTR 2 FAIL
V79X3262X	LIB ELVN ACTR 3 FAIL
V79X3263X	LIB ELVN ACTR 4 FAIL
V79X3336X	SPD BK ACTR 1 FAIL
V79X3337X	SPD BK ACTR 2 FAIL
V79X3338X	SPD BK ACTR 3 FAIL
V79X3339X	SPD BK ACTR 4 FAIL
V79X3331X	RUDDER ACTR 1 FAIL
V79X3332X	RUDDER ACTR 2 FAIL
V79X3333X	RUDDER ACTR 3 FAIL
V79X3334X	RUDDER ACTR 4 FAIL

LEAD LAG
UP/DN INTEGRATOR
UP ~ 120±20 MSEC
DN ~ 480±80 MSEC
CLR
S Q R Q
4MA
HI PASS FILTER 5HZ
100 HZ REF CLK
ΔP FAULT BYPASS
ISOLATE CMD
OVERRIDE MONITOR
BYPASS MONITOR
120 MSEC TIME DELAY
CLR
26VAC PRESENT
+15VDC PRESENT
−15VDC PRESENT
+8.5VDC PRESENT
−8.5VDC PRESENT
400 HZ REF PRSNT
28 VDC
SD

REDUNDANCY/CHANNEL EQUALIZATION
LAG NETWORK
ΔP DEADBAND ±1250 PSI
LAG/LIMITER/AMPL
PRI ΔP SERVO (ELEVONS ONLY)
POSITION FEEDBACK
LO PASS FILTER
DEMOD
400 HZ REF
HI PASS FILTER

SERVO VALVE DRIVER
LIMITER

V79 X3201E BODY FLAP ENA 1 1=ON 10 S/S (X3204E) (X3207E)
V79 X3202E BODY FLAP UP 1 1=ON 10 S/S (X3205E) (X3208E)
V79 X3203E BODY FLAP DN 1 1=ON 10 S/S (X3206E) (X3209E)
OA1 (OA2) (OA3)

BODY FLAP ACTUATOR
CHANNEL 4
CHANNEL 3
CHANNEL 2
CHANNEL 1
DOWN
UP
ENABLE
POSITION XDUCER
RVDT
28 VAC

BODY FLAP POSITION FEEDBACK
BODY FLAP ENABLE COMMAND
BODY FLAP UP COMMAND
BODY FLAP DN COMMAND

RUDDER ACTUATOR
SPEED BRAKE ACTUATOR
CHANNEL 4
CHANNEL 3
CHANNEL 2
CHANNEL 1
SECONDARY ΔP
POSITION FEEDBACK
SERVO TORQUER
ISOLATION VALVE
LVDT
26 VAC
KZ6

9. TELEMETRY RATES DO NOT APPLY TO OPS 9

D EQUALIZATION:
ELEVONS
INBOARD − 9.02 MA
OUTBOARD − 10.78 MA
RUD/SPBK − 8.25 MA
DRIVER OUTPUT:
ELEVONS − 9.0 MA
RUD/SPBK − 9.8 MA

1 CHANNELS 2, 3, AND 4 NOT ON DOWNLIST

2 WHEN AN FCS CHANNEL SWITCH IS MOVED BETWEEN ANY TWO POSITIONS (I.E., AUTO TO OVERRIDE, OVERRIDE TO AUTO, OR OFF TO AUTO) THE POWER TO THE AFFECTED CHANNEL WILL BE INTERRUPTED AND THE CHANNEL WILL BE BYPASSED (FAIL MODE) FOR A MINIMUM TIME DURATION OF 510 MSEC TO A MAXIMUM TIME DURATION OF 1370 MSEC DUE TO THE BREAK-BEFORE-MAKE SWITCH CHARACTERISTICS. REF RI INTERNAL LETTER 283-220-86-009 "EFFECTS OF THE BREAK-BEFORE-MAKE DESIGN OF THE FCS CHANNEL SWITCH"

3 SEE DWG 9.16 SHEET 2

4 SEE DWG 9.16 SHEET 1

5 THE REDUNDANCY/CHANNEL EQUALIZATION CKT PROVIDES F/B THAT IS OUT OF PHASE WITH POSITION CMD TO NULL SYS BIASES (WHEN ΔP IS > 1250 PSI). THE LAG LIMITER/AMPL LIMITS THIS F/B TO INSURE THAT THE ΔP FAULT DETECTION RESPONDS TO REAL FAILURES

6 PRIMARY PRESSURE IS ONLY USED IN THE ELEVON CIRCUITS OF THE AEROSURFACE SERVO AMPLIFIERS

NOTES: 7 ASA 4 BODY FLAP CHANNEL IS ONLY USED FOR BODY FLAP POSITION FEEDBACK. IT IS NOT USED TO DRIVE BODY FLAP

11 ASA SIG

SIGNATURE	DATE	NATIONAL AERONAUTICS AND SPACE ADMINISTRATION LYNDON B. JOHNSON SPACE CENTER HOUSTON, TEXAS
DSGN ARTHUR SEPULVEDA	6/14/78	
DR Alan L. Lotty	7/24/78	
ENGR P.E. PERKINS	8/17/90	AERO SURFACE SIGNAL FLOW
ENGR Phil Perkins	8/27/90	
APP Taylor J. Elsee	8/30/90	
MGR John A. Thomson	9/5/90	SPACE SHUTTLE
OPNIPLAN Jerry Kimbrough	9-6-90	ALL
LTR E PCN		121 X 34

DWG NO 9.11
PAGE SHEET 1 OF 1

BASIC REV E

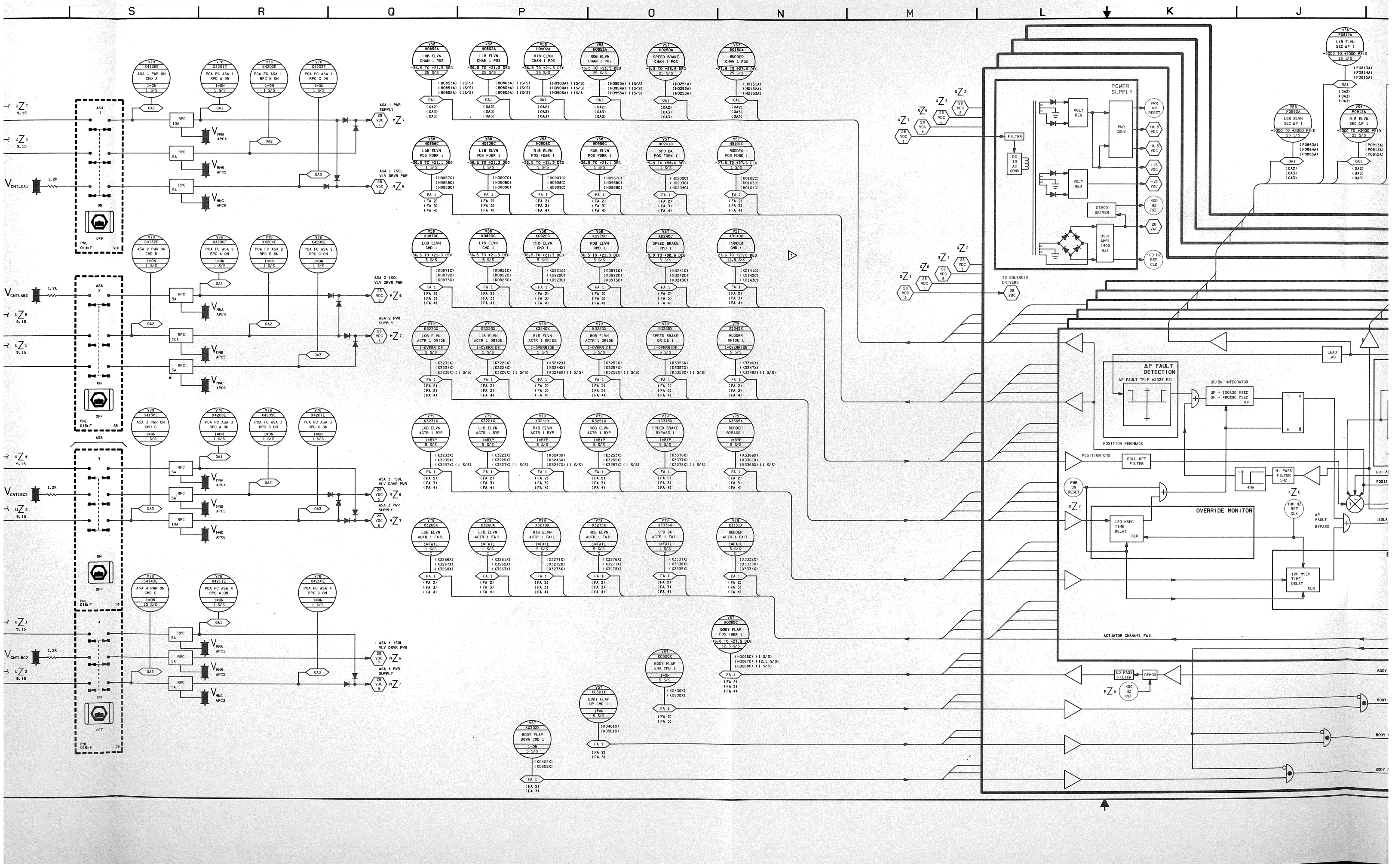

S
R
Q
P
O
N
M
L
K
J
ASA 1
ASA 2
ASA 3
ASA 4
ON
OFF
PNL 014*F
PNL 015*F
PNL 016*F
ASA 1 PWR SUPPLY
ASA 1 ISOL VLV DRVR PWR
ASA 2 ISOL VLV DRVR PWR
ASA 2 PWR SUPPLY
ASA 3 ISOL VLV DRVR PWR
ASA 3 PWR SUPPLY
ASA 4 ISOL VLV DRVR PWR
ASA 4 PWR SUPPLY
POWER SUPPLY
FILTER
DC TO AC CONV
VOLT REG
PWR CONV
DEMOD DRIVER
OSC/AMPL (400 HZ)
PWR ON RESET
+8.5 VDC
-8.5 VDC
+15 VDC
-15 VDC
400 HZ REF
26 VAC
100 HZ REF CLK
TO SOLENOID DRIVERS
28 VDC
LEAD LAG
ΔP FAULT DETECTION
ΔP FAULT TRIP ±2025 PSI
UP/DN INTEGRATOR
UP ~ 120±20 MSEC
DN ~ 480±80 MSEC
CLR
POSITION FEEDBACK
POSITION CMD
ROLL-OFF FILTER
HI PASS FILTER 5HZ
4MA
OVERRIDE MONITOR
120 MSEC TIME DELAY
100 HZ REF CLK
ΔP FAULT BYPASS
ACTUATOR CHANNEL FAIL
LO PASS FILTER
DEMOD
400 HZ REF
BODY

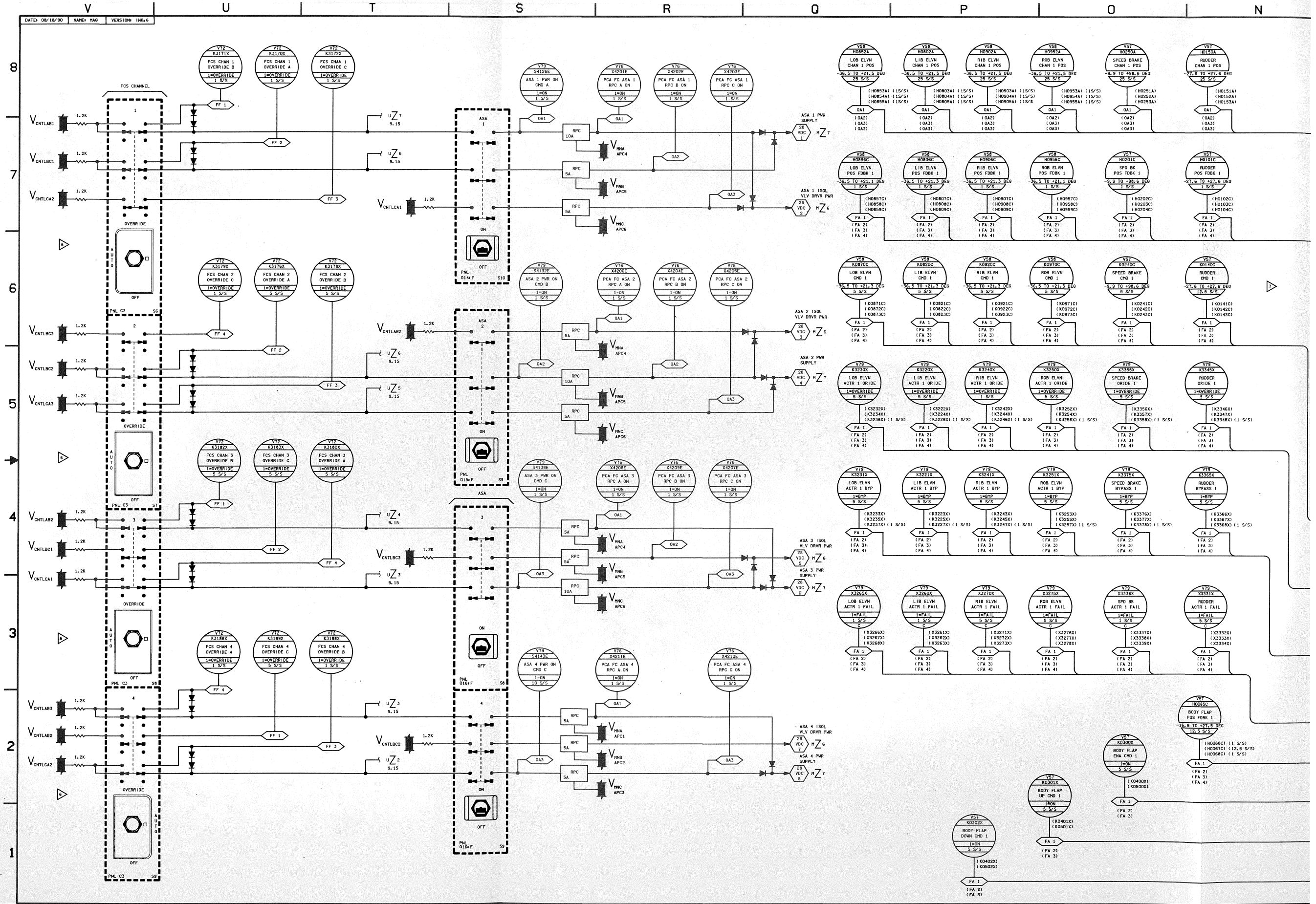
DATE: 08/18/90
NAME: MAG
VERSION: INK 6
V U T S R Q P O N
8 7 6 5 4 3 2 1
FCS CHANNEL
OVERRIDE
AUTO
OFF
ON
PNL C3
PNL 014F
PNL 015F
PNL 016F
S6
S7
S8
S9
S10
ASA
ASA 1
ASA 2
1.2K
FF 1
FF 2
FF 3
FF 4
OA1
OA2
OA3
RPC 10A
RPC 5A
FCS CHAN 1 OVERRIDE B 1=OVERRIDE 1 S/S
FCS CHAN 1 OVERRIDE A 1=OVERRIDE 1 S/S
FCS CHAN 1 OVERRIDE C 1=OVERRIDE 1 S/S
FCS CHAN 2 OVERRIDE C 1=OVERRIDE 1 S/S
FCS CHAN 2 OVERRIDE A 1=OVERRIDE 5 S/S
FCS CHAN 2 OVERRIDE B 1=OVERRIDE 5 S/S
FCS CHAN 3 OVERRIDE B 1=OVERRIDE 5 S/S
FCS CHAN 3 OVERRIDE C 1=OVERRIDE 5 S/S
FCS CHAN 3 OVERRIDE A 1=OVERRIDE 5 S/S
FCS CHAN 4 OVERRIDE A 1=OVERRIDE 1 S/S
FCS CHAN 4 OVERRIDE C 1=OVERRIDE 5 S/S
FCS CHAN 4 OVERRIDE B 1=OVERRIDE 1 S/S
ASA 1 PWR ON CMD A 1=ON 1 S/S
ASA 2 PWR ON CMD B 1=ON 1 S/S
ASA 3 PWR ON CMD C 1=ON 1 S/S
ASA 4 PWR ON CMD C 1=ON 10 S/S
PCA FC ASA 1 RPC A ON 1=ON 1 S/S
PCA FC ASA 1 RPC B ON 1=ON 1 S/S
PCA FC ASA 1 RPC C ON 1=ON 1 S/S
PCA FC ASA 2 RPC A ON 1=ON 1 S/S
PCA FC ASA 2 RPC B ON 1=ON 1 S/S
PCA FC ASA 2 RPC C ON 1=ON 1 S/S
PCA FC ASA 3 RPC A ON 1=ON 1 S/S
PCA FC ASA 3 RPC B ON 1=ON 1 S/S
PCA FC ASA 3 RPC C ON 1=ON 1 S/S
PCA FC ASA 4 RPC A ON 1=ON 1 S/S
PCA FC ASA 4 RPC B ON 1=ON 1 S/S
PCA FC ASA 4 RPC C ON 1=ON 1 S/S
ASA 1 PWR SUPPLY
ASA 1 ISOL VLV DRVR PWR
ASA 2 ISOL VLV DRVR PWR
ASA 2 PWR SUPPLY
ASA 3 ISOL VLV DRVR PWR
ASA 3 PWR SUPPLY
ASA 4 ISOL VLV DRVR PWR
ASA 4 PWR SUPPLY
LOB ELVN CHAN 1 POS
LIB ELVN CHAN 1 POS
RIB ELVN CHAN 1 POS
ROB ELVN CHAN 1 POS
SPEED BRAKE CHAN 1 POS
RUDDER CHAN 1 POS
LOB ELVN POS FDBK 1
LIB ELVN POS FDBK 1
RIB ELVN POS FDBK 1
ROB ELVN POS FDBK 1
SPD BK POS FDBK 1
RUDDER POS FDBK 1
LOB ELVN CMD 1
LIB ELVN CMD 1
RIB ELVN CMD 1
ROB ELVN CMD 1
SPEED BRAKE CMD 1
RUDDER CMD 1
LOB ELVN ACTR 1 ORIDE
LIB ELVN ACTR 1 ORIDE
RIB ELVN ACTR 1 ORIDE
ROB ELVN ACTR 1 ORIDE
SPEED BRAKE ORIDE 1
RUDDER ORIDE 1
LOB ELVN ACTR 1 BYP
LIB ELVN ACTR 1 BYP
RIB ELVN ACTR 1 BYP
ROB ELVN ACTR 1 BYP
SPEED BRAKE BYPASS 1
RUDDER BYPASS 1
LOB ELVN ACTR 1 FAIL
LIB ELVN ACTR 1 FAIL
RIB ELVN ACTR 1 FAIL
ROB ELVN ACTR 1 FAIL
SPD BK ACTR 1 FAIL
RUDDER ACTR 1 FAIL
BODY FLAP POS FDBK 1
BODY FLAP ENA CMD 1
BODY FLAP UP CMD 1
BODY FLAP DOWN CMD 1

BASIC REV E

DATE: 08/10/95	NAME: JMB	VERSION: BPT: 6
DATE: 08/14/95	NAME: LAM	VERSION: INK: 11
DATE: 07/25/96	NAME: MDU	VERSION: INK: 12

LEFT OMS TVC
RIGHT OMS TVC

SECONDARY YAW
SECONDARY PITCH
PRIMARY YAW
PRIMARY PITCH

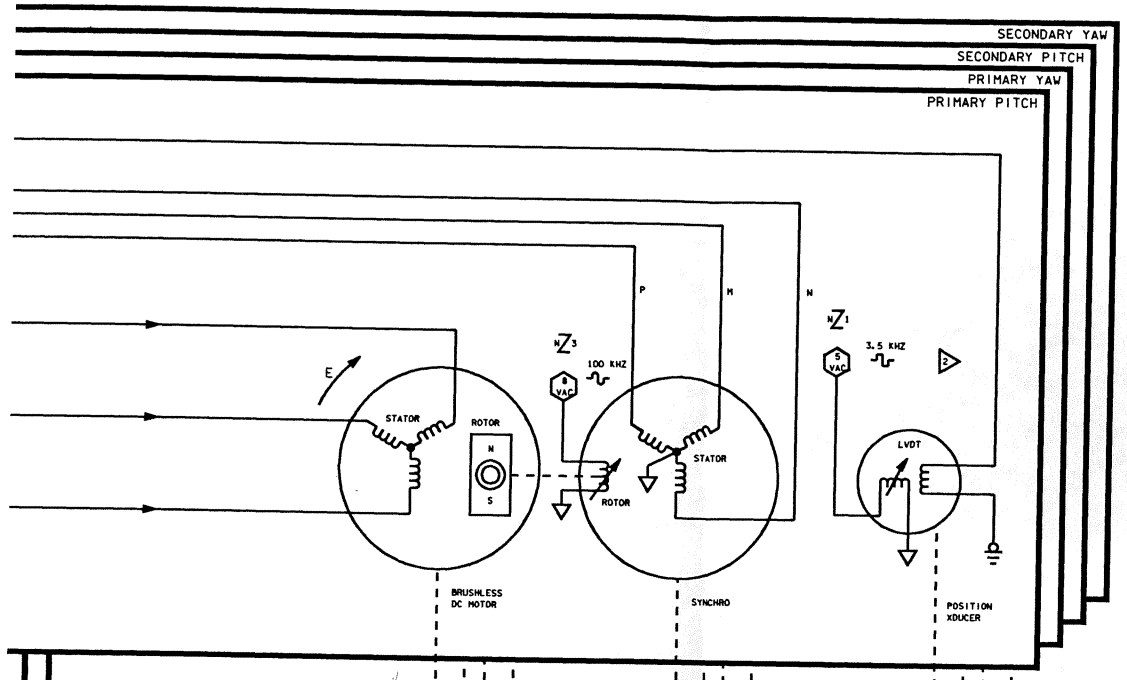

YAW ACTUATOR
PITCH ACTUATOR

SEC PITCH MOTOR
SEC PITCH SYN
SEC PITCH POSITION XDUCER

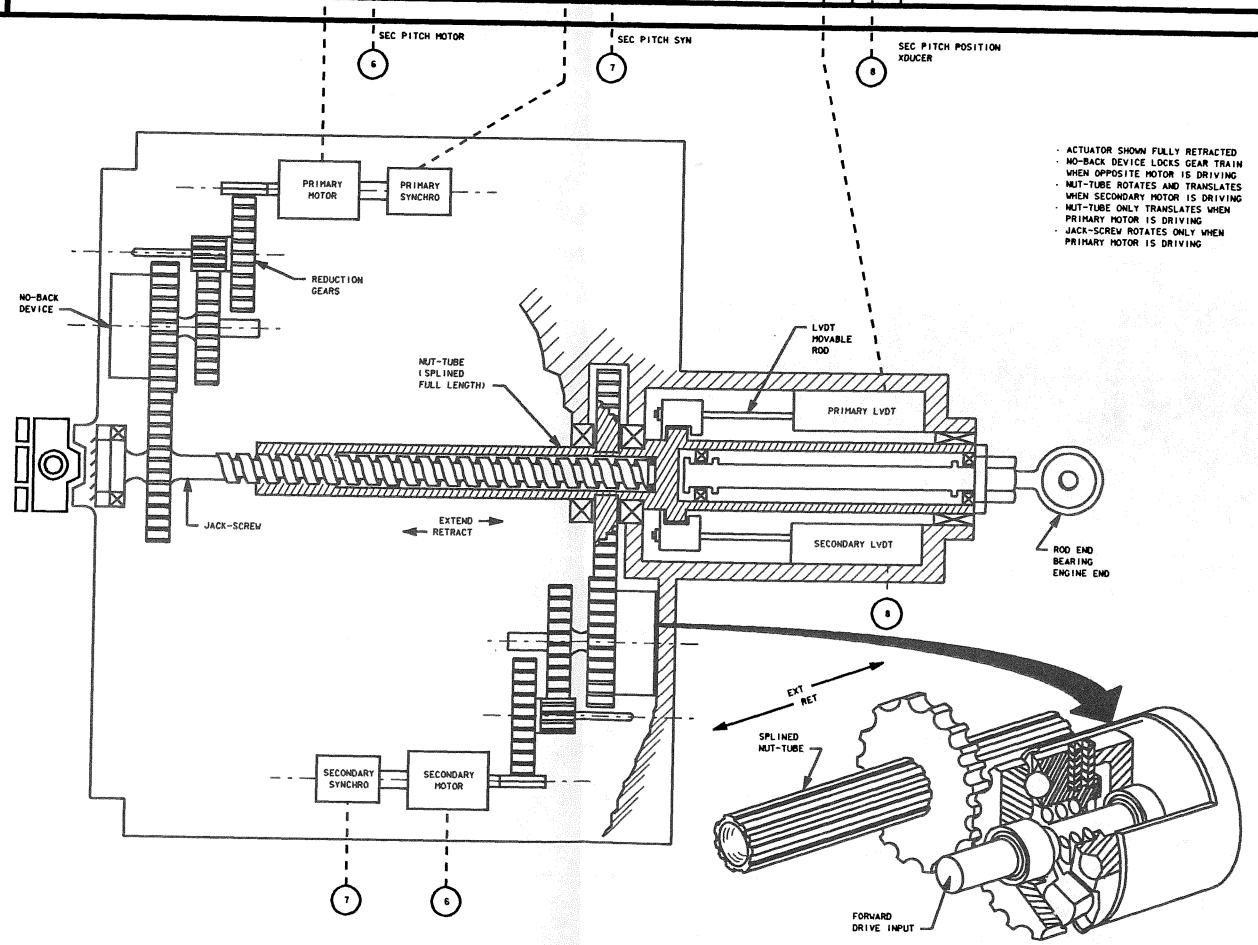

NO-BACK DEVICE DETAIL

- ACTUATOR SHOWN FULLY RETRACTED
- NO-BACK DEVICE LOCKS GEAR TRAIN WHEN OPPOSITE MOTOR IS DRIVING
- NUT-TUBE ROTATES AND TRANSLATES WHEN SECONDARY MOTOR IS DRIVING
- NUT-TUBE ONLY TRANSLATES WHEN PRIMARY MOTOR IS DRIVING
- JACK-SCREW ROTATES ONLY WHEN PRIMARY MOTOR IS DRIVING

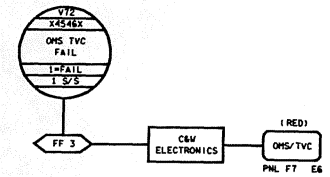

MNE NO	TITLE
V90X7677X	L OMS P GMBL FL FLAG
V90X7678X	R OMS P GMBL FL FLAG
V90X7679X	L OMS Y GMBL FL FLAG
V90X7680X	R OMS Y GMBL FL FLAG

RIGHT OMS ENGINE

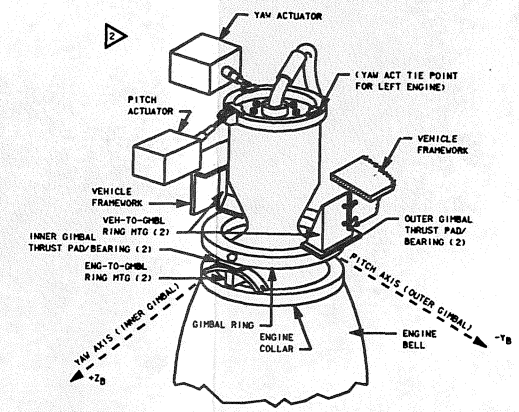

GIMBAL NULL MOUNTING ANGLES AND DEFLECTION RANGE

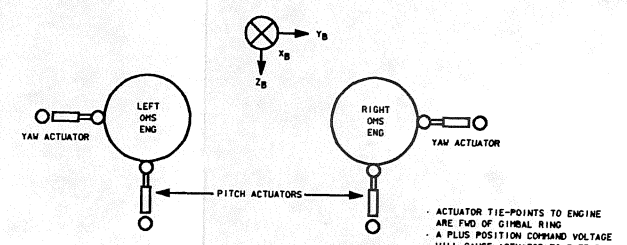

- ACTUATOR TIE-POINTS TO ENGINE ARE FWD OF GIMBAL RING
- A PLUS POSITION COMMAND VOLTAGE WILL CAUSE ACTUATOR TO EXTEND
- A MINUS POSITION COMMAND VOLTAGE WILL CAUSE ACTUATOR TO RETRACT

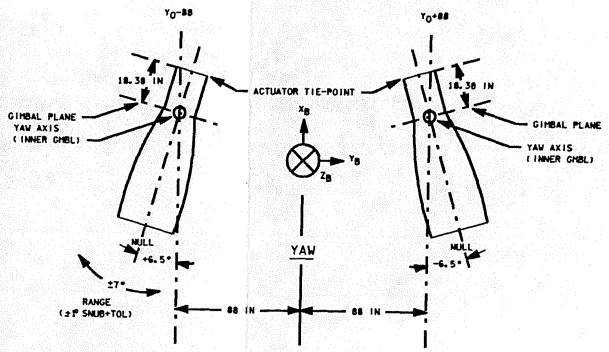

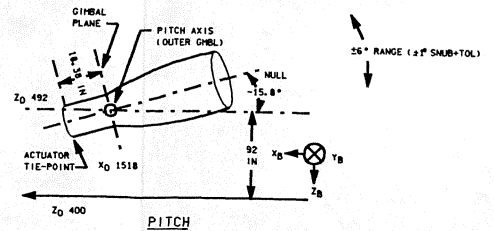

△ EACH TVC SYSTEM (PRI OR SEC) REQUIRES BOTH RPC'S (RPC'S ARE NOT REDUNDANT POWER SOURCES). EACH AXIS REQUIRES A MAXIMUM OF 6.5 AMPS (182 WATTS).

△ EACH TVC CONSISTS OF TWO CONTROLLERS. THE PRIMARY CONTROLLER DRIVES THE PRIMARY PITCH AND YAW. THE SECONDARY CONTROLLER DRIVES THE SECONDARY PITCH AND YAW

△ WHEN 8 SEC (2) SEC) TIMER TIMES OUT, THE CURRENT LIMITER THRESHOLD VALUE CHANGES FROM 10 AMPS TO A VALUE EQUAL TO 25 PERCENT OF NORMAL POWER TO MOTOR.

△ THE SAMPLE RATE IS 25 S/S IN OPS 8
12.5 S/S IN OPS 9 AND 1 S/S IN OPS 2

△ THE SAMPLE RATE IS 25 S/S IN OPS 6

△ ACTUATOR MOVEMENT IN ONE AXIS CAUSES A SMALL MOVEMENT OF THE ENGINE POSITION IN THE OTHER AXIS WHICH DOES NOT SHOW IN THE POSITION TRANSDUCER OUTPUT BECAUSE THE TRANSDUCER IS MEASURING ACTUATOR LENGTH AND NOT THE ENGINE GIMBAL ANGLE

NOTES:

△ GIMBAL ACTUATOR PERFORMANCE DATA

		INCHES	DEGREES
STROKE:	PITCH	5.79	±6
	YAW	4.38	±7
HYSTERESIS:	DEADZONE	.125	.4
	HYSTERESIS	.1	.336
ACCELERATION:		20.7 IN/SEC² MIN	57.3°/SEC²
RATE:		1.1 IN/SEC MIN	3°/SEC

13 OMS/TVC & DR

SIGNATURE		DATE	NATIONAL AERONAUTICS AND SPACE ADMINISTRATION LYNDON B. JOHNSON SPACE CENTER HOUSTON, TEXAS
DSGN	L. BUCHANAN	7/24/79	
DR			
ENGR	E. LIEBMAN		OMS/TVC SIGNAL FLOW AND DRIVERS
ENGR	[signature]	9/27/96	
APP	[signature]	7/24/96	
APP	[signature]	7/16/96	SPACE SHUTTLE / DWG NO 9.13
CADS	J.A. Kimbler	7-27-96	ALL / PAGE SHEET 1 OF 1
LTR E	PCN 6		104.5 X 34

BASIC REV E-6

V43 H2500C L OMS PRI P ACTR POS -7 TO +7° 5 S/S → FA 1
V43 H2502C L OMS PRI Y ACTR POS -8 TO +8° 5 S/S → FA 1
V43 H2504C L OMS SEC P ACTR POS -7 TO +7° 1 S/S → FA 2
V43 H2506C L OMS SEC Y ACTR POS -8 TO +8° 1 S/S → FA 2

V43 H2550C R OMS PRI P ACTR POS -7 TO +7° 5 S/S → FA 4
V43 H2552C R OMS PRI Y ACTR POS -8 TO +8° 5 S/S → FA 4
V43 H2554C R OMS SEC P ACTR POS -7 TO +7° 1 S/S → FA 3
V43 H2556C R OMS SEC Y ACTR POS -8 TO +8° 1 S/S → FA 3

V43 K1016C L OMS PRI P ACTR CMD -7 TO +7° 5 S/S → FA 1
V43 K1018C L OMS PRI Y ACTR CMD -8 TO +8° 5 S/S → FA 1
V43 K1017C L OMS SEC P ACTR CMD -7 TO +7° 1 S/S → FA 2
V43 K1019C L OMS SEC Y ACTR CMD -8 TO +8° 1 S/S → FA 2

V43 K2016C R OMS PRI P ACTR CMD -7 TO +7° 5 S/S → FA 4
V43 K2018C R OMS PRI Y ACTR CMD -8 TO +8° 5 S/S → FA 4
V43 K2017C R OMS SEC P ACTR CMD -7 TO +7° 1 S/S → FA 3
V43 K2019C R OMS SEC Y ACTR CMD -8 TO +8° 1 S/S → FA 3

V43 K1020X L OMS ENG PRI ENA 1 1=ENA 1 S/S → FF 1
V43 K1021X L OMS ENG PRI ENA 2 1=ENA 1 S/S → FF 1
V43 K1023X L OMS ENG SEC ENA 1 1=ENA 1 S/S → FF 2
V43 K1024X L OMS ENG SEC ENA 2 1=ENA 1 S/S → FF 2

V43 K2020X R OMS ENG PRI ENA 1 1=ENA 1 S/S → FF 4
V43 K2021X R OMS ENG PRI ENA 2 1=ENA 1 S/S → FF 4
V43 K2023X R OMS ENG SEC ENA 1 1=ENA 1 S/S → FF 3
V43 K2024X R OMS ENG SEC ENA 2 1=ENA 1 S/S → FF 3

ACTUATOR POSITION → EMI FILTER
ACTUATOR COMMAND → EMI FILT

POSITION XDUCER DEMOD
SYNCHRO DEMOD N
SYNCHRO DEMOD M
SYNCHRO DEMOD P
100 KHZ 8 VAC
13 VAC 3.5 KHZ
M M P
SYNCHRO DECODER

HYSTERESIS SWITCHES/OPTICAL ISOL
6.2V
+ERROR +.06°+.4°
-ERROR -.4°+-.06°

HTR PWR +28 VDC
MONO MV 3 µSEC
8 SEC TIMER
EXTEND CMD
RETRACT CMD

EXTEND
RETRACT
DIRECTION SENSOR
HIGH-SIDE CURRENT SHUT-DOWN
TOTAL CURRENT SHUT-DOWN

MOTOR DRIVERS
+28 VDC
Z
E
STATOR
ROTOR N S
BRUSHLESS DC MOTOR

PRIMARY MOTOR
REDUCTION GEARS
NO-BACK DEVICE
JACK-SCREW
SECONDARY SYNCHRO

PITCH/YAW SECONDARY PWR SUPPLY
PITCH/YAW PRIMARY PWR SUPPLY
SYNCHRO OSC
28VDC MOTOR DRIVE POWER
EMI FILTER
INV REG
INV FREQ REF

8 VAC SYNCHRO/EXCIT DEMOD 100 KHZ 8V P. P.
13 VAC LVDT DEMOD DRIVE 3.5 KHZ
-12 VDC ISOLATED
+12 VDC ISOLATED
-12 VDC LOGIC
+12 VDC LOGIC
5 VAC LVDT EXCIT 3.5 KHZ

RPC 10A
$V_{MNA(B)\ APC(1,2)}$
$V_{MNC(A)\ APC(3,1)}$
$V_{MNA\ APC1}$ 3A
$V_{MNC\ APC3}$ 3A
$V_{MNB\ APC2}$ 3A
$V_{MNA\ APC1}$ 3A

VELOCITY CONTROL
MONO MV 100 MS
TRIG TIMER 5MS
MONO MV 30 MS
CLR

CURRENT LIMITERS (10 AMPS)
6.2V
CURRENT SENSOR

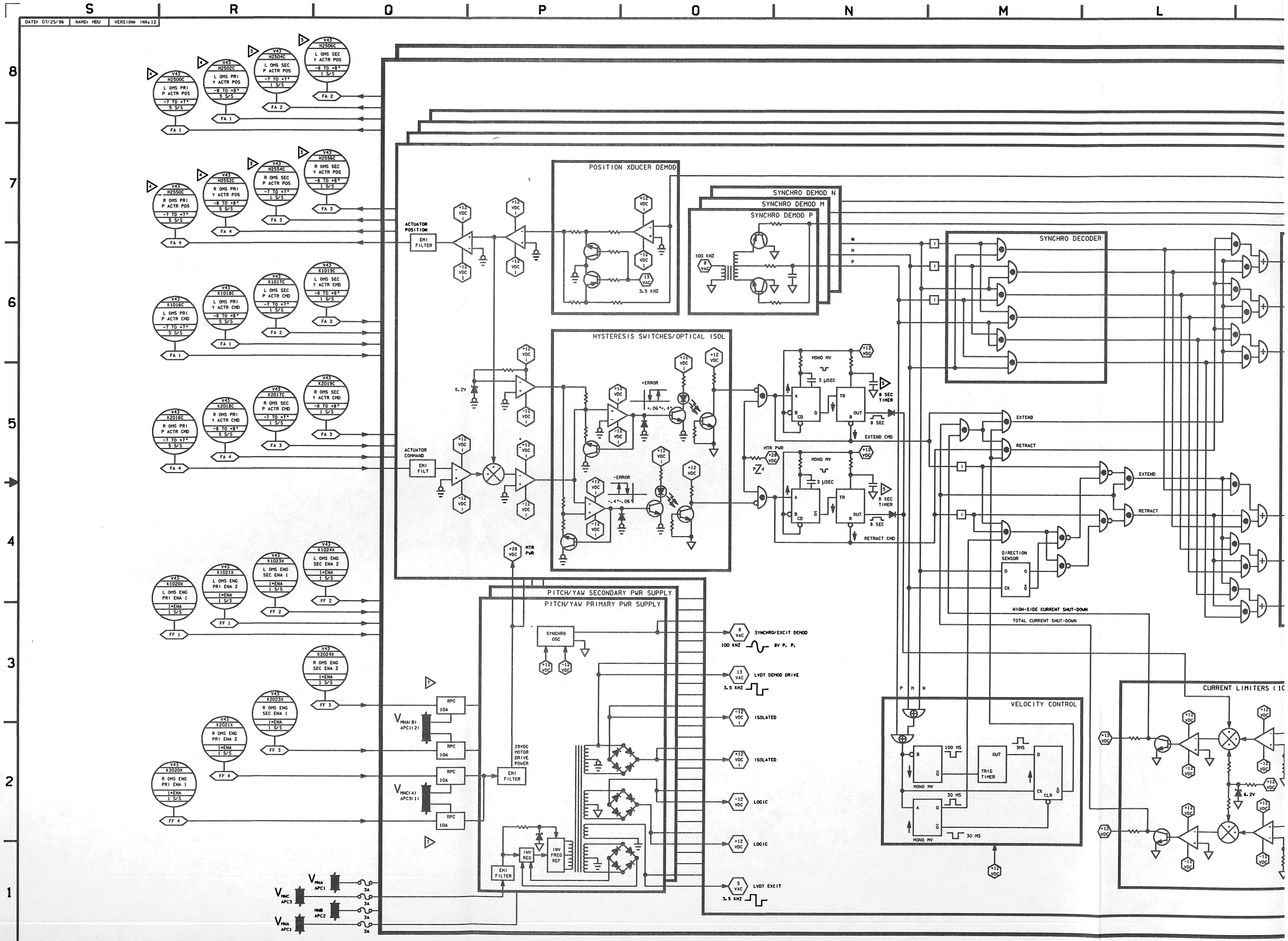
DATE: 07/25/96
NAME: MDU
VERSION: INK:12
POSITION XDUCER DEMOD
SYNCHRO DEMOD N
SYNCHRO DEMOD M
SYNCHRO DEMOD P
SYNCHRO DECODER
HYSTERESIS SWITCHES/OPTICAL ISOL
PITCH/YAW SECONDARY PWR SUPPLY
PITCH/YAW PRIMARY PWR SUPPLY
VELOCITY CONTROL
CURRENT LIMITERS
ACTUATOR POSITION
ACTUATOR COMMAND
EMI FILTER
EXTEND
RETRACT
DIRECTION SENSOR
HIGH-SIDE CURRENT SHUT-DOWN
TOTAL CURRENT SHUT-DOWN
SYNCHRO/EXCIT DEMOD
LVDT DEMOD DRIVE
ISOLATED
LOGIC
LVDT EXCIT
28VDC MOTOR DRIVE POWER
SYNCHRO OSC
MONO MV
TRIG TIMER
MTR PWR

BASIC REV E-6

DATE: 08/25/90	NAME: MDU	VERSION: INIT 2
DATE: 02/12/96	NAME: LAM	VERSION: BPT 8
DATE: 02/15/96	NAME: BJB	VERSION: INIT 3

RIGHT SRB TILT ACTUATOR
RIGHT SRB ROCK ACTUATOR
LEFT SRB TILT ACTUATOR
LEFT SRB ROCK ACTUATOR
CHANNELS 1 AND 2
CHANNELS 3 AND 4

SRB TVC HYDRAULIC SWITCHING VALVE ASSIGNMENT

	LEFT SRB		RIGHT SRB	
	PRI	SEC	PRI	SEC
ROCK	HYD SYS A	HYD SYS B	HYD SYS A	HYD SYS B
TILT	HYD SYS B	HYD SYS A	HYD SYS B	HYD SYS A

SRB ENGINE PIVOT LOCATION

	LEFT	RIGHT
X_0	1665.5	1665.5
Y_0	-250.5	250.5
Z_0	63.5	63.5

DYNAMIC PRESSURE FEEDBACK
MECHANICAL POSITION FEEDBACK LINKAGE
MECHANICAL POSITION FEEDBACK SPRING CAGE ASSEMBLY
SERVOVALVE 3(1)
SERVO VALVE 4 (2)
15μ
LVDT
BYPASS VALVE
SECONDARY ΔP
POWER VALVE FEEDBACK WIRE
POWER VALVE
LOCK VALVE
PRIMARY ΔP
DEVELOPMENT FLIGHT INSTRUMENTATION
HYD SWITCHING VALVE
PRI
SEC
PRI R
SEC R
TRANSIENT LOAD RELIEF MECHANISM
SPRING
STRAIN GAGE POSITION TRANSDUCER
EXTEND
LINEAR SINGLE BALANCED ACTUATOR

KICK RING
ACTUATOR OUTBOARD SUPPORT BRACKETS
ACTUATOR INBOARD SUPPORT BRACKETS
SRB NOZZLE ATTACHED BY FLEX BEARING
COMPLIANCE RING NOZZLE
ELECTRICAL BONDING STRAP
ROTATED 45° CW.
NOZZLE SEVERENCE PYROTECHNICS
SRB GIMBAL ACTUATOR

SRB SEC ΔP

1. THIS TABLE PROVIDES ACTUATOR PISTON STROKE (SHOWN IN INCHES) CORRESPONDING GIMBAL DEFLECTION (IN DEGREES) AND DRIVER OUTPUT (MA) FOR CENTER OF STROKE AND BOTH POSITIVE AND NEGATIVE SOFTWARE LIMITS
2. THE SRB TVC POSITION TRANSDUCERS ARE POWERED BY THE A4 SIGNAL CONDITIONER IN THE SRB POWER DISTRIBUTION SYSTEM. THE A4 SIGNAL CONDITIONER IN TURN IS REDUNDANTLY POWERED BY MNA AND MNB ORBITER MAIN BUSES. HOWEVER THE TWO SRB MAIN BUSES A AND B RECEIVE POWER FROM MNA APC 1 AND MNB APC2 RESPECTIVELY (REF SSSH DWG 2.2 SHEET 2, F, 6 Z 2.1)
3. THE DEVELOPMENT FLIGHT INSTRUMENTATION (DFI) IS NOT CURRENTLY BEING USED
4. RESERVED
5. ANGLE ROTATIONS ARE MEASURED FROM ORBITER BODY AXIS TO NULL POSITION
6. SSME PRIMARY SYSTEM DRIVES THE ACTUATOR UNTIL THE PRIMARY SYSTEM PRESSURE DROPS BELOW 1200 - 1500 PSI
13. MINIMUM ME GIMBAL RATE 10 DEG/SEC
12. HYD FLUID EXPANSION RATE 4 PER CENT/100 DEG F BY VOLUME
11. SRB LOCK VALVE HAS A BYPASS POSITION (NOT SHOWN ON DWG) THAT WHEN OPERATED BY GROUND CREWS, WILL INTERCONNECT ALL FOUR POWER VALVE AND ACTUATOR PORTS
10. CENTER, LEFT AND RIGHT ME'S ARE SOMETIMES CALLED ME'S 1, 2 AND 3 RESPECTIVELY
9. HYD SWITCHING VALVE WILL AUTOMATICALLY SWITCH TO THE SECONDARY POSITION WHEN THE PRIMARY PRESSURE DROPS TO LESS THAN 2050 PSIG 2150 PSIG AT ZERO FLOW
8. SRB TRANSIENT LOAD RELIEF MECH WILL ACTUATE AT HYD PRESSURE GREATER THAN 3600 PSID AND BYPASS FLOW WILL BE PROPORTIONAL TO THE DIFFERENTIAL PRESSURE ABOVE 3600 PSIG
7. ALL SPRING LOADED DEVICES ARE SHOWN IN THE DE-ENERGIZED AND UNPRESSURIZED POSITION. HYDRAULIC RETURN LINES ARE IDENTIFIED WITH AN 'R'. SOURCE PRESS IS ≈ 3000 PSIG
6. BYPASS VALVE SPOOL PRE-LOAD RETURN SPRING IS EQUAL TO 300 PSI
5. SRB LOCK VALVE ACTUATES TO THE LOCKED POSITION WHEN THE SYSTEM PRESSURE FALLS TO BETWEEN 1000 TO 600 PSIG. THE VALVE ACTUATES TO THE UNLOCKED POSITION WHEN SYSTEM PRESSURE IS GREATER THAN 1000 PSIG
4. THE LOCK VALVE FOR THE ME'S SHALL ACTUATE TO THE LOCKED POSITION WHEN SYSTEM PRESSURE IS 600 PLUS 100, MINUS 0.0 PSID. THE VALVE SHALL ACTUATE TO THE UNLOCKED POSITION WHEN SYSTEM PRESSURE IS NO GREATER THAN 2000 PSIG
3. THE FORCE LIMITER SHALL LIMIT THE INTERNAL CYLINDER PRESSURE TO 4050 PSIG
2. FILTER CONTAINS A VISUAL DIFFERENTIAL PRESSURE INDICATOR
NOTES: 1. A PLUS CURRENT TO THE ELECTRO-HYDRAULIC SERVO VALVES WILL CAUSE THE ACTUATOR TO EXTEND AND THE + ⟶ SHOW THE INITIAL MOVEMENT DIRECTION OF THE HYD SPOOLS AND MECHANICAL LINKAGE

14 ATVC ACTRS

SIGNATURE		DATE	NATIONAL AERONAUTICS AND SPACE ADMINISTRATION LYNDON B. JOHNSON SPACE CENTER HOUSTON, TEXAS
DSGN	L. M. BUCHANAN	12/17/75	
DR			ME AND SRB TVC ACTUATORS
ENGR	D. MARQUETTE		
ENGR	[illegible]	2/29/96	
APP	[illegible]	4/26/96	
APP	[illegible]	7/3/96	
CADS	S.K. Reinhiller	7-15-96	SPACE SHUTTLE / ALL / DWG NO 9.14
LTR E	PCN 6		126.5 X 34 / PAGE / SHEET 1 OF 1

BASIC REV E-6

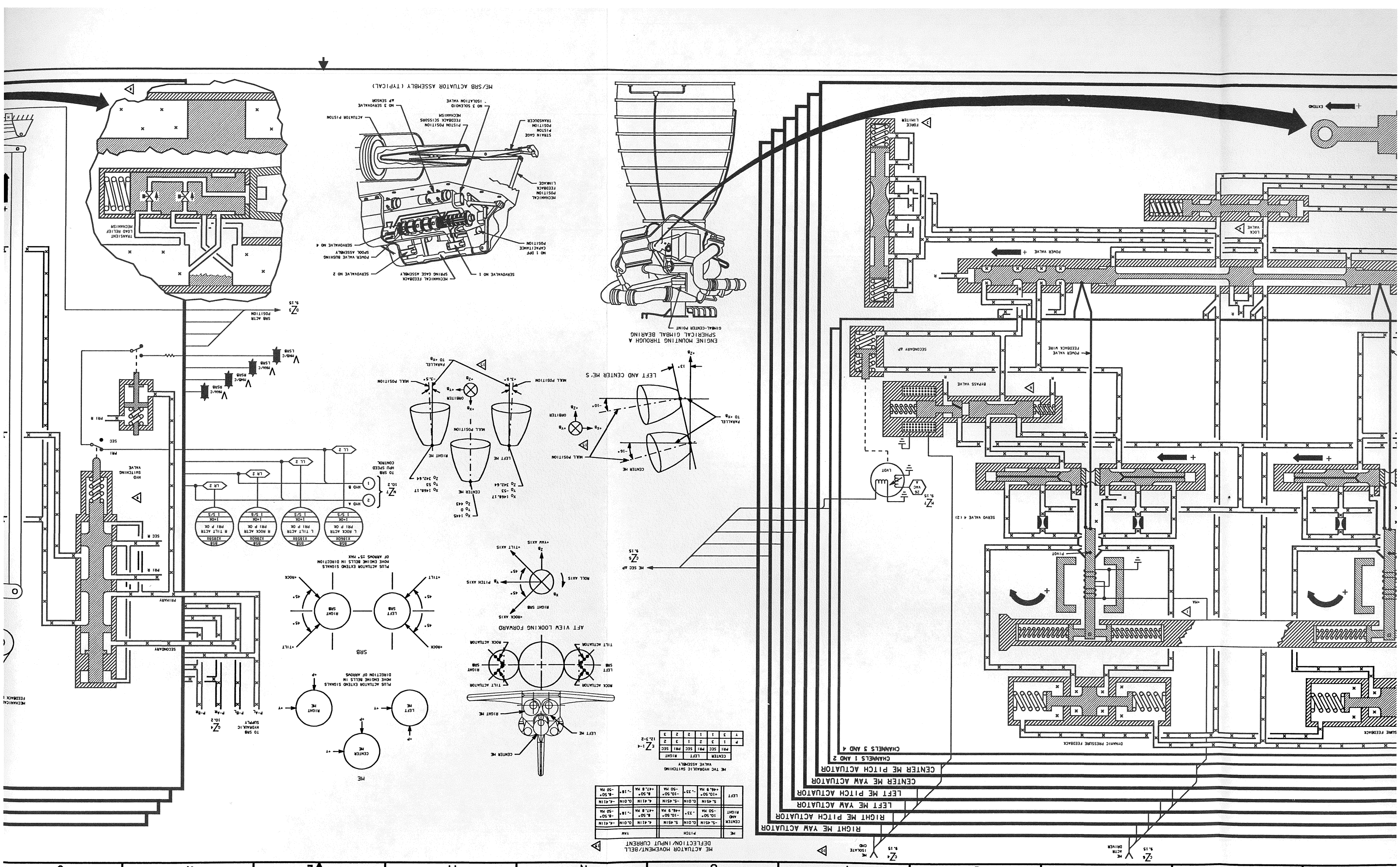
RIGHT ME YAW ACTUATOR
RIGHT ME PITCH ACTUATOR
LEFT ME YAW ACTUATOR
LEFT ME PITCH ACTUATOR
CENTER ME YAW ACTUATOR
CENTER ME PITCH ACTUATOR
CHANNELS 1 AND 2
CHANNELS 3 AND 4
DYNAMIC PRESSURE FEEDBACK
SERVO VALVE 4 (2)
SECONDARY AP
BYPASS VALVE
POWER VALVE FEEDBACK WIRE
POWER VALVE
LOCK VALVE
FORCE LIMITER
EXTEND
SAME FEEDBACK
ENGINE MOUNTING THROUGH A SPHERICAL GIMBAL BEARING
GIMBAL-CENTER POINT
ME/SRB ACTUATOR ASSEMBLY (TYPICAL)
ACTUATOR PISTON
NO 3 SERVOVALVE AP SENSOR
NO 3 SOLENOID ISOLATION VALVE
PISTON POSITION FEEDBACK SCISSORS MECHANISM
STRAIN GAGE PISTON POSITION TRANSDUCER
MECHANICAL POSITION FEEDBACK LINKAGE
NO 1 DPF CAPACITANCE POSITION
SERVOVALVE NO 4
POWER VALVE BUSHING SPOOL ASSEMBLY
SERVOVALVE NO 2
MECHANICAL FEEDBACK SPRING GAGE ASSEMBLY
SERVOVALVE NO 1
TRANSIENT LOAD RELIEF MECHANISM
SRB ACTR POSITION
PLUS ACTUATOR EXTEND SIGNALS MOVE ENGINE BELLS IN DIRECTION OF ARROWS
SRB
PLUS ACTUATOR EXTEND SIGNALS MOVE ENGINE BELLS IN DIRECTION OF ARROWS
ME
LEFT AND CENTER ME'S
MAIL POSITION
ORBITER
PARALLEL TO +ZB
CENTER ME
RIGHT ME
LEFT ME
AFT VIEW LOOKING FORWARD
TILT ACTUATOR
ROCK ACTUATOR
HE SEC AP
HE TVC HYDRAULIC SWITCHING VALVE ASSEMBLY
HE ACTUATOR MOVEMENT/BELL DEFLECTION/ INPUT CURRENT
PITCH
YAW
CENTER AND RIGHT
LEFT
HYD SPEED CONTROL
TO SRB HYDRAULIC SUPPLY
SECONDARY
PRIMARY
SEC R
SEC
PRI R
PRI
VALVE
SWITCHING
MECHANICAL FEEDBACK
SRB ACTR POSITION
LOCATE CMD
ME DRIVER
ME ACTR
PIVOT
HPA
LVDT
VAC
26
SAME FEEDBACK

DATE= 02/15/96 | MANE= BJB | VERSION= INR=3

W V U T S R Q P O N

8 7 6 5 4 3 2 1

RIGHT ME YAW ACTUATOR
RIGHT ME PITCH ACTUATOR
LEFT ME YAW ACTUATOR
LEFT ME PITCH ACTUATOR
CENTER ME YAW ACTUATOR
CENTER ME PITCH ACTUATOR
CHANNELS 1 AND 2
CHANNELS 3 AND 4

ME SEC ΔP Z5 9.15 | Z4 9.15 ME ISOLATE CMD | Z6 9.15 ME ACTR DRIVER

DYNAMIC PRESSURE FEEDBACK

MECHANICAL POSITION FEEDBACK LINKAGE

MECHANICAL POSITION FEEDBACK SPRING CAGE ASSY

+MA

PIVOT

SERVOVALVE 3(1)

SERVO VALVE 4 (2)

A PIND

15μ

P TO HYD SWITCH VALVE Z4 12.3-2

R TO HYD SWITCH VALVE Z4 12.3-2

Z7 9.15 26 VAC LVDT

BYPASS VALVE

SECONDARY ΔP

POWER VALVE FEEDBACK WIRE

POWER VALVE

LOCK VALVE

FORCE LIMITER

SPRING

STRAIN GAGE PISTON POSITION TRANSDUCER (DSC OA1 PROVIDES POWER TO THE TRANSDUCERS)

LINEAR SINGLE BALANCED ACTUATOR

EXTEND

Z7 9.15 ACTUATOR POSITION

ME ACTUATOR MOVEMENT/BELL DEFLECTION/ INPUT CURRENT

ME	PITCH			YAW		
CENTER AND RIGHT	-5.45IN	0.0IN	5.45IN	4.41IN	0.0IN	-4.41IN
	10.50° -50 MA	.33°	-10.50° +46.9 MA	8.50° +47.8 MA	-.18°	-8.50° -50 MA
LEFT	5.45IN	0.0IN	-5.45IN	4.41IN	0.0IN	-4.41IN
	+10.50° +46.9 MA	-.33°	-10.50° -50 MA	8.50° +47.8 MA	-.18°	-8.50° -50 MA

ME TVC HYDRAULIC SWITCHING VALVE ASSEMBLY

	CENTER		LEFT		RIGHT	
	PRI	SEC	PRI	SEC	PRI	SEC
P	1	3	2	1	3	2
Y	3	1	1	2	2	3

E Z1-4 12.3-2

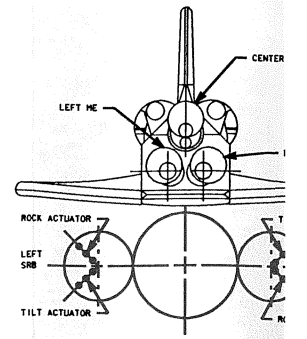

AFT VIEW LOOKING FORWARD

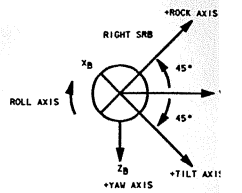

ME SEC ΔP Z5 9.15

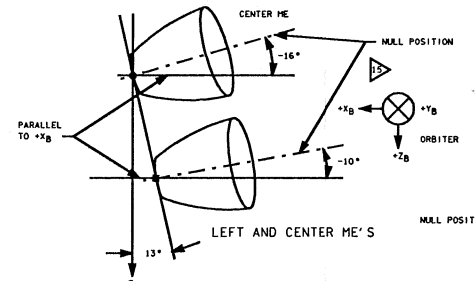

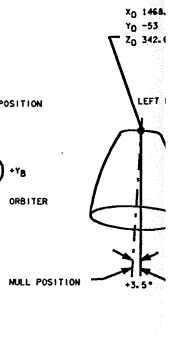

ENGINE MOUNTING THROUGH A SPHERICAL GIMBAL BEARING

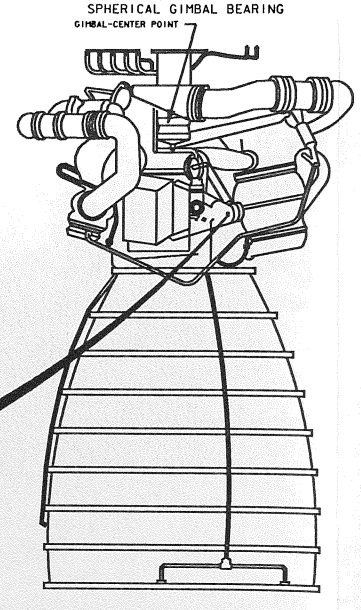

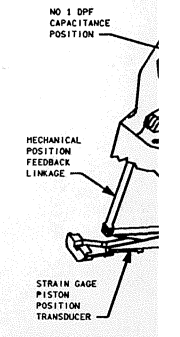

BASIC REV E-6

DATE:	NAME:	VERSION:
8/26/87	MAG	ING. 3
8/29/90	MDU	ING. 4
09/04/90	LAM	ING. 5

K J I H G F E D C B A

8 7 6 5 4 3 2 1

V58 P1286A LEFT ME Y SEC ΔP A -3042 TO +3042 PSID 25 S/S (P1287A) (P1288A) (P1289A)

V58 P1381A RIGHT ME P SEC ΔP A -3042 TO +3042 PSID 25 S/S (P1382A) (P1383A) (P1384A)

V58 P1386A RIGHT ME Y SEC ΔP A -3042 TO +3042 PSID 25 S/S (P1387A) (P1388A) (P1389A)

V79 H2150A CENTER ME P ACTR A DR +13.0 TO -13.05 DEG 5 S/S (H2153A) (H2156A) (H2159A)

V79 H2151A CENTER ME Y ACTR A DR -10.51 TO +10.57 DEG 5 S/S (H2154A) (H2157A) (H2160A)

V79 H2165A LEFT ME P ACTR A DR -13.0 TO +13.05 DEG 5 S/S (H2166A) (H2171A) (H2174A)

V79 H2166A LEFT ME Y ACTR A DR -10.51 TO +10.57 DEG 5 S/S (H2169A) (H2172A) (H2175A)

V79 H2180A RIGHT ME P ACTR A DR +13.0 TO -13.05 DEG 5 S/S (H2183A) (H2186A) (H2189A)

V79 H2181A RIGHT ME Y ACTR A DR -10.51 TO +10.57 DEG 5 S/S (H2184A) (H2187A) (H2190A)

ATVC 4 (CHANNEL 4)
ATVC 3 (CHANNEL 3)
ATVC 2 (CHANNEL 2)
ATVC 1 (CHANNEL 1)

RIGHT ME YAW DRIVER
RIGHT ME PITCH DRIVER
LEFT ME YAW DRIVER
LEFT ME PITCH DRIVER
CENTER ME YAW DRIVER
5 CENTER ME PITCH DRIVER (TYP)

DRIVER CIRCUIT (TYPICAL)

REDUNDANT CHANNEL EQUALIZATION

ADBAND GAIN +1175 PSI

LAG LIMITER GAIN +5.3V -5.3V

LAG NETWORK

4

EH VALVE DRIVER

GAIN LIMITER CKT +4V -4V

CURRENT DRIVER 53 MA MAX

1000 HZ NZ6

LO-PASS FILTER

DEMODE

ΔP FAULT DETECTION

FAULT TRIP CKT

PSI +2200 PSI

1=UP 0=DOWN

UP/DN INTEGRATOR

UP COUNT -120 MSEC
DN COUNT -240 MSEC

CLR

ISOLATE

FAULT LATCH S Q R Q̄

ΔP FAULT

ISOLATION VALVE DRIVER

PWR ISOLATION CIRCUIT

NZ6 +5 VDC

NZ7 +28 VDC 2

PHASE SPLITTER

50K HZ SQ WAVE OSC.

J Q CK K Q̄

DRIVER

FULL-WAVE CLIPPER

SD

ISOLATION VLV DRIVER

1000 HZ PRESENT
+15 VDC PRESENT
-15 VDC PRESENT
+8.5 VDC PRESENT
-8.5 VDC PRESENT
+5 VDC PRESENT

RIGHT SRB TILT DRIVER
RIGHT SRB ROCK DRIVER
LEFT SRB TILT DRIVER
LEFT SRB ROCK DRIVER

5

oZ1 +28 VDC 5

ISOLATION VALVE DRIVER

V79 H2110A L SRB ROCK ACTR A DR -6.35 TO +6.35 DEG 25 S/S (H2114A) (H2119A) (H2125A)

V79 H2111A L SRB TILT ACTR A DR -6.35 TO +6.35 DEG 25 S/S (H2115A) (H2120A) (H2126A)

V79 H2130A R SRB ROCK ACTR A DR -6.35 TO +6.35 DEG 25 S/S (H2135A) (H2140A) (H2145A)

V79 H2131A R SRB TILT ACTR A DR -6.35 TO +6.35 DEG 25 S/S (H2136A) (H2141A) (H2146A)

V58 H1150A CENTER ME Y ACTR POSN +8.48 TO -8.52 DEG 25 S/S

V58 H1250A LEFT ME Y ACTR POSN +8.48 TO -8.52 DEG 25 S/S

V58 H1350A RIGHT ME Y ACTR POSN +8.48 TO -8.52 DEG 25 S/S

V58 H1100A CENTER ME P ACTR POSN +10.48 TO -10.52 DEG 25 S/S

V58 H1200A LEFT ME P ACTR POSN +10.48 TO -10.52 DEG 25 S/S

V58 H1300A RIGHT ME P ACTR POSN +10.48 TO -10.52 DEG 25 S/S

ACTUATOR DRIVER

SEC ΔP FEEDBACK

ISOLATE COMMAND

RIGHT ME YAW ACTUATOR
RIGHT ME PITCH ACTUATOR
LEFT ME YAW ACTUATOR
LEFT ME PITCH ACTUATOR
CENTER ME YAW ACTUATOR
5 CENTER ME PITCH ACTUATOR

POSITION TRANSDUCER STRAIN GAUGE TYPE

TZ1 9.14

CHANNEL 4
CHANNEL 3
CHANNEL 2
CHANNEL 1

ELECTRO-HYDRAULIC VALVE (TYP)

TZ8 9.14 RZ8 9.14

SECONDARY ΔP (TYP)

UZ8 9.14

LVDT

26 VAC A

NZ7

NZ5 9.14

ISOLATION VALVE (TYP)

UZ8 9.14

PZ8 9.14

ACTUATOR DRIVER

SEC ΔP FEEDBACK

ISOLATE COMMAND

B58 H1150C L SRB ROCK ACTR POSN -5.0 TO +5.2 DEG 25 S/S

B58 H1151C L SRB TILT ACTR POSN +5.0 TO -5.2 DEG 25 S/S

LL 2

LR 2

B58 H2150C R SRB ROCK ACTR POSN +5.0 TO -5.2 DEG 25 S/S

B58 H2151C R SRB TILT ACTR POSN -5.0 TO +5.2 DEG 25 S/S

ORBITER SRB

RIGHT SRB TILT ACTUATOR
RIGHT SRB ROCK ACTUATOR
LEFT SRB TILT ACTUATOR
LEFT SRB ROCK ACTUATOR

POSITION TRANSDUCER STRAIN GAUGE TYPE

LZ3 9.14

CHANNEL 4
CHANNEL 3
CHANNEL 2
CHANNEL 1

ELECTRO-HYDRAULIC VALVE

EZ8 9.14 HZ8 9.14

SECONDARY ΔP

HZ8 9.14

26 VAC B

BZ6 9.14

ISOLATION VALVE

CZ8 9.14 HZ8 9.14

V72 X4550X FCS CHANNEL FAILURE 1HFAIL 1 S/S

FF 3

C&W ELECTRONICS

(AMBER) FCS CHANNEL

PNL F7

MNEMONIC	TITLE
V79X1170X	C ME P ACTR A FAIL
V79X1173X	C ME P ACTR B FAIL
V79X1176X	C ME P ACTR C FAIL
V79X1178X	C ME P ACTR D FAIL
V79X1171X	C ME Y ACTR A FAIL
V79X1174X	C ME Y ACTR B FAIL
V79X1177X	C ME Y ACTR C FAIL
V79X1179X	C ME Y ACTR D FAIL
V79X1270X	L ME P ACTR A FAIL
V79X1273X	L ME P ACTR B FAIL
V79X1276X	L ME P ACTR C FAIL
V79X1278X	L ME P ACTR D FAIL
V79X1271X	L ME Y ACTR A FAIL
V79X1274X	L ME Y ACTR B FAIL
V79X1277X	L ME Y ACTR C FAIL
V79X1279X	L ME Y ACTR D FAIL
V79X1370X	R ME P ACTR A FAIL
V79X1373X	R ME P ACTR B FAIL
V79X1376X	R ME P ACTR C FAIL
V79X1378X	R ME P ACTR D FAIL
V79X1371X	R ME Y ACTR A FAIL
V79X1374X	R ME Y ACTR B FAIL
V79X1377X	R ME Y ACTR C FAIL
V79X1379X	R ME Y ACTR D FAIL
V79X5101X	L SRB TILT ACT A FAIL
V79X5106X	L SRB TILT ACT B FAIL
V79X5111X	L SRB TILT ACT C FAIL
V79X5116X	L SRB TILT ACT D FAIL
V79X5100X	L SRB ROCK ACT A FAIL
V79X5105X	L SRB ROCK ACT B FAIL
V79X5110X	L SRB ROCK ACT C FAIL
V79X5115X	L SRB ROCK ACT D FAIL
V79X5151X	R SRB TILT ACT A FAIL
V79X5156X	R SRB TILT ACT B FAIL
V79X5161X	R SRB TILT ACT C FAIL
V79X5166X	R SRB TILT ACT D FAIL
V79X5150X	R SRB ROCK ACT A FAIL
V79X5155X	R SRB ROCK ACT B FAIL
V79X5160X	R SRB ROCK ACT C FAIL
V79X5165X	R SRB ROCK ACT D FAIL

13 WHEN AN FCS CHANNEL SWITCH IS MOVED BETWEEN ANY TWO POSITIONS (I.E., AUTO TO OVERRIDE, OVERRIDE TO AUTO, OR OFF TO AUTO) THE POWER TO THE AFFECTED CHANNEL WILL BE INTERRUPTED AND THE CHANNEL WILL BE BYPASSED (FAIL MODE) FOR A MINIMUM TIME DURATION OF 210 MSEC TO A MAXIMUM TIME DURATION OF 520 MSEC DUE TO THE BREAK-BEFORE-MAKE SWITCH CHARACTERISTICS. REF. RI INTERNAL LETTER 283-220-86-009 "EFFECTS OF THE BREAK-BEFORE-MAKE DESIGN OF THE RCS CHANNEL SWITCHES"

10. RELATED FAILURE PARAMETERS ON DRAWING 9.11, AERO SURFACE SIGNAL FLOW

9. RESERVED

7 AS 25 S/S SAMPLE RATE FOR ACTUATOR A DRIVERS. ALL OTHERS AT 5 S/S

7 ONLY ACTUATOR A COMMANDS ARE DOWNLISTED

6 CENTER=MPS 1, LEFT=MPS 2, RIGHT=MPS 3

5 SRB DRIVER CIRCUIT IDENTICAL TO MPS EXCEPT ISOLATION VALVE DRIVER PWR AS SHOWN

4 REDUNDANT CHANNEL EQUILIZATION PROVIDES FEEDBACK OUT OF PHASE WITH POSITION CMD. THIS WILL NULL CHANNEL BIAS WHEN ΔP > 1175 PSI. THE LAG LIMITER INHIBITS THIS FEEDBACK WHEN ΔP FAULT DETECTION RESPONDS TO FAILURES

3 ISOLATION VALVE DRIVER OUTPUT=0 VOLTS NORMALLY, 28 VOLTS TO ISOLATE

2 DURING A POWER UP THE OUTPUT IS A 20 MSEC LOGIC ONE PULSE, NORMALLY LOGIC ZERO OR A CONTINUOUS LOGIC ONE OUTPUT WHEN BELOW THE TRIP LEVEL 4.425 VDC

NOTES: 1 MDM SIGNAL (BYPASS OR RESET) MUST BE PRESENT CONTINUOUSLY FOR AT LEAST 120 MSEC IN ORDER TO BE SENSED AS A VALID COMMAND

15 ASC TVC

SIGNATURE	DATE	NATIONAL AERONAUTICS AND SPACE ADMINISTRATION LYNDON B. JOHNSON SPACE CENTER HOUSTON, TEXAS
DSGN Judith B Heitig		
DR		
ENGR D.J. GRUBER	8/17/90	ME & SRB TVC SIGNAL FLOW
ENGR	9/7/90	
APP	9/10/90	
APP	9/10/90	SPACE SHUTTLE / DWG NO 9.15
OMNIPLAN S/C Caldwell	9/7/90	ALL
LTR E PCN		126.5 X 34 PAGE SHEET 1 OF 1

BASIC REV E

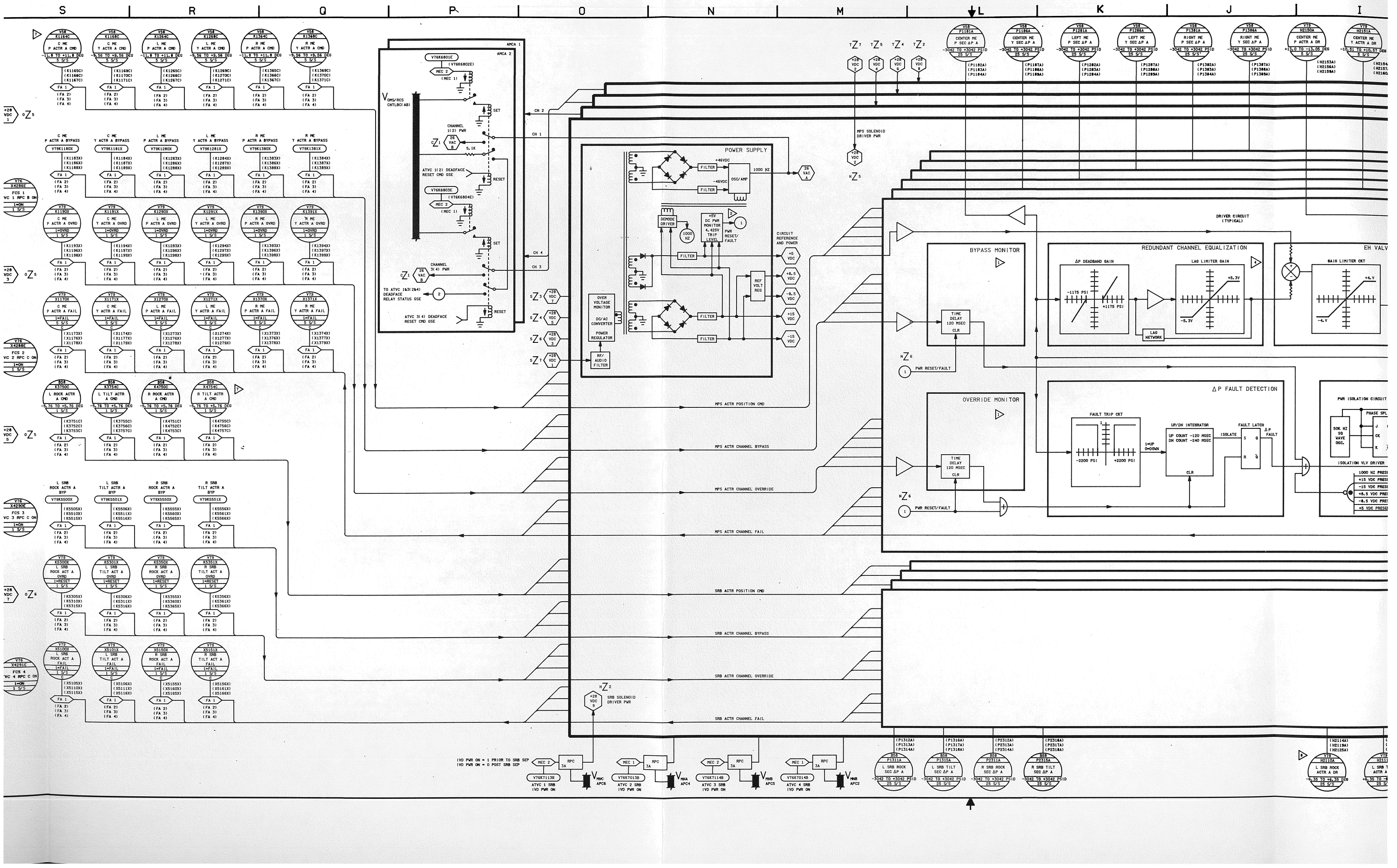

S
R
Q
P
O
N
M
L
K
J
I
AMCA 1
AMCA 2
POWER SUPPLY
OSC/AMP
FILTER
DEMODE DRIVER
OVER VOLTAGE MONITOR
DC/AC CONVERTER
POWER REGULATOR
RF/ AUDIO FILTER
REF VOLT REG
CIRCUIT REFERENCE AND POWER
MPS SOLENOID DRIVER PWR
MPS ACTR POSITION CMD
MPS ACTR CHANNEL BYPASS
MPS ACTR CHANNEL OVERRIDE
MPS ACTR CHANNEL FAIL
SRB ACTR POSITION CMD
SRB ACTR CHANNEL BYPASS
SRB ACTR CHANNEL OVERRIDE
SRB ACTR CHANNEL FAIL
SRB SOLENOID DRIVER PWR
BYPASS MONITOR
OVERRIDE MONITOR
TIME DELAY 120 MSEC
PWR RESET/FAULT
REDUNDANT CHANNEL EQUALIZATION
ΔP DEADBAND GAIN
LAG LIMITER GAIN
LAG NETWORK
GAIN LIMITER CKT
DRIVER CIRCUIT (TYPICAL)
ΔP FAULT DETECTION
FAULT TRIP CKT
UP/DN INTEGRATOR
FAULT LATCH
ISOLATE
ΔP FAULT
PWR ISOLATION CIRCUIT
ISOLATION VLV DRIVER
IVD PWR ON = 1 PRIOR TO SRB SEP
IVD PWR ON = 0 POST SRB SEP

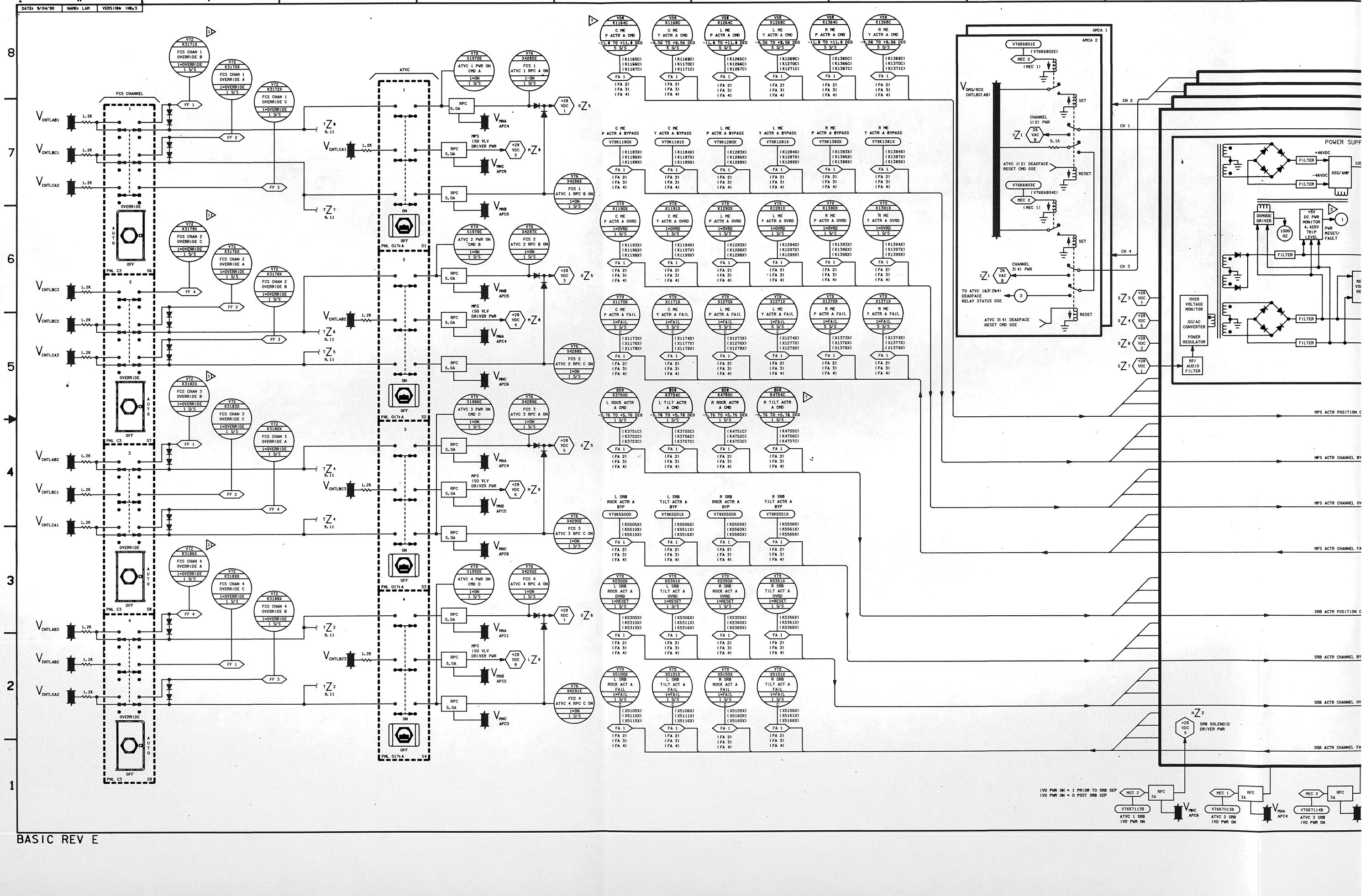
DATE= 9/04/90
NAME= LAM
VERSION= INK=5
W V U T S R Q P O N
8 7 6 5 4 3 2 1
FCS CHANNEL
ATVC
OVERRIDE
AUTO
OFF
PNL C3
PNL 017A
V72 K3171X FCS CHAN 1 OVERRIDE B
V72 K3170X FCS CHAN 1 OVERRIDE A
V72 K3172X FCS CHAN 1 OVERRIDE C
V72 K3179X FCS CHAN 2 OVERRIDE C
V72 K3176X FCS CHAN 2 OVERRIDE A
V72 K3178X FCS CHAN 2 OVERRIDE B
V72 K3182X FCS CHAN 3 OVERRIDE B
V72 K3183X FCS CHAN 3 OVERRIDE C
V72 K3180X FCS CHAN 3 OVERRIDE A
V72 K3186X FCS CHAN 4 OVERRIDE A
V72 K3189X FCS CHAN 4 OVERRIDE C
V72 K3188X FCS CHAN 4 OVERRIDE B
1=OVERRIDE 1 S/S
FF 1
FF 2
FF 3
FF 4
V79 S1970E ATVC 1 PWR ON CMD A
V76 X4285E FCS 1 ATVC 1 RPC A ON
V76 X4286E FCS 1 ATVC 1 RPC B ON
V79 S1978E ATVC 2 PWR ON CMD B
V76 X4287E FCS 2 ATVC 2 RPC B ON
V76 X4288E FCS 2 ATVC 2 RPC C ON
V79 S1986E ATVC 3 PWR ON CMD C
V76 X4289E FCS 3 ATVC 3 RPC A ON
V76 X4290E FCS 3 ATVC 3 RPC C ON
V79 S1992E ATVC 4 PWR ON CMD D
V76 X4292E FCS 4 ATVC 4 RPC A ON
V76 X4291E FCS 4 ATVC 4 RPC C ON
1=ON 1 S/S
RPC 5.0A
MPS ISO VLV DRIVER PWR
+28 VDC 1
+28 VDC 2
+28 VDC 3
+28 VDC 4
+28 VDC 5
+28 VDC 6
+28 VDC 7
+28 VDC 8
V_MNA APC4
V_MNB APC5
V_MNC APC6
V_MNA APC1
V_MNB APC2
V_MNC APC3
V_CNTLAB1 1.2K
V_CNTLBC1 1.2K
V_CNTLCA2 1.2K
V_CNTLBC3 1.2K
V_CNTLAB2 1.2K
V_CNTLCA1 1.2K
V_CNTLAB3 1.2K
V_CNTLBC2 1.2K
V_CNTLCA3 1.2K
V_CNTLAB2 1.2K
V_CNTLBC1 1.2K
V_CNTLCA1 1.2K
V_CNTLAB3 1.2K
V_CNTLBC3 1.2K
V_CNTLCA2 1.2K
V58 K1164C C ME P ACTR A CMD
V58 K1168C C ME Y ACTR A CMD
V58 K1264C L ME P ACTR A CMD
V58 K1268C L ME Y ACTR A CMD
V58 K1364C R ME P ACTR A CMD
V58 K1368C R ME Y ACTR A CMD
-11.8 TO +11.8 DEG
-5.76 TO +5.76 DEG
5 S/S
(K1165C) (K1166C) (K1167C)
(K1169C) (K1170C) (K1171C)
(K1265C) (K1266C) (K1267C)
(K1269C) (K1270C) (K1271C)
(K1365C) (K1366C) (K1367C)
(K1369C) (K1370C) (K1371C)
FA 1
(FA 2) (FA 3) (FA 4)
V79K1180X C ME P ACTR A BYPASS
V79K1181X C ME Y ACTR A BYPASS
V79K1280X L ME P ACTR A BYPASS
V79K1281X L ME Y ACTR A BYPASS
V79K1380X R ME P ACTR A BYPASS
V79K1381X R ME Y ACTR A BYPASS
(K1183X) (K1186X) (K1188X)
(K1184X) (K1187X) (K1189X)
(K1283X) (K1286X) (K1288X)
(K1284X) (K1287X) (K1289X)
(K1383X) (K1386X) (K1388X)
(K1384X) (K1387X) (K1389X)
V79 K1190X C ME P ACTR A OVRD
V79 K1191X C ME Y ACTR A OVRD
V79 K1290X L ME P ACTR A OVRD
V79 K1291X L ME Y ACTR A OVRD
V79 K1390X R ME P ACTR A OVRD
V79 K1391X R ME Y ACTR A OVRD
1=OVRD 1 S/S
(K1193X) (K1196X) (K1198X)
(K1194X) (K1197X) (K1199X)
(K1293X) (K1296X) (K1298X)
(K1294X) (K1297X) (K1299X)
(K1393X) (K1396X) (K1398X)
(K1394X) (K1397X) (K1399X)
V79 X1170X C ME P ACTR A FAIL
V79 X1171X C ME Y ACTR A FAIL
V79 X1270X L ME P ACTR A FAIL
V79 X1271X L ME Y ACTR A FAIL
V79 X1370X R ME P ACTR A FAIL
V79 X1371X R ME Y ACTR A FAIL
1=FAIL 5 S/S C
(X1173X) (X1176X) (X1178X)
(X1174X) (X1177X) (X1179X)
(X1273X) (X1276X) (X1278X)
(X1274X) (X1277X) (X1279X)
(X1373X) (X1376X) (X1378X)
(X1374X) (X1377X) (X1379X)
B58 K3750C L ROCK ACTR A CMD
B58 K3754C L TILT ACTR A CMD
B58 K4750C R ROCK ACTR A CMD
B58 K4754C R TILT ACTR A CMD
(X3751C) (X3752C) (X3753C)
(X3755C) (X3756C) (X3757C)
(X4751C) (X4752C) (X4753C)
(X4755C) (X4756C) (X4757C)
L SRB ROCK ACTR A BYP
L SRB TILT ACTR A BYP
R SRB ROCK ACTR A BYP
R SRB TILT ACTR A BYP
V79K5500X
V79K5501X
V79K5550X
V79K5551X
(K5505X) (K5510X) (K5515X)
(K5506X) (K5511X) (K5516X)
(K5555X) (K5560X) (K5565X)
(K5556X) (K5561X) (K5566X)
V79 K5300X L SRB ROCK ACT A OVRD
V79 K5301X L SRB TILT ACT A OVRD
V79 K5350X R SRB ROCK ACT A OVRD
V79 K5351X R SRB TILT ACT A OVRD
1=RESET 1 S/S
(K5305X) (K5310X) (K5315X)
(K5306X) (K5311X) (K5316X)
(K5355X) (K5360X) (K5365X)
(K5356X) (K5361X) (K5366X)
V79 X5100X L SRB ROCK ACT A FAIL
V79 X5101X L SRB TILT ACT A FAIL
V79 X5150X R SRB ROCK ACT A FAIL
V79 X5151X R SRB TILT ACT A FAIL
1=FAIL 1 S/S C
(X5105X) (X5110X) (X5115X)
(X5106X) (X5111X) (X5116X)
(X5155X) (X5160X) (X5165X)
(X5156X) (X5161X) (X5166X)
AMCA 1
AMCA 2
V76K6801E (V76K6802E) MEC 2 (MEC 1)
V76K6803E (V76K6804E) MEC 2 (MEC 1)
V_OMS/RCS CNTLBC(AB)
CHANNEL 1(2) PWR
CHANNEL 3(4) PWR
26 VAC B
5.1K
SET
RESET
ATVC 1(2) DEADFACE RESET CMD GSE
ATVC 3(4) DEADFACE RESET CMD GSE
TO ATVC 1&3(2&4) DEADFACE RELAY STATUS GSE
CH 1
CH 2
CH 3
CH 4
POWER SUPP
+46VDC
-46VDC
FILTER
OSC/AMP
DEMODE DRIVER
1000 HZ
+5V DC PWR MONITOR 4.425V TRIP LEVEL
PWR RESET/ FAULT
OVER VOLTAGE MONITOR
DC/AC CONVERTER
POWER REGULATOR
RF/ AUDIO FILTER
MPS ACTR POSITION C
MPS ACTR CHANNEL BY
MPS ACTR CHANNEL OV
MPS ACTR CHANNEL FA
SRB ACTR POSITION C
SRB ACTR CHANNEL BY
SRB ACTR CHANNEL OV
SRB ACTR CHANNEL FA
SRB SOLENOID DRIVER PWR
IVD PWR ON = 1 PRIOR TO SRB SEP
IVD PWR ON = 0 POST SRB SEP
MEC 2
MEC 1
RPC 3A
V76K71138 ATVC 1 SRB IVD PWR ON
V76K70138 ATVC 2 SRB IVD PWR ON
V76K71148 ATVC 3 SRB IVD PWR ON
V_MNC APC6
V_MNA APC4

BASIC REV E

DATE: 05/04/90	NAME: BJT	VERSION: INR$_3$
DATE: 04/04/94	NAME: BJB	VERSION: BPT$_7$
DATE: 08/04/94	NAME: VSH	VERSION: INR$_4$

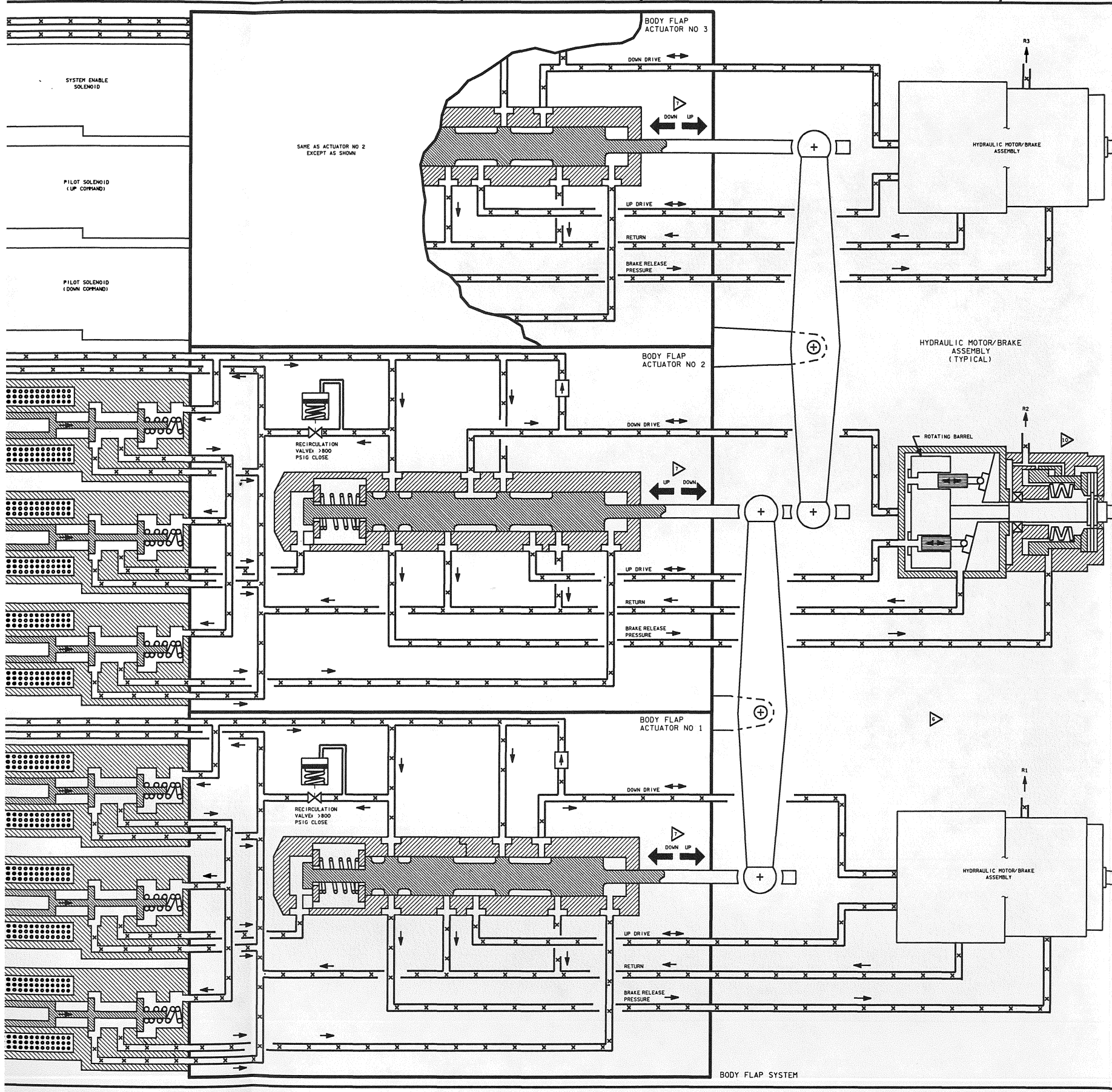

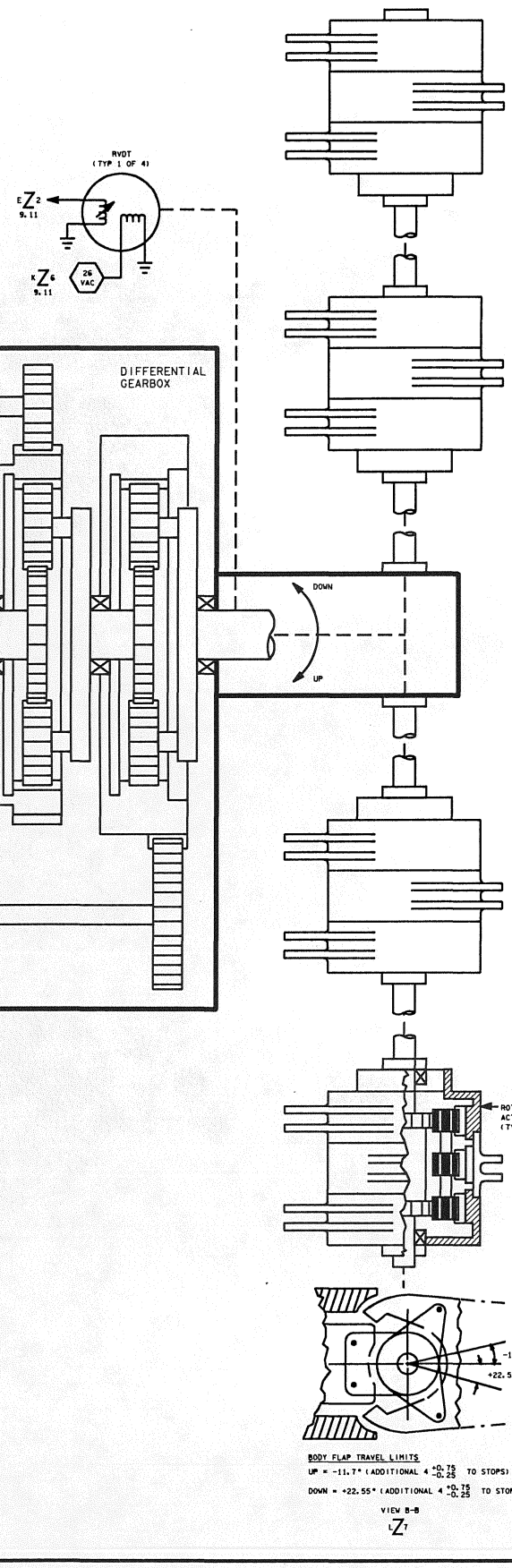

BODY FLAP TRAVEL LIMITS
UP = -11.7° (ADDITIONAL 4 $^{+0.75}_{-0.25}$ TO STOPS)
DOWN = +22.55° (ADDITIONAL 4 $^{+0.75}_{-0.25}$ TO STOPS)

VIEW B-B

▷D ORBITER HYDRAULIC SOURCE PRESSURE DISENGAGES THE HYDRAULIC BRAKE BY KEEPING THE BRAKE SHOES FROM CLAMPING DOWN ON THE DISC. LOSS OF HYDRAULIC PRESSURE ENGAGES THE BRAKE, PREVENTING THE DRIVESHAFT FROM ROTATING

▷A ASSIGNMENT OF HYDRAULICS SYSTEMS VIA THE SWITCHING VALVES IS AS FOLLOWS:

	ACTIVE	FIRST STANDBY	SECOND STANDBY
LOE	3	1	2
LIE	2	1	3
RIE	3	1	2
ROE	2	1	3
R/SB	1	2	3

REFERENCE DRAWING 12.2-1.2

▷A THE SECONDARY DIFFERENTIAL PRESSURE PHASING IS SUCH THAT A POSITIVE PRESSURE CAUSES A POSITIVE MOTION. ELEVON TRAILING EDGE DOWN, RUDDER TRAILING EDGE LEFT AND SPEEDBRAKE OPEN

▷A EACH BODY FLAP ACTUATOR HAS A LARGER AREA ON THE SPRING END VERSES THE SHAFT END (0.3068 TO 0.2313 SQUARE INCHES). THIS RESULTS IN CHANNELS 1 AND 3 UP AND 2 DOWN HAVE LARGER FORCE CAPABILITIES

▷A TWO HYDRAULIC MOTORS WILL PROVIDE THE DESIGN SPEC SURFACE RATE

▷A THE BYPASS VALVE WILL BE ACTIVATED TO CAUSE BYPASS OF A HYDRAULIC ACTUATOR CHANNEL WHENEVER THE Δ P ACROSS THE SERVO VALVE EXCEEDS ±2025 PSID. THE BYPASS VALVE SPOOL PRE-LOAD RETURN SPRING IS EQUAL TO 300 PSIG

4. P1, P2 AND P3 REPRESENT HIGH PRESSURE HYDRAULIC FLUID FROM THE BASIC HYDRAULIC SUPPLIES NUMBER 1, 2 AND 3 RESPECTIVELY; R1, R2 AND R3 REPRESENT RETURN PRESSURE TO THE BASIC HYDRAULIC SUPPLIES NUMBER 1, 2 AND 3 REPECTIVELY; P REPRESENTS HIGH PRESSURE HYDRAULIC FLUID FROM THE OUTPUT OF THE SWITCHING VALVES AND R REPRESENTS THE HYDRAULIC RETURN THROUGH THE SWITCHING VALVE (SEE DRAWING 12.3)

3. ALL SPRING LOADED DEVICES ARE SHOWN IN THE DE-ENERGIZED AND UNPRESSURED POSITION. HYDRAULIC RETURN LINES ARE IDENTIFIED WITH THE LETTER R, SOURCE PRESS IS 3000 PSIG

▷A FILTER CONTAINS A VISUAL DIFFERENTIAL PRESSURE INDICATOR

NOTES: ▷A A PLUS CURRENT TO THE ELECTRO-HYDRAULIC SERVO VALVES WILL CAUSE THE AERO-SURFACE TO DRIVE AS FOLLOWS:
ELEVONS-DOWN
RUDDER-LEFT
SPEEDBRAKE-OPEN
THE ← → SHOWS THE INITIAL DIRECTION OF HYD SPOOLS, ACTUATORS AND MOTOR

16 AERO ACTRS 1

SIGNATURE		DATE	NATIONAL AERONAUTICS AND SPACE ADMINISTRATION LYNDON B. JOHNSON SPACE CENTER HOUSTON, TEXAS	
DSGN	V. S. DOGGETT	7/2/80		
DR				
ENGR	L. STALLARD		AERO SURFACE ACTUATORS	
ENGR		8/5/94		
APP		8/8/94		
APP		8/8/94	SPACE SHUTTLE	DWG NO 9.16
CHG	D. K. Cordske	8-9-94	ALL	
LTR	E	PCN 4	121 X 34	PAGE SHEET 1 OF 2

BASIC REV E-4

T S R Q P O N M L K J

ROB ELV ACTUATOR
RIB ELV ACTUATOR
LIB ELV ACTUATOR
LOB ELV ACTUATOR
CHANNEL 1 AND 3
CHANNEL 2 AND 4

SERVO VALVE 1 (2)
SERVO VALVE 4 (3)
PIVOT
+MA
100μ
BYPASS VALVE
POWER VALVE FEEDBACK WIRE
LVDT
26 VAC
SECONDARY Δ P
POWER VALVE
ACTUATOR
PRIMARY Δ P
POSITION FEEDBACK
(TYP 1 OF 4)

ELEVON SYSTEM

HYDRAULIC MOTOR OPERATING PRINCIPLE
CCW
CW
INLET (FIXED)
ROTATING BARREL
SLIDING PAD
FIXED RAMP
(TYPICAL 1 OF 3)

RIGHT OUTBOARD ELEVON
RIGHT INBOARD ELEVON
LEFT INBOARD ELEVON
LEFT OUTBOARD ELEVON
VIEW A-A

ELEVON TRAVEL LIMITS
UP = +33° (+36.5° MAX)
DOWN = +18° (+21.5° MAX)

SYSTEM ENABLE SOLENOID
PILOT SOLENOID (UP CMD)
PILOT SOLENOID (UP COMMAND)
PILOT SOLENOID (DOWN CMD)
PILOT SOLENOID (DOWN COMMAND)
PILOT SOLENOID (UP COMMAND) (TYP 1 OF 3)
P3
R3
P2
R2
P1
R1

DATE: 08/04/94 | NAME: VSH | VERSION: INK.4

V U T S R Q P O N

8 7 6 5 4 3 2 1

ROB ELV ACTUATOR
RIB ELV ACTUATOR
LIB ELV ACTUATOR
LOB ELV ACTUATOR
CHANNEL 1 AND 3
CHANNEL 2 AND 4

SERVO VALVE 1 (2)
SERVO VALVE 4 (3)
PIVOT
TO HYD SWITCH VALVE
15 µ
100 µ
BYPASS VALVE
LVDT
26 VAC
POWER VALVE FEEDBACK WIRE
SECONDARY ΔP
POWER VALVE
ACTUATOR
POSITION FEEDBACK
PRIMARY ΔP
(TYP 1 OF 4)

ELEVON SYSTEM

BASIC REV E-4

DATE: 04/04/94	NAME: BJB	VERSION: BPT:6
DATE: 07/11/94	NAME: VSH	VERSION: BPT:7
DATE: 08/04/94	NAME: VSH	VERSION: INK:7

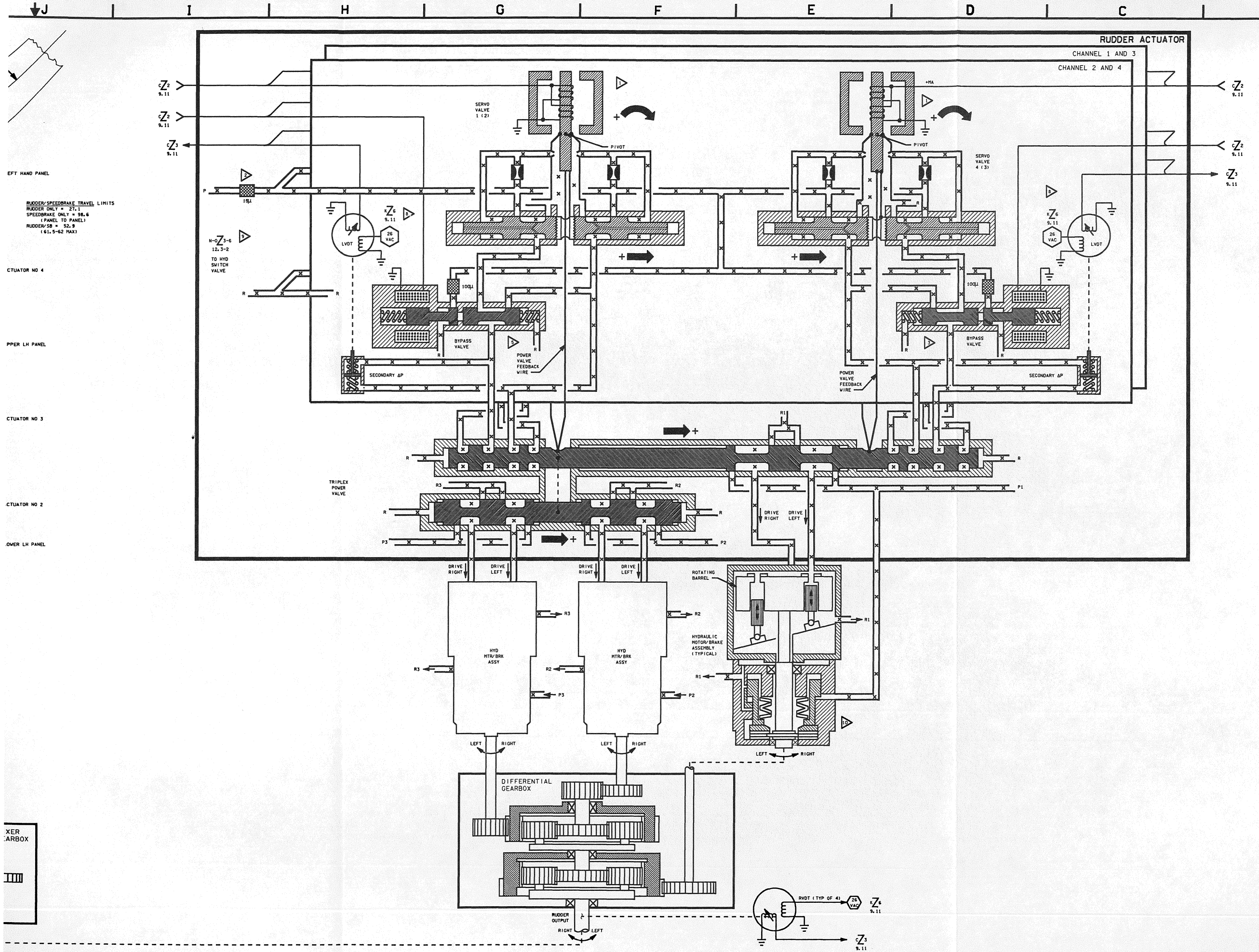

NOTE: SEE APPLICABLE NOTES ON SHEET 1

16 AERO ACTRS 2

SIGNATURE	DATE	NATIONAL AERONAUTICS AND SPACE ADMINISTRATION LYNDON B. JOHNSON SPACE CENTER HOUSTON, TEXAS
DSGN L. M. Buchanan	5/22/81	
DR L. M. Buchanan	5/22/81	AERO SURFACE ACTUATORS
ENGR L. STALLARD		
ENGR Laura Stallard	8/5/94	
APP Stephen A. Schaf	8/8/94	
APP John A. Hamman	8/8/94	SPACE SHUTTLE ALL — DWG NO 9.16
CADS S. K. Kinbrese	8-9-94	
LTR E — PCN 4		104.5 X 34 — PAGE — SHEET 2 OF 2

BASIC REV E-4

SPEEDBRAKE ACTUATOR

CHANNEL 1 AND 3

CHANNEL 2 AND 4

+MA

SERVO VALVE 1 (2)

SERVO VALVE 4 (3)

PIVOT

15µ

LVDT

26 VAC

100µ

BYPASS VALVE

SECONDARY ΔP

POWER VALVE FEEDBACK WIRE

R1 R2 R3 P1 P2 P3

DRIVE CLOSED

DRIVE OPEN

TRIPLEX POWER VALVE

ROTATING BARREL

HYDRAULIC MOTOR/BRAKE ASSEMBLY (TYPICAL)

HYD MTR/BRK ASSY

OPEN CLOSE

DIFFERENTIAL GEARBOX

SPEEDBRAKE OUTPUT

RVDT (TYP 1 OF 4)

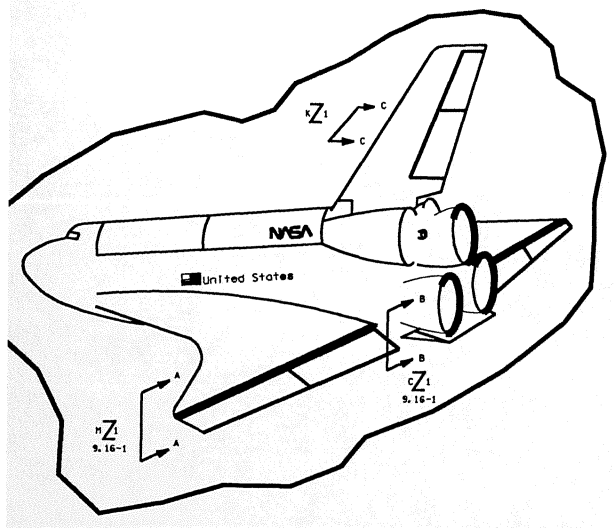

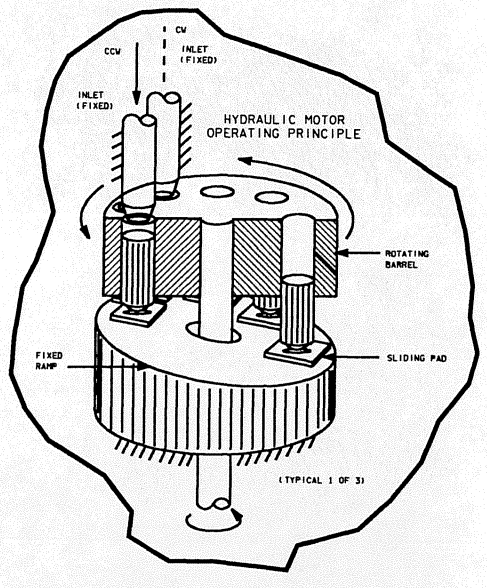

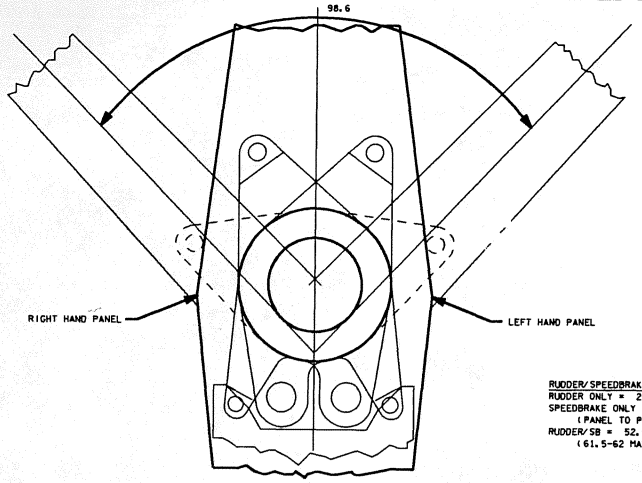

RUDDER/SPEEDBRAKE TRAVEL LIMITS
RUDDER ONLY = 27.1
SPEEDBRAKE ONLY = 98.6 (PANEL TO PANEL)
RUDDER/SB = 52.9 (61.5-62 MAX)

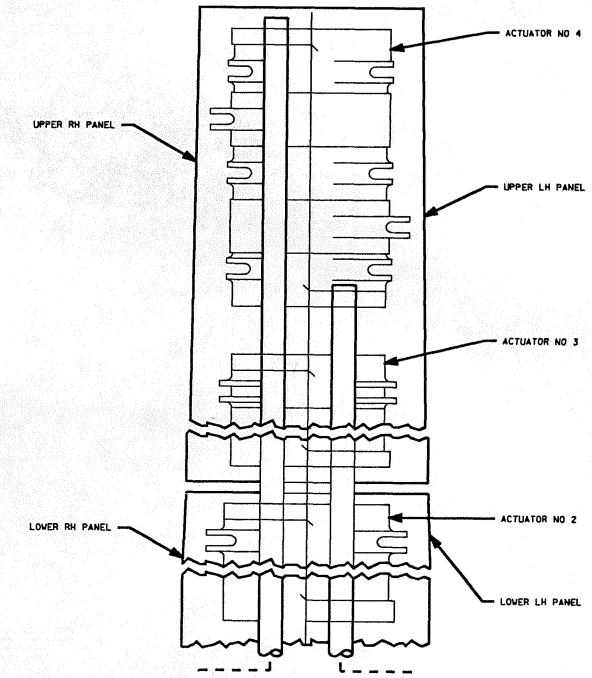

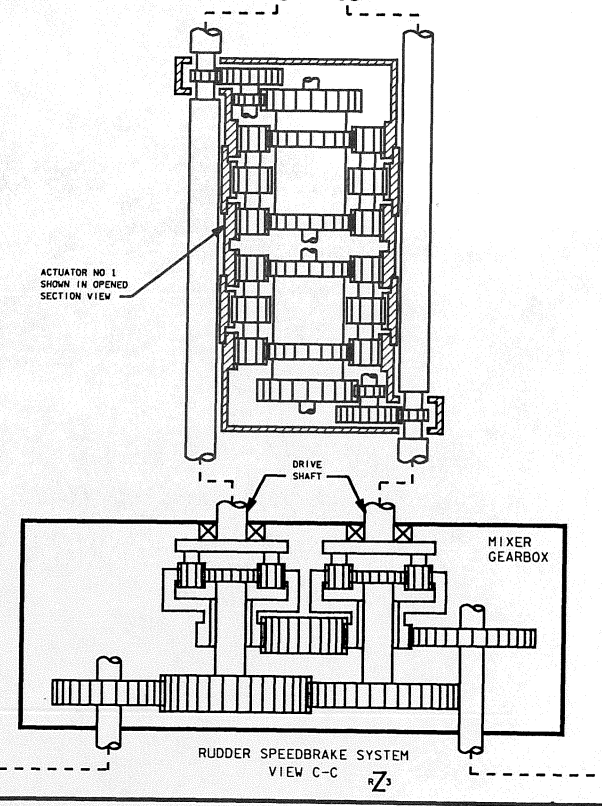

RUDDER SPEEDBRAKE SYSTEM VIEW C-C

DATE: 08/04/94 | NAME: VSH | VERSION: INK-7

SPEEDBRAKE ACTUATOR

CHANNEL 1 AND 3

CHANNEL 2 AND 4

SERVO VALVE 1 (2)

SERVO VALVE 4 (3)

+MA

PIVOT

15μ

LVDT

26 VAC

N-OZ 3-6 12.3-2 TO HYD SWITCH VALVE

100μ

BYPASS VALVE

SECONDARY ΔP

POWER VALVE FEEDBACK WIRE

TRIPLEX POWER VALVE

DRIVE CLOSED

DRIVE OPEN

ROTATING BARREL

HYDRAULIC MOTOR/BRAKE ASSEMBLY (TYPICAL)

HYD MTR/BRK ASSY

OPEN

CLOSE

DIFFERENTIAL GEARBOX

SPEEDBRAKE OUTPUT

RVDT (TYP 1 OF 4)

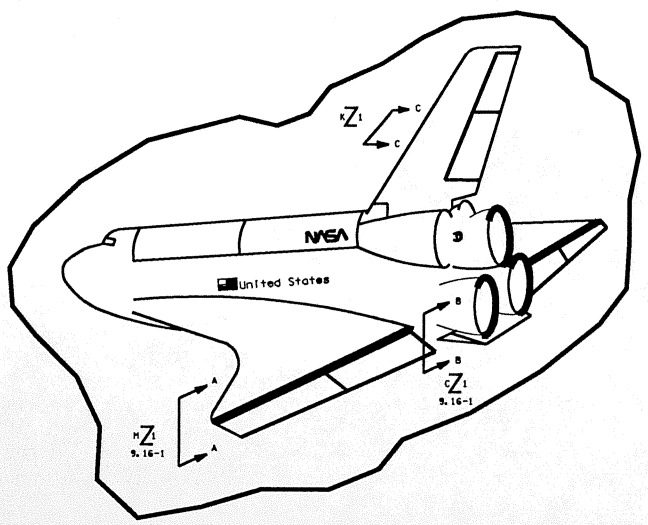

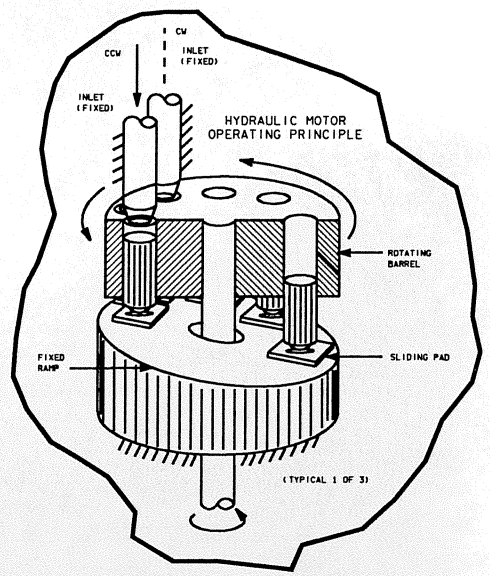

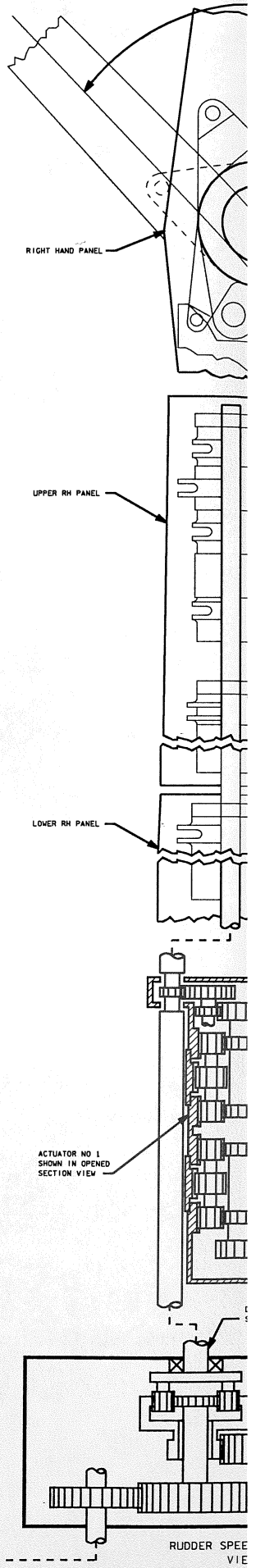

BASIC REV E-4

DATE: 11/20/87	NAME: JMB	VERSION: INK: 6
DATE: 08/20/90	NAME: JMB	VERSION: INK: 7
DATE: 08/29/90	NAME: SEV	VERSION: INK: 8

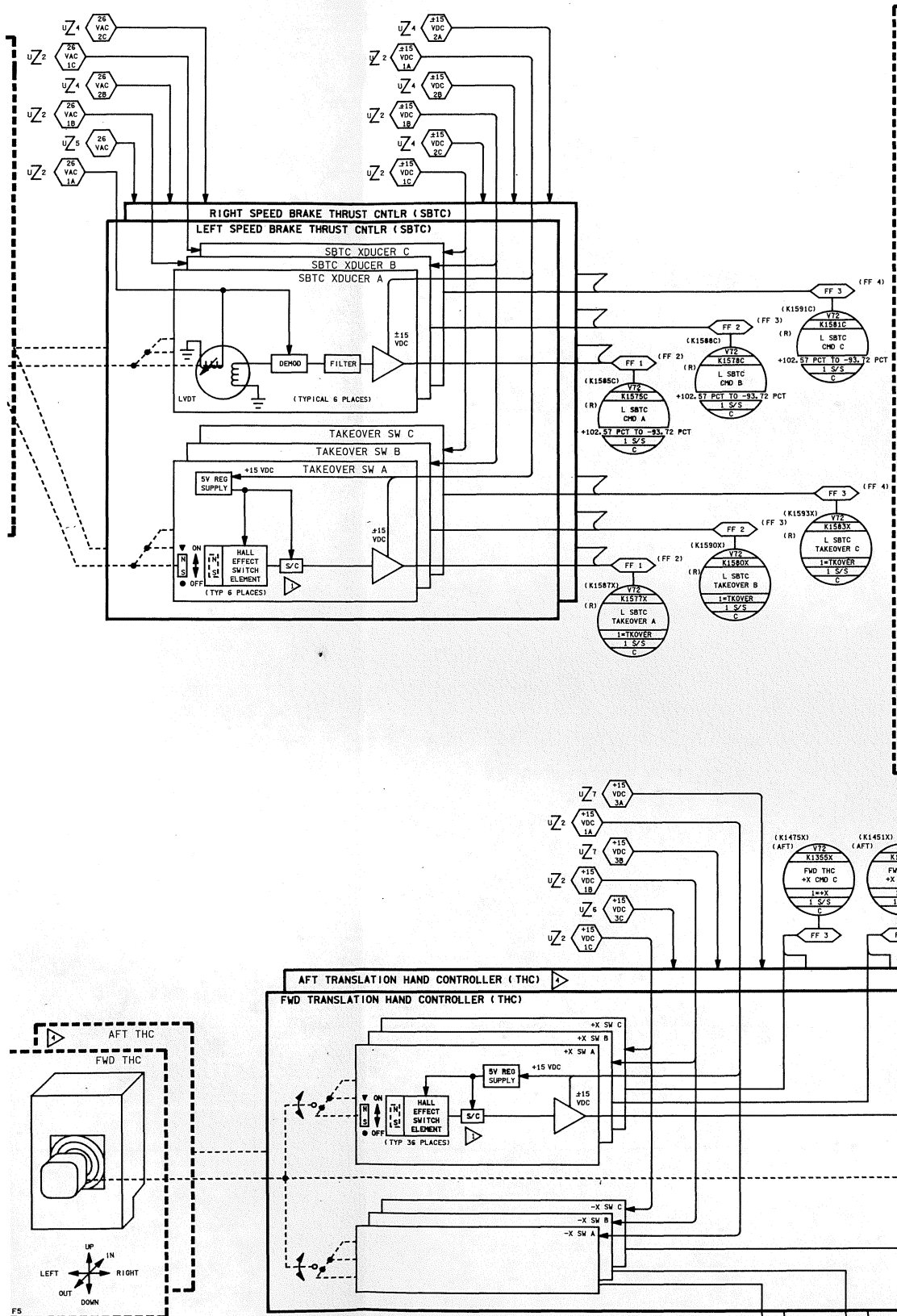

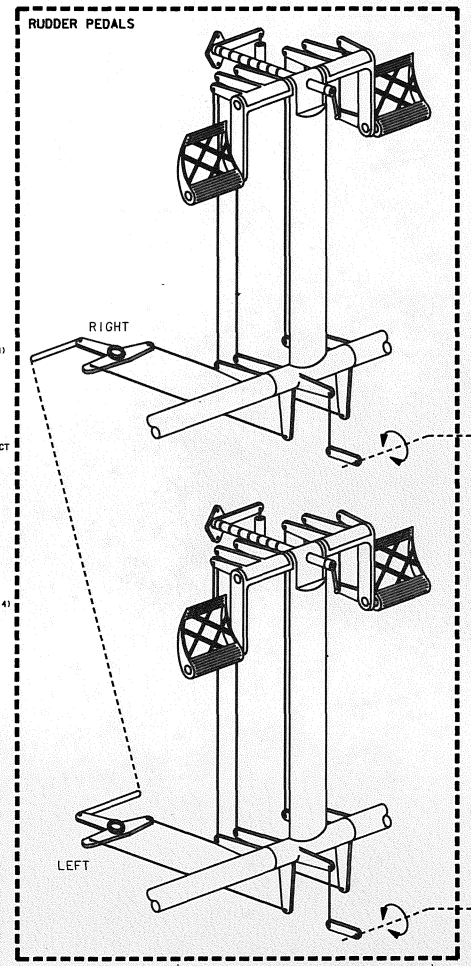

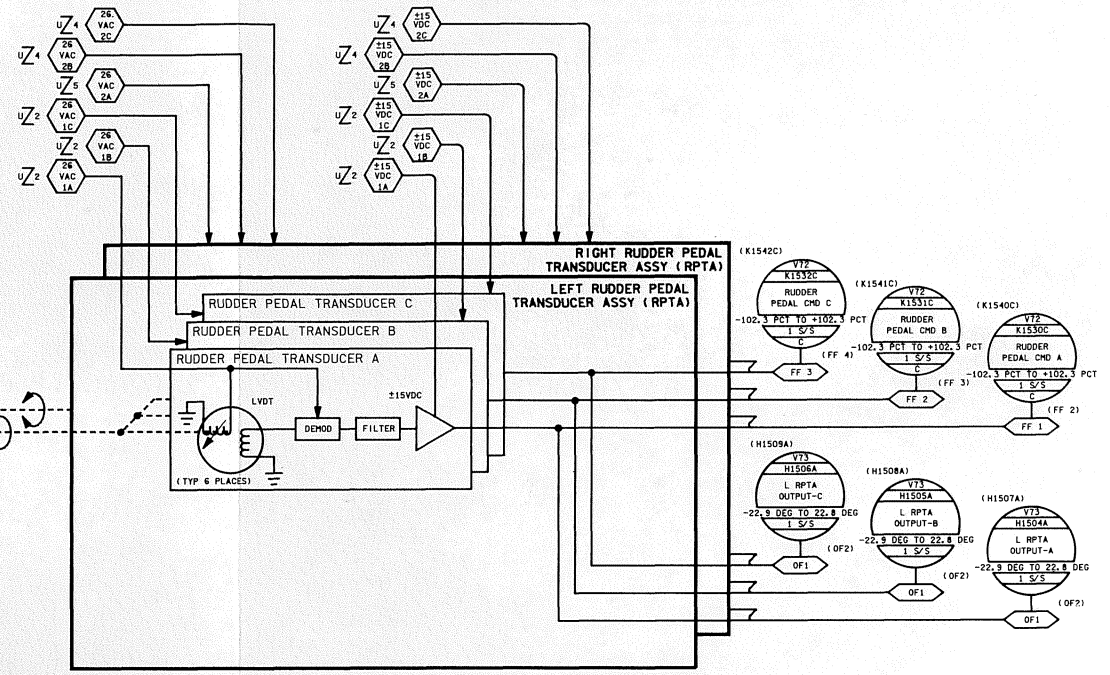

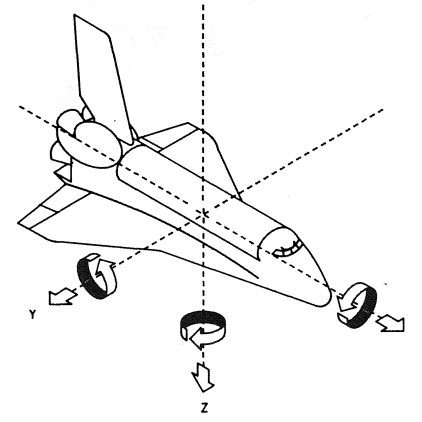

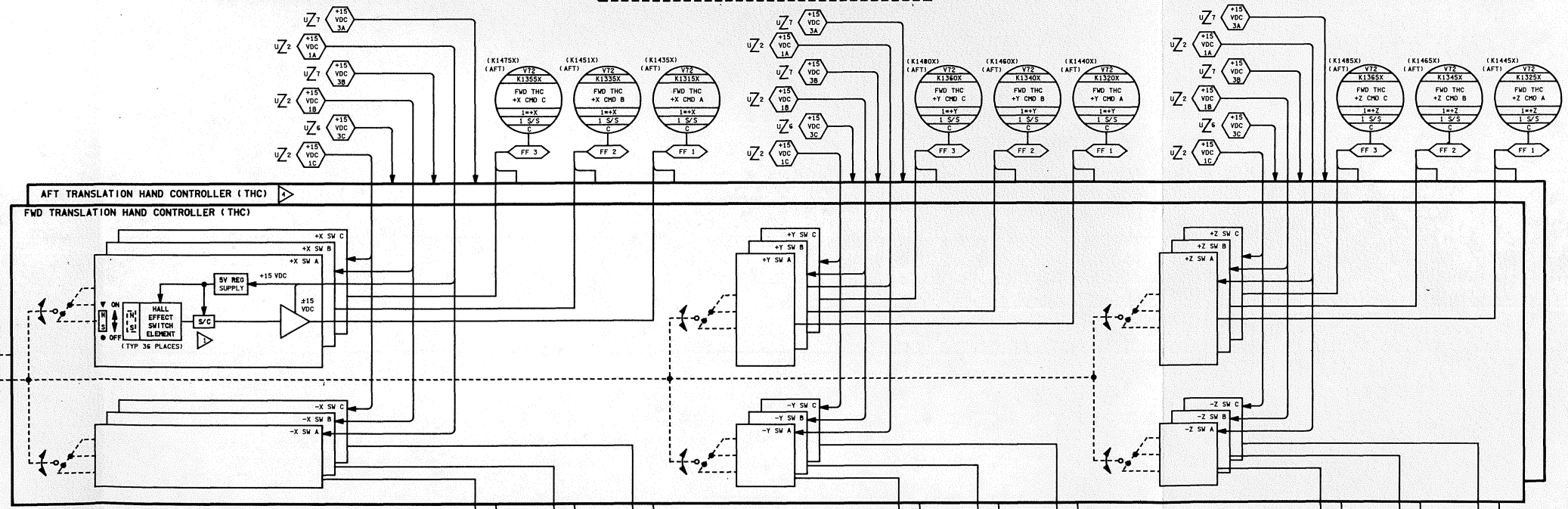

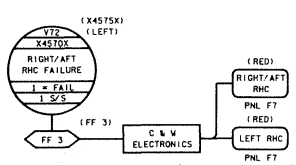

MNL NO	TITLE	MODULE
V94X4406X	AFT RHC CH 1, 2, 3 FAIL	GAX
V94X4407X	L RHC CH 1, 2, 3 FAIL	GAX
V94X4408X	R RHC CH 1, 2, 3 FAIL	GAX
V94X4412X	AFT RHC DLMA	GAX
V94X4413X	L RHC DLMA	GAX
V94X4413X	R RHC DLMA	GAX

6. INHIBITS RHC AND PANEL TRIMS ON THIS SIDE

7. POWER SUPPLY GOOD IS "AND" OF EACH VOLTAGE (26VAC, +15VDC, -15VDC) GOOD

8. BFS WILL ENGAGE ON ONLY 3 OF 3 VOTE FROM LEFT (RIGHT) RHC BFS MODE BUTTON

9. ORBITER MOTION REFERENCE TO BODY AXES, SENSES INDICATED ARE POSITIVE

4. SENSE SWITCH EFFECTS AFT RHC, AFT THC, AND AFT ADI. AFT ATT REF PB EFFECTS LEFT ADI AND RIGHT ADI WHEN IN REF. THE AFT THC IS PHYSICALLY ROTATED 90° CLOCKWISE

AFT RHC CMDS	ORBITAL AXIAL DYNAMICS	
	SENSE -X POSITION	SENSE -Z POSITION
ROLL LT	+X ROT	+Z ROT
ROLL RT	-X ROT	-Z ROT
PITCH UP	-Y ROT	-Y ROT
PITCH DN	+Y ROT	+Y ROT
YAW LT	-Z ROT	+X ROT
YAW RT	+Z ROT	-X ROT

AFT THC MOVEMENT	ORBITAL AXIAL DYNAMICS		COMMANDS DISPLAYED ON BOARD AND IN MCC
	SENSE -X POSITION	SENSE -Z POSITION	
IN (PUSH)	-X TRANS	-Z TRANS	+X
OUT (PULL)	+X TRANS	+Z TRANS	-X
LEFT (PORT)	+Y TRANS	+Y TRANS	+Z
RIGHT (STBD)	-Y TRANS	-Y TRANS	-Z
UP	-Z TRANS	+X TRANS	-Y
DOWN	+Z TRANS	-X TRANS	+Y

3. THREE SCRIBE MARKS ON PANELS ARE AT 25, 50, AND 75 PERCENT POSITIONS OF THE SBTC'S. FULL FORWARD ON CONTROLLER IS 0% SPEEDBRAKE AND 100% THROTTLE. FULL BACK IS 100% SPEEDBRAKE AND 65% THROTTLE

2. BFS AND TRIM ARE NOT USED ON AFT RHC

NOTES: 1. THE HALL SWITCH OUTPUT IS A CONTINUOUS LOGIC 1 OUTPUT FOR AS LONG AS BUTTON IS DEPRESSED

17 CNTLRS

SIGNATURE		DATE
DSGN	S.K. KIMBRELL	8-23-77
DR	S.K. KIMBRELL	3-29-79
ENGR	S.M. SPRUELL	8-17-90
ENGR	S.M. Spruell	9-4-90
APP	Stephen J. Flores	9/10/90
APP	John D. Newman	9/10/90
CHKPLAN	S.K. Kimbrell	9-11-90

NATIONAL AERONAUTICS AND SPACE ADMINISTRATION
LYNDON B. JOHNSON SPACE CENTER HOUSTON, TEXAS

RHC/SBTC/RPTA/THC

SPACE SHUTTLE | DWG NO 9.17

ALL

LTR E | PCN | 126.5 X 34 | PAGE | SHEET 1 OF 1

BASIC REV E

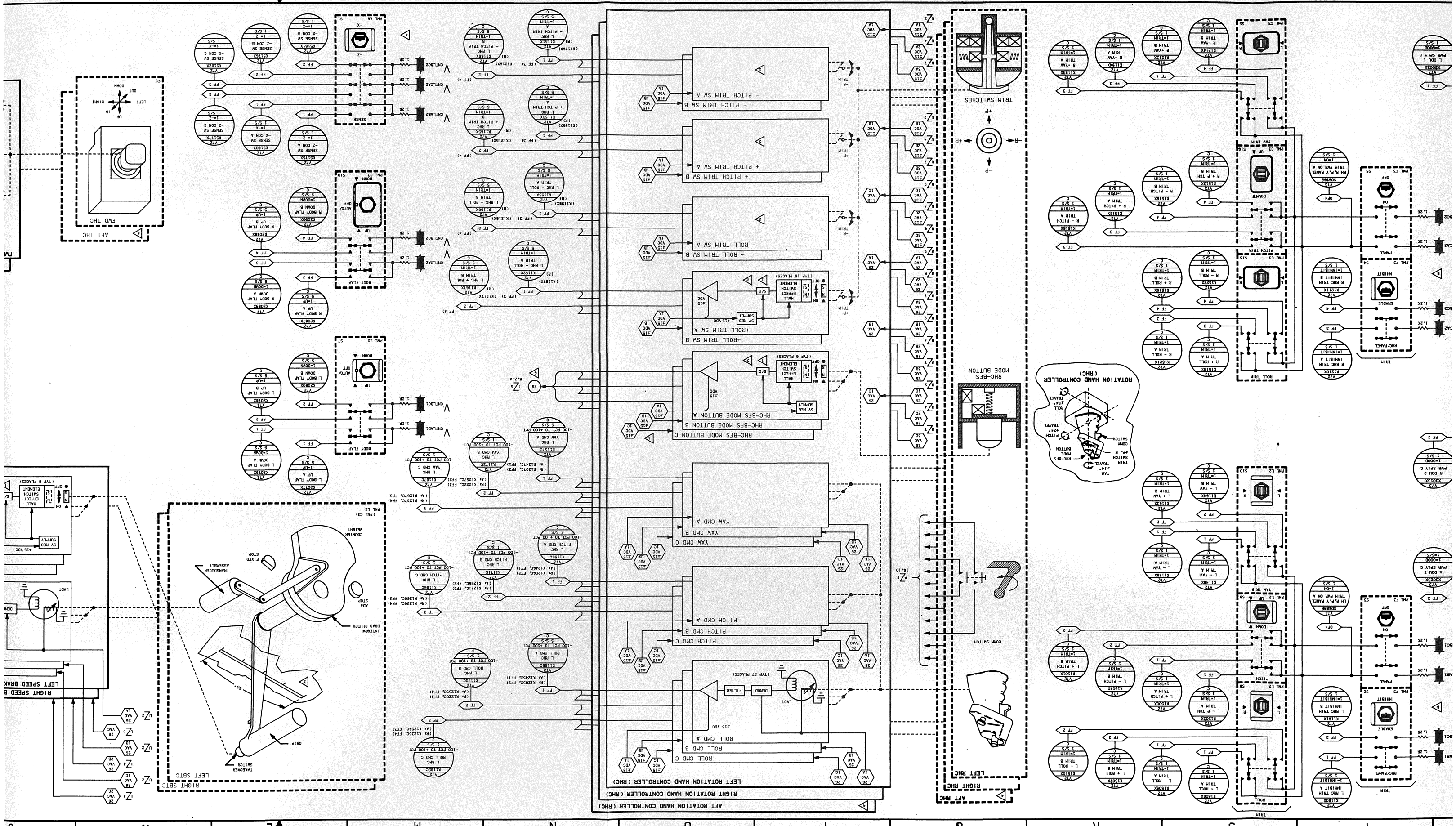
AFT THC
FWD THC
RIGHT SBTC
LEFT SBTC
AFT ROTATION HAND CONTROLLER (RHC)
RIGHT ROTATION HAND CONTROLLER (RHC)
LEFT ROTATION HAND CONTROLLER (RHC)
RHC-BFS MODE BUTTON A
RHC-BFS MODE BUTTON B
RHC-BFS MODE BUTTON C
TRIM SWITCHES
ROTATION HAND CONTROLLER (RHC)
AFT RHC
RIGHT RHC
LEFT RHC
PITCH TRIM
ROLL TRIM
YAW TRIM
TRIM
PANEL
RHC/PANEL
ENABLE
INHIBIT
+ PITCH TRIM SW A
+ PITCH TRIM SW B
- PITCH TRIM SW A
- PITCH TRIM SW B
+ ROLL TRIM SW A
+ ROLL TRIM SW B
- ROLL TRIM SW A
- ROLL TRIM SW B
PITCH CMD A
PITCH CMD B
PITCH CMD C
ROLL CMD A
ROLL CMD B
ROLL CMD C
YAW CMD A
YAW CMD B
YAW CMD C
HALL EFFECT SWITCH ELEMENT
(TYP 16 PLACES)
(TYP 6 PLACES)
(TYP 27 PLACES)
LVDT
DEMOD
FILTER
+15 VDC
+5V REG SUPPLY
TRANSDUCER ASSEMBLY
INTEGRAL DRAG CLUTCH
ADJ STOP
FIXED STOP
COUNTER WEIGHT
60°
GRIP
COMM SWITCH
RHC-BFS MODE BUTTON
TRIM SWITCH
PITCH
ROLL
YAW
SENSE
CNTLBC2
CNTLCA2
CNTLAB2
CNTLBC1
CNTLCA1
CNTLAB1
BOOT FLAP
L BOOT FLAP UP A
L BOOT FLAP UP B
L BOOT FLAP DOWN A
L BOOT FLAP DOWN B
R BOOT FLAP UP A
R BOOT FLAP UP B
R BOOT FLAP DOWN A
R BOOT FLAP DOWN B
AUTO/OFF
UP
DOWN
LEFT
RIGHT
IN
OUT
SENSE SW -X CON A
SENSE SW -X CON B
SENSE SW -Z CON A
SENSE SW -Z CON B
L RHC + PITCH TRIM A
L RHC + PITCH TRIM B
L RHC - PITCH TRIM A
L RHC - PITCH TRIM B
L RHC + ROLL TRIM A
L RHC + ROLL TRIM B
L RHC - ROLL TRIM A
L RHC - ROLL TRIM B
L RHC YAW CMD A
L RHC YAW CMD B
L RHC YAW CMD C
L RHC PITCH CMD A
L RHC PITCH CMD B
L RHC PITCH CMD C
L RHC ROLL CMD A
L RHC ROLL CMD B
L RHC ROLL CMD C
R + PITCH TRIM A
R + PITCH TRIM B
R - PITCH TRIM A
R - PITCH TRIM B
R + ROLL TRIM A
R + ROLL TRIM B
R - ROLL TRIM A
R - ROLL TRIM B
R + YAW TRIM A
R + YAW TRIM B
R - YAW TRIM A
R - YAW TRIM B
L + PITCH TRIM A
L + PITCH TRIM B
L - PITCH TRIM A
L - PITCH TRIM B
L + ROLL TRIM A
L + ROLL TRIM B
L - ROLL TRIM A
L - ROLL TRIM B
L + YAW TRIM A
L + YAW TRIM B
L - YAW TRIM A
L - YAW TRIM B
R RHC TRIM INHIBIT A
R RHC TRIM INHIBIT B
L RHC TRIM INHIBIT A
L RHC TRIM INHIBIT B
RHC PNEL A PWR ON TRIM
L DOU 1 PWR SPLY C
L DOU 2 PWR SPLY C
R DOU 1 PWR SPLY C
R DOU 2 PWR SPLY C
A DOU 3 PWR SPLY C
-15 VDC
+15 VDC
+28 VDC
+5 VDC
+4P
-4P
+4R
-4R
+P
-P
+R
-R
+Z
-Z
+Y
-Y
+X
-X

TRIM SWITCHES

RHC-BFS MODE BUTTON

ROTATION HAND CONTROLLER (RHC)

COMM SWITCH

LEFT RHC

RIGHT RHC

AFT RHC

LEFT ROTATION HAND CONTROLLER (RHC)

RIGHT ROTATION HAND CONTROLLER (RHC)

AFT ROTATION HAND CONTROLLER (RHC)

LEFT DDU 1

RIGHT DDU 2

AFT DDU 3

POWER SUPPLY

TO MAS

DATE: 07/02/96	NAME: JMB	VERSION: BPT: 3
DATE: 07/15/96	NAME: BJB	VERSION: BPT: 4
DATE: 07/29/96	NAME: SVJ	VERSION: INK: 1

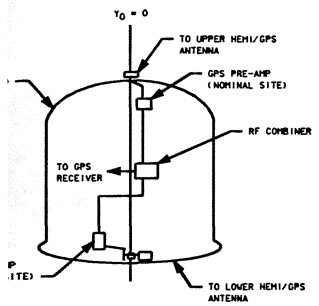

SECTION A-A

PRE-AMP AND RF COMBINER LOCATIONS

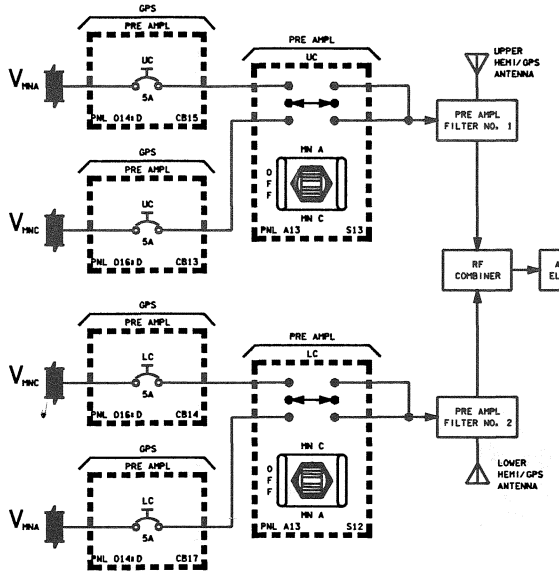

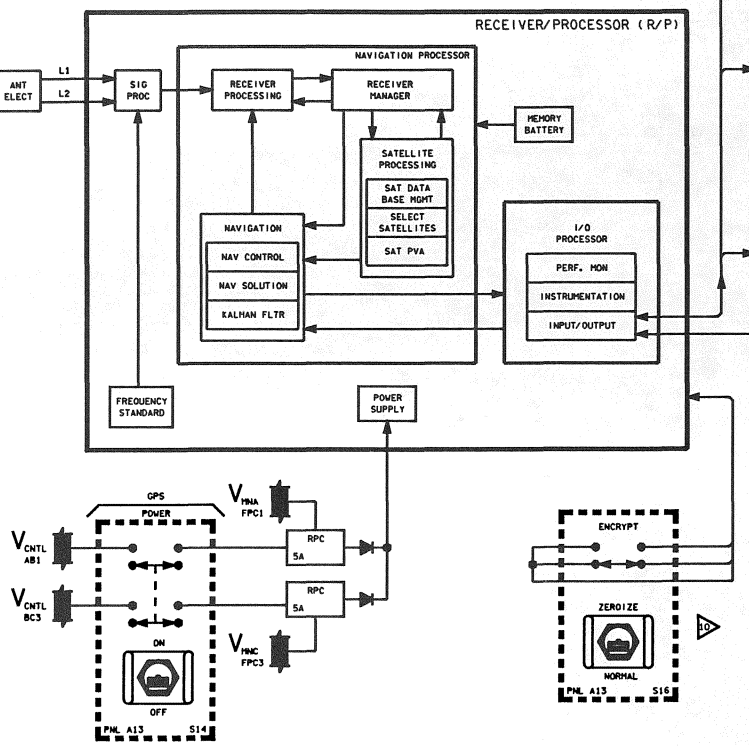

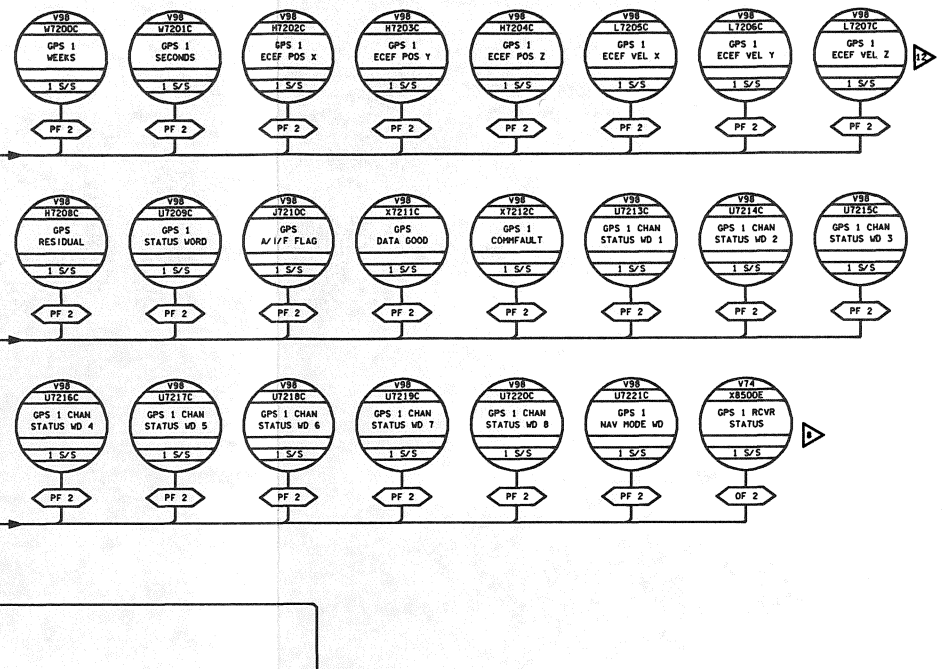

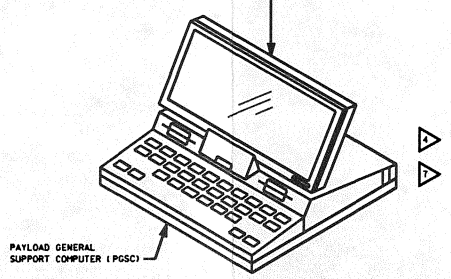

AV BAY 3B

MINIATURE AIRBORNE GPS RECEIVER-SHUTTLE (MAGR-S)
VENDOR: ROCKWELL-COLLINS
WEIGHT: 13 LBS
POWER: 33 WATTS
COOLING: CONVECTION

12 TELEMETRY DATA (ALL V98 MSIDS) ARE ONLY AVAILABLE IN BFS (OPS 1/6,3)

11. THE GPS MAGR-S RECEIVER SHALL BE CAPABLE OF UTILIZING THE PRECISE POSITIONING SYSTEM (PPS)

10. THE ENCRYPTION SWITCH (PANEL A13) WILL BE MOVED FROM THE NORMAL POSITION TO THE ZEROIZE POSITION (POST LANDING) FOR NON-APPROVED LANDING SITES (SECURITY PROTECTION)

9. SPEC 55 "GPS STATUS" (NEW; AVAILABLE IN ALL BFS OPS) AND BFS SPEC 50 "HORIZONTAL SITUATION DISPLAY" (UPGRADED; ASCENT/ENTRY) WILL PROVIDE GPS HEALTH, GPS-DERIVED EQUIVALENT TACAN AZIMUTH AND RANGE PARAMETERS, AND GPS TRACKING OF THE ONBOARD NAV STATE

D DURING ANY OPS, A SINGLE GPS DISCRETE (V74X8500E) IS AVAILABLE VIA PASS MDM OF2
("0" = NOMINAL RECEIVER TRACKING OF 4 SATELLITES, OR THE UNIT IS POWERED OFF)
("1" = THE RECEIVER IS POWERED, BUT IS TRACKING LESS THAN 4 SATELLITES)

7 OPS 2 GPS DATA IS RECORDED ON ITS DEDICATED PGSC AND CAN BE DUMPED PERIODICALLY VIA MODE. GPS DATA RECORDED ON PGSC FOR POST FLIGHT ANALYSIS

6. THE CAPABILITY TO UPDATE THE ONBOARD STATE VECTOR WITH GPS DATA WILL BE CONTROLLED VIA A GPS LOCKOUT BIT (I-LOAD V97U2126C)
V97U2126C = 0 NEVER LEGAL
V97U2126C = 1 NEVER LEGAL
V97U2126C = 2 LEGAL IN MMs 106 AND 301 ONLY
V97U2126C = 3 ALWAYS LEGAL

5. DURING OPS 1 AND OPS 3, THE GPS IS CONNECTED TO THE BFS GPC VIA PAYLOAD MDM PF2 (FOR AIDING AND TELEMETRY)

D DURING OPS 2, THE GPS STATE VECTOR CAN BE RE-INITIALIZED BY TRANSFERRING THE VEHICLE STATE VECTOR VIA THE PGSC

3. NO SMS MODELING OF GPS AVAILABLE IN OI-25, OI-26A

2. THIS SINGLE GPS RECEIVER CONFIGURATION APPLIES TO OV-103, OV-104, AND OV-105 ONLY

NOTES: 1. THE PURPOSE OF THE OI-25, OI-26A GPS FLIGHTS IS TO GAIN EARLY INSIGHT INTO GPS PERFORMANCE IN THE SPACE SHUTTLE ENVIRONMENT. THIS CONFIGURATION IS BASICALLY AN ENHANCED VERSION OF THE GPS DFT (FLOWN ON OV-105 FLIGHTS)

18 GPS

SIGNATURE		DATE	NATIONAL AERONAUTICS AND SPACE ADMINISTRATION LYNDON B. JOHNSON SPACE CENTER HOUSTON, TEXAS	
DSGN J. BLANCHARD		05/16/96	GLOBAL POSITIONING SYSTEM (GPS) OI-25 AND OI-26A	
DR				
ENGR E. LIEBMAN				
ENGR E. Liebman		7/29/96		
APP A.D. Aaron		7/29/96		
APP Tom Kelly		7/30/96	SPACE SHUTTLE	DWG NO 9.18
CADS S.K. Kimble		8-1-96	ALL	
LTR E	PCN 6		66 X 34	PAGE SHEET 1 OF 1

BASIC REV E-6

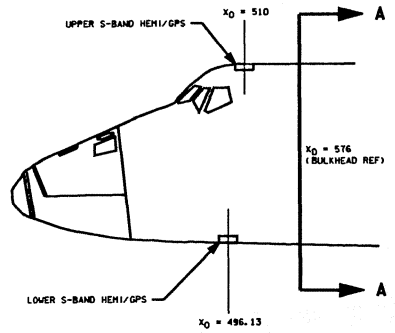

EXISTING ANTENNAS

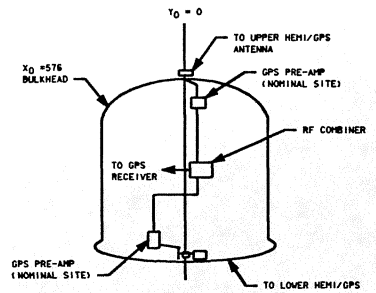

SECTION A-A

PRE-AMP AND RF COMBINER LOCATIONS

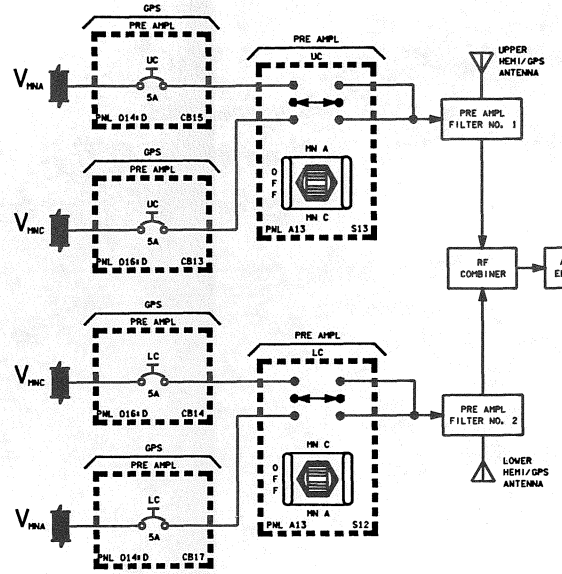

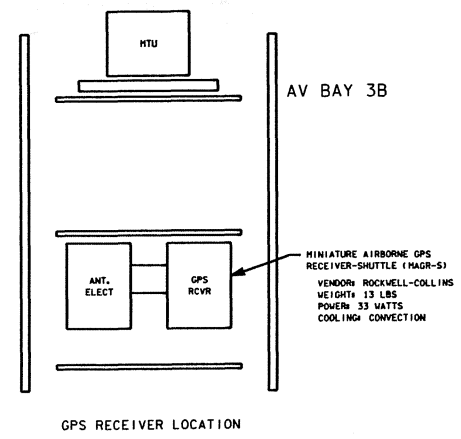

GPS RECEIVER LOCATION

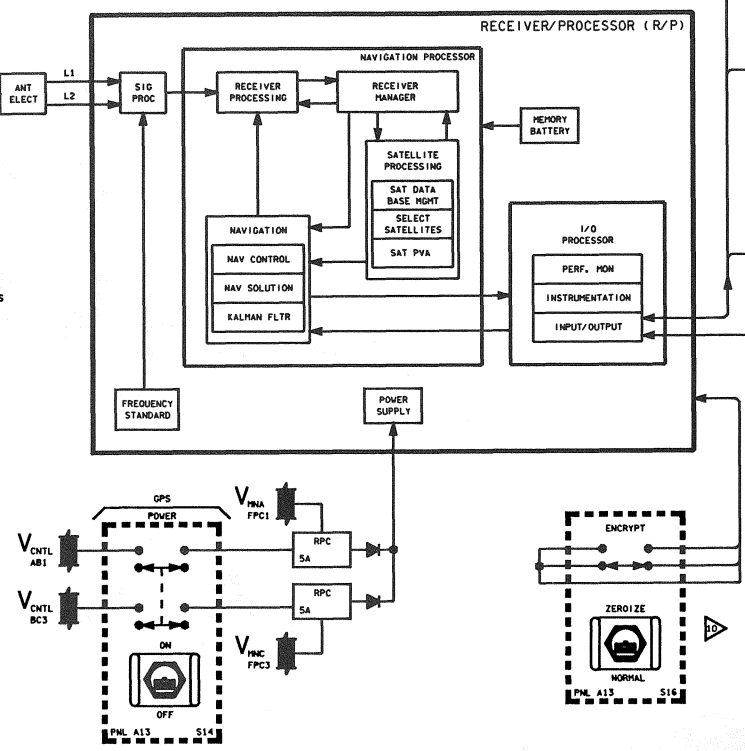

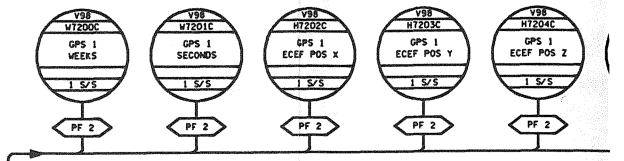

DATE: 08/29/90	NAME: VSH	VERSION: INK, 4
DATE: 10/10/91	NAME: LAM	VERSION: INK, 5
DATE: 10/28/91	NAME: LAM	VERSION: INK, 6

HUDE

UNFILTERED BIT LATCHING LOGIC

UNFILTERED BIT

PDU

BRIGHT-UP AMPLIFIER

BRIGHTNESS CONTROL

C

BUFFER AMPLIFIER

GAMMA COR

GAMMA RTN

+B/U

BUFFER AMPLIFIER

Σ

CATHODE DRIVE AMPLIFIER

CUTOFF ADJ

CATH

CATHODE OVER/UNDER VOLTAGE

HUDE FAIL

PDU FAIL

X IN SLOW

Y IN SLOW

BIT LOGIC CIRCUIT

HVPS FAIL

FILAMENT CURRENT DET

X OUT SLOW

Y OUT SLOW

PHOSPHOR PROTECT CIRCUIT

HVPS ON/OFF CKT

HVPS ON/OFF

FIL RTN

FIL PWR

FILAMENT REG

+10 VDC

+88 VDC

+18 VDC

+5 VDC

+28 VDC

HIGH VOLTAGE POWER SUPPLY AND SINGLE POINT GROUND

+500V

+12.5 KV

HARMONIZATION CIRCUIT

GAMMA COR

GAMMA RTN

GAMMA CORRECT

GRID AND FOCUS ARC PROTECT

G2 AND FOCUS

CRT

X YOKE RTN

X YOKE DRIVE

12.5 KV

X YOKE

CUTOFF ADJ

CUTOFF ADJ

CATHODE ARC PROTECT

CATH

+18 VDC

CATH

FIL PWR

FIL RTN

GRID

X DEFLECTION OFFSET ADJ

X DEFL OFFSET

X DEFL GAIN

FEEDBACK CKT GAIN ADJ

X YOKE DR

Y YOKE

Y DEFLECTION OFFSET ADJ

Y DEFL OFFSET

Y YOKE RTN

Y YOKE DRIVE

Y DEFL GAIN

FEEDBACK CKT MAIN ADJ

Y YOKE DR

ABC SENSOR

MODE TEST

NORM

DCLT

DIM

BRT

MAN DAY

AUTO

MAN NIGHT

PNL F6

(PNL F8)

LATCH X OFFSET

X SIN M DAC

X COS M DAC

X DEFL AMP

±X

Y COS M DAC

Y SIN M DAC

Y DEFL AMP

±Y

Y OFFSET LATCH

±X

Y DEFL AMPLIFIER

X DEFL AMPLIFIER

X DEFL OFFSET

±Y DEFL

±X DEFL

DIFF RCVR

LINEARITY CORRECT

DEFL HYBRID AMPLIFIER

POWER AMPLIFIER

Y DEF OFF

Y YOKE DRIVE

X YOKE DRIVE

Y DEFL GN

X DEFL GN

Y YOKE RTN

X YOKE RTN

Y IN SLOW

X IN SLOW

INPUT RATE DETECT

D/A CONVERTER

FEEDBACK CKT GAIN ADJ

BIAS CHK STROBE

BIAS CHK STROBE

Y OUT SLOW

X OUT SLOW

COUNTER

COMPARATOR

SWITCH RATE ETECT

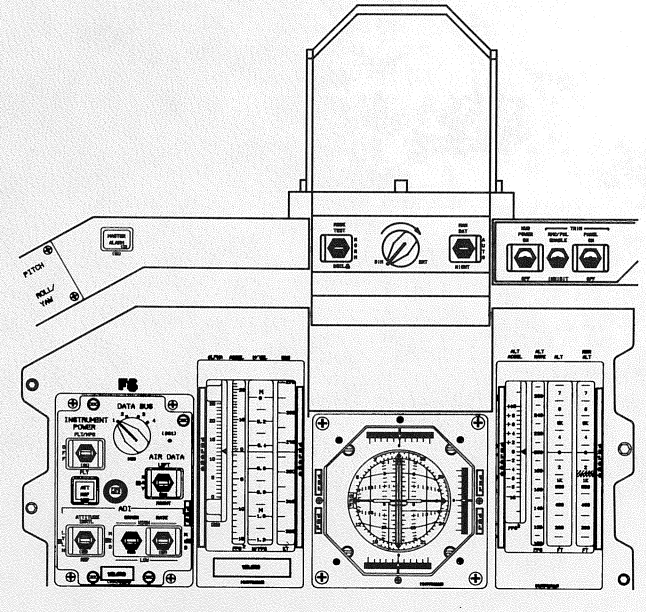

NOTES: ▷ SIGNAL PICKUP PRIOR TO ACA

20 HUD

SIGNATURE		DATE	
DSGN	S.K. KIMBRELL	12/1/81	NATIONAL AERONAUTICS AND SPACE ADMINISTRATION LYNDON B. JOHNSON SPACE CENTER HOUSTON, TEXAS
DR	S.K. KIMBRELL	12/1/81	
ENGR	S.M. SPRUELL		HEADS UP DISPLAY
ENGR	S.M. Spruell	11-1-91	
APP	Gordon J. Ebner	11-5-91	
APP	S.K. Kimbrell	11/6/91	SPACE SHUTTLE / DWG NO 9.20
OPR/PLAN	S.K. Kimbrell	11-12-91	ALL
LTR	E	PCN 1	121 X 34 / PAGE / SHEET 1 OF 1

BASIC REV E-1

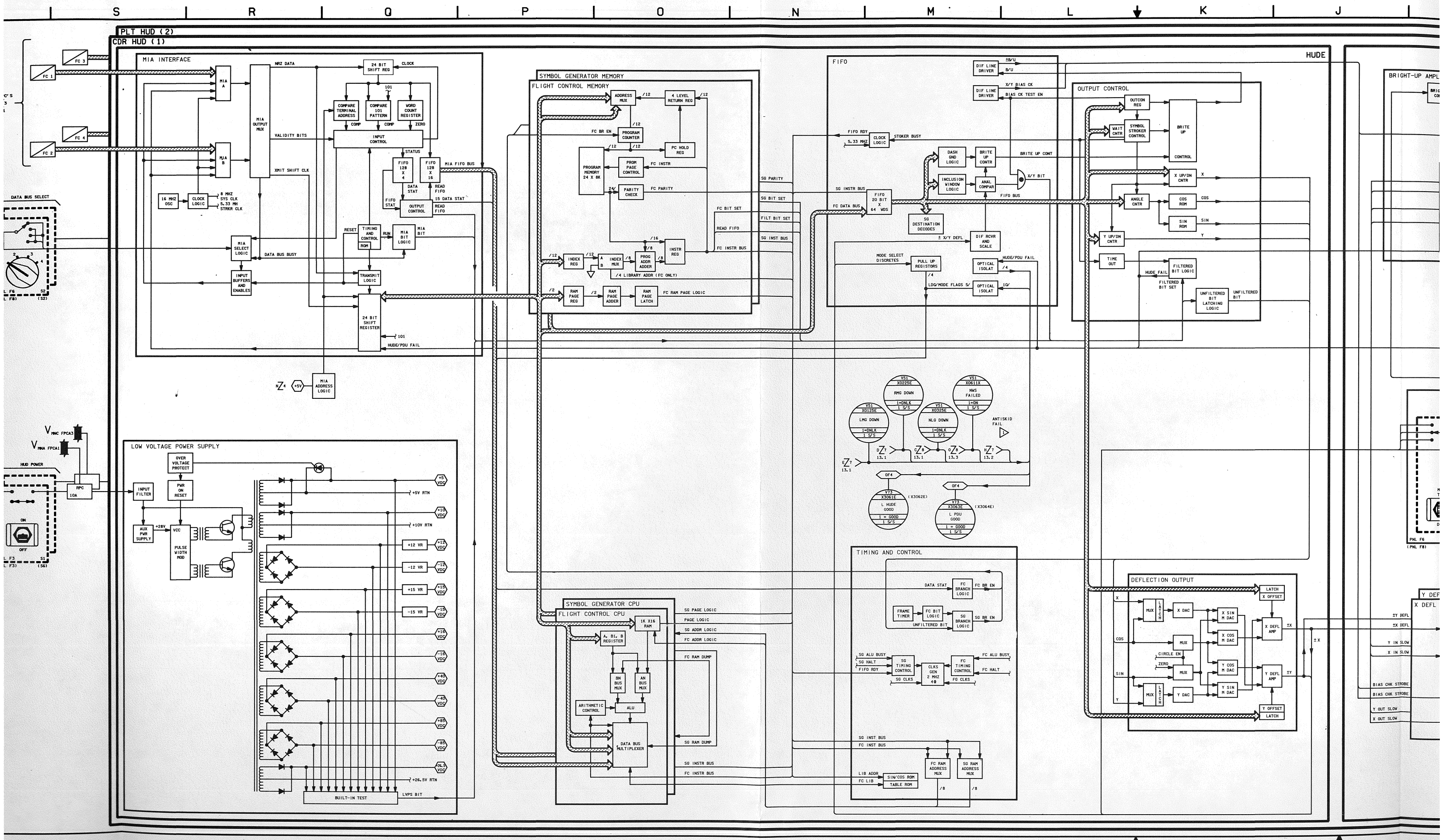

S
R
Q
P
O
N
M
L
K
J
PLT HUD (2)
CDR HUD (1)
HUDE
MIA INTERFACE
SYMBOL GENERATOR MEMORY
FLIGHT CONTROL MEMORY
FIFO
OUTPUT CONTROL
BRIGHT-UP AMPL
LOW VOLTAGE POWER SUPPLY
SYMBOL GENERATOR CPU
FLIGHT CONTROL CPU
TIMING AND CONTROL
DEFLECTION OUTPUT
DATA BUS SELECT
HUD POWER

DATE: 10/28/91 | NAME: LAM | VERSION: INK-6

PLT HUD (2)

CDR HUD (1)

MIA INTERFACE

TO GPC'S

FC 3

FC 1

FC 4

FC 2

MIA A

MUA B

MIA OUTPUT MUX

NRZ DATA

CLOCK

24 BIT SHIFT REG

COMPARE TERMINAL ADDRESS

COMPARE 101 PATTERN

WORD COUNT REGISTER

COMP

ZERO

VALIDITY BITS

INPUT CONTROL

STATUS

XMIT SHIFT CLK

FIFO 128 X 4

FIFO 128 X 16

MIA FIFO BUS

DATA STAT

READ FIFO

15 DATA STAT

FIFO STAT

OUTPUT CONTROL

16 MHZ OSC

CLOCK LOGIC

8 MHZ SYS CLK

5.33 MN STRKR CLK

DATA BUS SELECT

PNL F6 (PNL F8)

S2 (S2)

MIA SELECT LOGIC

DATA BUS BUSY

RESET

TIMING AND CONTROL

ROM

RAM

MIA BIT LOGIC

MIA BIT

INPUT BUFFERS AND ENABLES

TRANSMIT LOGIC

24 BIT SHIFT REGISTER

HUDE/PDU FAIL

MIA ADDRESS LOGIC

+5V

SYMBOL GENERATOR MEMORY

FLIGHT CONTROL MEMORY

ADDRESS MUX

4 LEVEL RETURN REG

PROGRAM COUNTER

FC BR EN

PC HOLD REG

PROGRAM MEMORY 24 X 8K

PROM PAGE CONTROL

FC INSTR

PARITY CHECK

FC PARITY

SG PARITY

SG BIT SET

FC BIT SET

FILT BIT SET

READ FIFO

SG INST BUS

FC INSTR BUS

INSTR REG

INDEX REG

INDEX MUX

PROG ADDR ADDER

/4 LIBRARY ADDR (FC ONLY)

RAM PAGE REG

RAM PAGE ADDER

RAM PAGE LATCH

FC RAM PAGE LOGIC

FIFO

SG INS

FC DATA

LOW VOLTAGE POWER SUPPLY

OVER VOLTAGE PROTECT

PWR ON RESET

INPUT FILTER

AUX PWR SUPPLY

+28V

VCC

PULSE WIDTH MOD

+5 VDC

+5V RTN

+10 VDC

+10V RTN

+12 VDC

+12 VR

-12 VDC

-12 VR

+15 VDC

+15 VR

-15 VDC

-15 VR

+18 VDC

-18 VDC

+40 VDC

-40 VDC

+80 VDC

-80 VDC

+26.5 VDC

+26.5V RTN

BUILT-IN TEST

LVPS BIT

$V_{MNC\ FPCA3}$

$V_{MNA\ FPCA1}$

$V_{CNTL\ BC1}$

$V_{CNTL\ AB2}$

1.2K

1.2K

HUD POWER

RPC 10A

ON

OFF

PNL F3 (PNL F3)

S1 (S6)

SYMBOL GENERATOR CPU

FLIGHT CONTROL CPU

1K X16 RAM

A, B1, B REGISTER

BN BUS MUX

AN BUS MUX

ARITHMETIC CONTROL

ALU

DATA BUS MULTIPLEXER

SG PAGE LOGIC

PAGE LOGIC

SG ADDR LOGIC

FC ADDR LOGIC

FC RAM DUMP

SG RAM DUMP

SG INSTR BUS

FC INSTR BUS

BASIC REV E-1

FOR DETAILED COMPONENT AND LOGIC INFORMATION REFER TO:

SSSH DWG NO.	SSSH DWG TITLE	VENDOR NAME	VENDOR DWG NO.	VENDOR SHEET NO.	REV	DATE	VENDOR DRAWING TITLE
9.1	G&C DEDICATED DISPLAYS	R.I.	VS70-730109	ALL	D	8/19/85	SCHEMATIC - DISPLAYS & CONTROLS
		R.I.	VS70-730172	ALL	C	8/25/85	SCHEMATIC - DISPLAYS & CONTROLS
		R.I.	VS70-733539	ALL	B	8/22/83	SCHEMATIC - PANEL F6A8 FORWARD MAIN CONSOLE
		R.I.	VS70-730249	ALL	A	9/13/82	SCHEMATIC - D&C ANNUNCIATORS
9.2	TACAN	R.I.	VS70-740179	ALL	D	12/9/88	SCHEMATIC DIAGRAM - COMMUNICATION & TRACKING TACAN SUBSYSTEM
		R.I.	MC409-0014	ALL	A	5/20/74	RECEIVER - TRANSMITTER, AIR NAVIGATION SET, TACTICAL
		HOFFMAN ELECTRONICS	12R5-2ARN-84(V)-2	ALL	---	8/1/73	TECHNICAL MANUAL, INTERMEDIATE MAINTENANCE, NAVIGATION SET, TACAN
9.3	RADAR ALTIMETER	R.I.	VS70-740159	---	D	7/19/88	SCHEMATIC DIAGRAM - COMM AND TRACKING, RADAR ALTIMETER
		HONEYWELL	W0075-T601-001	---	A	8/22/75	OPERATION AND SERVICE INSTRUCTIONS AND CALIBRATION PROCEDURES FOR THE ORBITER RA
9.4	MICROWAVE SCANNING BEAM LANDING SYSTEM	R.I.	VS70-740569	ALL	C	6/1/88	SCHEMATIC DIAGRAM - COMM & TRACKING, MICROWAVE SCAN BEAM LANDING SYS
9.5	COAS	R.I.	V620-660720	2	A	2/2/77	BRACKETT ASSEMBLY - CREWMAN OPTICAL ALIGNMENT SIGHT, FORWARD
		R.I.	V620-660731	2	A	7/1/77	BRACKETT - AFT OPERATIONAL, CREWMAN OPTICAL ALIGNMENT SIGHT, ASSY OF
		R.I.	V620-660810	2	C	1/30/77	SIGHT - CREWMAN OPTICAL ALIGNMENT, ASSY OF

DWG	SIGNATURE	DATE
9.1	ENGR H. M. MITCHELL	
	ENGR Heather Mitchell	9-11-90
9.2	ENGR J. M. WEBB	
	ENGR James M. Webb	9/11/90
9.3	ENGR M. T. SEVERANCE	
	ENGR Mark T. Severance	11SEP90
	ENGR	
	ENGR	

DWG	SIGNATURE	DATE
9.4	ENGR J. M. WEBB	
	ENGR James M. Webb	9/11/90
9.5	ENGR M. T. SEVERANCE	
	ENGR Mark T. Severance	11 SEP 90
	APP Stephen J. Elsner	9/11/90
	APP John A. Kamman	9/11/90
	LTR E	PCN

NATIONAL AERONAUTICS AND SPACE ADMINISTRATION
LYNDON B. JOHNSON SPACE CENTER HOUSTON, TEXAS

VENDOR DRAWING REFERENCES

SPACE SHUTTLE | TBL NO 9-I

ALL

BASIC REV E

FOR DETAILED COMPONENT AND LOGIC INFORMATION REFER TO:

SSSH DWG NO.	SSSH DWG TITLE	VENDOR NAME	VENDOR DWG NO.	VENDOR SHEET NO.	REV	DATE	VENDOR DRAWING TITLE
9.6 (SHEET 1)	STAR TRACKER	R.I.	VS70-590202	2	E	3/29/83	SCHEMATIC DIAGRAM - STAR TRACKER DOOR ACTUATOR SUBSYSTEM
9.6 (SHEET 2)	STAR TRACKER	R.I.	MC431-0128	---	B	11/12/87	STAR TRACKER SUBSYSTEM SPEC
		BALL BROTHERS	---	---	---	9/18/75	SCHEMATIC DIAGRAM IDT AND PREAMPLIFIER CIRCUITS
		BALL BROTHERS	---	---	---	9/11/75	PARALLEL ADDER
		BALL BROTHERS	---	---	---	9/8/75	LOW VOLTAGE POWER SUPPLY
		BALL BROTHERS	---	---	---	---	PROM COMPENSATION CIRCUIT
		BALL BROTHERS	---	---	---	9/11/75	A/D CONVERTER, PROM SWITCHING NETWORK
		BALL BROTHERS	---	---	---	9/18/75	SCHEMATIC DIAGRAM - COMPENSATION
		BALL BROTHERS	---	---	---	9/18/75	GENERAL TRACKER LOGIC
		BALL BROTHERS	---	---	---	9/18/75	SCHEMATIC DIAGRAM - POWER SUPPLY RANGE CONTROL CIRCUIT
		BALL BROTHERS	---	---	---	9/11/75	VIDEO CIRCUITS
		BALL BROTHERS	---	---	---	9/18/75	SPACE SHUTTLE TRACKER BRIGHT OBJECT SENSOR
		BALL BROTHERS	---	1-2	---	9/18/75	SCHEMATIC DIAGRAM - DEFLECTIONS CIRCUITS
		BALL BROTHERS	---	---	---	9/11/75	SAMPLE LOGIC
		BALL BROTHERS	---	---	---	9/18/75	SERIAL OUTPUT REGISTERS AND BITE COMPARATORS
		BALL BROTHERS	---	---	---	9/23/75	IAU INTERFACE ADAPTER UNIT
		BALL BROTHERS	---	---	---	9/11/75	MISC. CIRCUITS
		BALL BROTHERS	---	---	---	9/11/75	SCHEMATIC DIAGRAM - HIGH VOLTAGE POWER SUPPLY
		BALL BROTHERS	---	---	---	9/11/75	SCHEMATIC DIAGRAM - COMPENSATION CONTROL CIRCUIT
9.6 (SHEET 3)	STAR TRACKER	BALL	515876	1	A	1/22/90	SCHEMATIC DIAGRAM FOCAL PLANE
		BALL	515879	1	---	9/10/90	SCHEMATIC DIAGRAM SHUTTLE TRACKER POWER SUPPLY
		BALL	515885	1,2,3	B	11/12/89	SCHEMATIC DIAGRAM CIO
		BALL	515888	1,2	C	5/16/90	SCHEMATIC DIAGRAM TRACKER UTILITIES INTERFACE
		BALL	515891	1,2	C	10/9/90	SCHEMATIC DIAGRAM SHUTTLE TRACKER PROCESSOR
		BALL	515895	1	A	12/3/90	SCHEMATIC DIAGRAM SSST INTERCONNECT

DWG	SIGNATURE	DATE	DWG	SIGNATURE	DATE
9.6	ENGR C. K. ALFORD			ENGR	
	ENGR Charles Alford	10/7/93		ENGR	
	ENGR			ENGR	
	ENGR			ENGR	
	ENGR			APP John P. Stamm	10/7/93
	ENGR			APP John A. Kamman	10/7/93
	ENGR			OMNIPLAN	
	ENGR			LTR E PCN 3	

NATIONAL AERONAUTICS AND SPACE ADMINISTRATION
LYNDON B. JOHNSON SPACE CENTER HOUSTON, TEXAS

VENDOR DRAWING REFERENCES

SPACE SHUTTLE | TBL NO 9-I

ALL

BASIC REV E-3

FOR DETAILED COMPONENT AND LOGIC INFORMATION REFER TO:

SSSH DWG NO.	SSSH DWG TITLE	VENDOR NAME	VENDOR DWG NO.	VENDOR SHEET NO.	REV	DATE	VENDOR DRAWING TITLE
9.7	INERTIAL MEASUREMENT UNIT - HAINS	KEARFOTT	Y256C392			2/91	ORBITER HIGH ACCURACY INERTIAL NAVIGATION SYSTEM TECHNICAL DESCRIPTION
				42 (45, 48)	D	10/29/85	IMU 1 (2,3) STABILIZATION LOOPS AND SINES/COSINES OF ATTITUDE ANGLES
				43 (46,49)	D	10/29/85	IMU 1 (2,3) ACCELEROMETERS AND DATA INPUT/OUTPUT
		R.I.	VS70-710102	1-3	D	3/11/83	SCHEMATIC DIAGRAM - INERTIAL MEASUREMENT UNIT (IMU) G/N SUBSYSTEM
		R.I.	VS70-710109	1-3	-	10/21/80	SCHEMATIC DIAGRAM - INERTIAL MEASUREMENT UNIT (IMU) G/N SUBSYSTEM
		SINGER KEARFOTT	Y254A176	-	-	6/15/76	ORBITER INERTIAL MEASUREMENT UNIT (IMU) TECHNICAL DESCRIPTION
9.8	RATE GYROS/BODY-MOUNTED ACCELERO-METERS	R.I.	VS70-710152	-	E	1/14/81	SCHEMATIC DIAGRAM - ORBITER RATE GYRO GDNC & NAV SYSTEM
		R.I.	VS70-710179	-	D	4/23/88	SCHEMATIC DIAGRAM - SOLID RKT BSTER RATE GYRO GDNC & NAV SUBSYSTEM
		R.I.	VS70-790112	-	C	1/24/80	SCHEMATIC DIAGRAM - ACCELEROMETER ASSY FLT CONTROL SUBSYSTEM
		R.I.	VS70-971102	13-20	D	10/29/85	INTEGRATED SYSTEMS SCHEMATICS OV-102 GNC & DPS
		HONEYWELL	34024066	-	A	9/11/74	AA POWER SUPPLY
		NORTHRUP	101069	-	D	11/17/75	SCHEMATIC POWER SUPPLY ASSEMBLY MODULE
9.9	AIR DATA SYSTEM	R.I.	VS70-590302	1-6	D	1/28/80	AIR DATA PROBE DEPLOYMENT AND HEATER
		R.I.	VS70-590309	1-5	-	10/21/80	AIR DATA PROBE DEPLOYMENT AND HEATER
		R.I.	VS70-971102	50 (51-53)	-	10/29/85	AIR DATA SYSTEM PATH W (2-4)
				101 - 102 (103-104)			AIR DATA PROBE RIGHT (LEFT) DEVELOPMENT AND HEATER
9.10	FCS MODE SWITCHES	R.I.	VS70-733539	-	B	9/22/83	SCHEMATIC DIAGRAM PANEL F6A8 FWD MAIN CONSOLE FOR ABORT SWITCHES
		R.I.	VS70-730249	-	A	3/8/83	SCHEMATIC DIAGRAM D & C ANNUNCIATOR SUBSYSTEM
		R.I.	VS70-790209	-	C	12/4/84	SCHEMATIC DIAGRAM DISPLAY & CONTROL SWITCHES FLIGHT CONTROL SUBSYSTEM
		R.I.	V070-730284	-	B	9/24/79	PANEL ASSEMBLY - C3A6, CENTER CONSOLE, DISPLAYS AND CONTROLS
		R.I.	V070-730325	-	B	1979	PANEL ASSEMBLY - A6C3, AFT CONSOLE, DISPLAYS AND CONTORLS
9.11	AERO SURFACE SIGNAL FLOW	R.I.	VS70-790222	-	C	4/4/79	SCHEMATIC DIAGRAM - ASA FLIGHT CONTROLS SUBSYSTEM
		R.I.	VS70-790229	-	D	11/11/83	SCHEMATIC DIAGRAM - ASA FLIGHT CONTROLS SUBSYSTEM
		R.I.	VS70-7790202	-	E	1/11/85	SCHEMATIC DIAGRAM - D & C FLIGHT CONTROLS SUBSYSTEM
		R.I.	VS70-790209	-	C	12/4/84	SCHEMATIC DIAGRAM - D & C FLIGHT CONTROLS SUBSYSTEM

DWG	SIGNATURE	DATE	DWG	SIGNATURE	DATE
9.7	ENGR G. ALFORD		9.11	ENGR L. STALLARD	
	ENGR Charles Alford	9/22/94		ENGR Lawrence A Stallard	9/22/94
9.8	ENGR D. MARQUETTE			ENGR	
	ENGR DAE MARQUETTE	9/27/94		ENGR	
9.9	ENGR K. DUNN			APP Stanley Schoenbauer	9/26/94
	ENGR [signature]	9/22/94		APP	
9-10	ENGR B. SCHOENBAUER			APP	
	ENGR [signature]	9/27/94		LTR E	PCN 4

NATIONAL AERONAUTICS AND SPACE ADMINISTRATION
LYNDON B. JOHNSON SPACE CENTER HOUSTON, TEXAS

VENDOR DRAWING REFERENCES

SPACE SHUTTLE | TBL NO 9-I
ALL

BASIC REV E-4

FOR DETAILED COMPONENT AND LOGIC INFORMATION REFER TO:

SSSH DWG NO.	SSSH DWG TITLE	VENDOR NAME	VENDOR DWG NO.	VENDOR SHEET NO.	REV	DATE	VENDOR DRAWING TITLE
9.13	OMS/TVC SIGNAL FLOW AND DRIVERS	R.I.	VS70-430309	8	E	8/23/88	OMS SUBSYSTEM CONTROL - LEFT POD (OV - 103 & SUBS)
		R.I.	VS70-420302	8	E	8/23/88	OMS SUBSYSTEM CONTROL - LEFT POD (OV - 102)
		R.I.	VS70-430209	8	B	8/25/82	OMS SUBSYSTEM CONTROL - RIGHT POD (OV - 103 & SUBS)
		R.I.	VS70-430202	8	E	8/1/84	OMS SUBSYSTEM CONTROL - RIGHT POD (OV - 102)
		NASA/ JOHNSON SPACE CENTER	JSC-08934 VOL. I-A	-	F	10/87	SHUTTLE OPERATIONAL DATA BOOK, VOLUME I-A, SHUTTLE SYSTEMS ELECTRICAL EQUIPMENT LIST
9.14	ME AND SRB TVC ACTUATORS	MOOG	A05268	1-2 OF 2	-	7/2/75	HYDRAULIC SCHEMATIC SRB SERVOACTUATOR MODEL 17-310
		MOOG	A05271	1 OF 1	-	7/13/75	ASSEMBLY SRB SERVOACTUATOR MODEL 17-310
		UNITED TECH-NOLOGIES	10400-0833	10 OF 73	-	1/21/87	O. F. ELECTRICAL SCHEMATIC SOLID ROCKET BOOSTER POWER DISTRIBUTION SIGNAL CONDITIONERS
				15 OF 73	-	1/26/87	O. F. ELECTRICAL SCHEMATIC SOLID ROCKET BOOSTER THRUST VECTOR CONTROL - ROCK ACTUATOR
				17 OF 73	-	1/21/87	O. F. ELECTRICAL SCHEMATIC SOLID ROCKET BOOSTER THRUST VECTOR CONTROL-TILT ACTUATOR
		NASA/ MARSHALL SPACE FLIGHT CENTER	16A10241	16 OF 70	8	7/18/76	SRB O. F. ELECTRICAL SCHEMATIC THRUST VECTOR CONTROL ROCK ACTUATOR
				18 OF 70	B	7/17/76	SRB O. F. ELECTRICAL SCHEMATIC THRUST VECTOR CONTROL TILT ACTUATOR
		R.I.	MC621-0015	1-72 OF 72	B	7/27/76	SPECIFICATION SEROACTUATOR, MAIN ENGINE, GIMBAL, ELECTR-COMMAND HYDRAULIC (TYC)
9.15	ME & SRB TVC SIGNAL FLOW	R.I.	VS70-790209	3	C	12/4/84	DISPLAY & CONTROL SWITCHES FLIGHT CONTROL SUBSYSTEM(OV - 103 & SUBS)
		R.I.	VS70-790239	ALL	E	5/8/84	ATVC - FLT CONTROL SUBSYSTEM (OV - 103 & SUBS)
		R.I.	VS70-790232	ALL	E	10/82	ATVC - FLT CONTROL SUBSYSTEM (OV - 102)
		R.I.	VS70-790202	9	E	12/84	DISPLAY & CONTROL SWITCHES FLIGHT CONTROL SUBSYSTEM (OV - 102)
9.16 (SHEETS 1 AND 2)	AERO SURFACE ACUATORS	MOOG	A20537	-	-	5/17/78	ELEVON
		R.I.	MC621-0014	-	-	12/22/80	ELEVON SPEC.
		SUNDSTRAND AVIATION	EP6024-6	-	-	8/12/74	RUDDER/SPEEDBRAKE
		MOOG	A241288	-	-	2/21/78	RUDDER/SPEEDBRAKE
		R.I.	MC621-0053	-	-	10/20/82	RUDDER SPEEDBRAKE SPEC
		SUNDSTRAND AVIATION	EP6038-2001	-	-	11/4/74	BODY FLAP
		R.I.	MC621-0056	-	-	5/15/82	BODY FLAP SPEC
		R.I.	SD72-SH-0105 VOL.1, BOOK 2, APPENDIX A	-	-	12/15/76	REQUIREMENTS/DEFINITION DOCUMENT, FLIGHT CONTROL APPENDIX A - ACTIVATION SUBSYSTEM

DWG	SIGNATURE	DATE	DWG	SIGNATURE	DATE
9.13	ENGR L. STALLARD			ENGR	
	ENGR Lawrence Stallard	9/22/94		ENGR	
9.14	ENGR D. J. GRUBER			ENGR	
	ENGR David J. Gruber	9/22/94		ENGR	
9.15	ENGR D. J. GRUBER			APP Stanley J. Scharf	9/26/94
	ENGR David J. Gruber	9/22/94		APP	
9.16	ENGR L. STALLARD			APP	
	ENGR Lawrence Stallard	9/22/94		LTR E	PCN 4

NATIONAL AERONAUTICS AND SPACE ADMINISTRATION
LYNDON B. JOHNSON SPACE CENTER HOUSTON, TEXAS

VENDOR DRAWING REFERENCES

SPACE SHUTTLE | TBL NO 9-I
ALL

BASIC REV E-4

FOR DETAILED COMPONENT AND LOGIC INFORMATION REFER TO:

SSSH DWG NO.	SSSH DWG TITLE	VENDOR NAME	VENDOR DWG NO.	VENDOR SHEET NO.	REV	DATE	VENDOR DRAWING TITLE
9.17	RHC/SBTC/RPTA/THC	R.I.	VS70-790129	---	B	05/27/84	ROTATION HAND CONTROL. FLT CONTROL SUBSYSTEM
		R.I.	VS70-790139	---	---	11/17/80	SPEED BRAKE THRUST CONTROL FLT CONTROL SUBSYSTEM
		R.I.	VS70-790149	---	---	11/05/80	RUDDER PEDAL XDCR ASSY FLT CONTROL SUBSYSTEM
		R.I.	VS70-790159	---	---	01/14/81	TRANSLATION HAND CONTROL FLT CONTROL SUBSYSTEM
		R.I.	VS70-790209	---	C	08/17/84	DISPLAY AND CONTROL SWITCHES FLIGHT CONTROL SUBSYSTEM
9.20	HEAD UP DISPLAY	R.I.	VS70-730269	ALL	E	8/09/84	HEADS UP DISPLAY SUBSYSTEM
		KAISER	03944-65002	ALL	---	9/20/80	PDV BLOCK DIAGRAM
		KAISER	03944-65005	ALL	---	---	HUD EXTERNAL INTERCONNECT
		KAISER	03944-65091	ALL	---	4/15/81	PDU INTERCONNECT
		KAISER	03944-65501	ALL	---	1981	HUDE SYSTEM BLOCK DIAGRAM
		KAISER	03944-65701	ALL	---	1/21/81	LOW VOLTAGE POWER SUPPLY

DWG	SIGNATURE	DATE	DWG	SIGNATURE	DATE
9.17	ENGR S. M. SPRUELL			ENGR	
	ENGR S. M. Spruell	9-11-90		ENGR	
9.20	ENGR M. T. SEVERANCE			ENGR	
	ENGR Mark T. Severance	11 SEP 90		ENGR	
	ENGR			APP Stephen J. Elsner	9/11/90
	ENGR			APP John A. Kammann	9/11/90
	ENGR			OMNIPLAN	
	ENGR			LTR E PCN	

NATIONAL AERONAUTICS AND SPACE ADMINISTRATION
LYNDON B. JOHNSON SPACE CENTER HOUSTON, TEXAS

VENDOR DRAWING REFERENCES

SPACE SHUTTLE | TBL NO 9-I

ALL

BASIC REV E

JSC–11174

Space Shuttle Systems Handbook

Volume I

Sections 1 through 9

Rev E, DCN–6
August 14, 1996

SD
MOD
JSC
NASA